MISSOURI HIGHWAYS AND TRANSPORTATION COMMISSION
PLANS FOR PROPOSED
STATE HIGHWAY
JEFFERSON COUNTY

DESIGN DESIGNATION

A.A.D.T. - 2016 = 53,147
A.A.D.T. - 2036 = 59,311
T = 18%
V = 70 M.P.H.
FUNCTIONAL CLASSIFICATION- INTERSTATE

NO NEW RIGHT OF WAY WILL BE ACQUIRED

DISCLAIMER
THE PROFESSIONAL WHOSE SIGNATURE AND PERSONAL SEAL APPEAR HEREON ASSUMES RESPONSIBILITY ONLY FOR WHAT APPEARS ON THIS PAGE, AND DISCLAIMS (PURSUANT TO SECTION 327.411 RSMO) SPECIFICATION, ESTIMATES, REPORTS, OR OTHER DOCUMENTS OR INSTRUMENTS NOT SEALED BY THE UNDERSIGNED PROFESSIONAL RELATING TO OR INTENDED TO BE USED FOR ANY PART OR PARTS OF THE PROJECT TO WHICH THIS PAGE REFERS.

THE EXISTENCE AND APPROXIMATE LOCATION OF UTILITY FACILITIES KNOWN TO EXIST, AS SHOWN ON THE PLANS, ARE BASED ON THE BEST INFORMATION AVAILABLE TO THE COMMISSION AT THIS TIME. THIS INFORMATION IS PROVIDED BY THE COMMISSION "AS-IS" AND THE COMMISSION EXPRESSLY DISCLAIMS ANY REPRESENTATION OR WARRANTY AS TO THE COMPLETENESS, ACCURACY, OR SUITABILITY OF THE INFORMATION FOR ANY USE. RELIANCE UPON THIS INFORMATION IS DONE AT THE RISK AND PERIL OF THE USER, AND THE COMMISSION SHALL NOT BE LIABLE FOR ANY DAMAGES THAT MAY ARISE FROM ANY ERROR IN THE INFORMATION.

BEGIN PROJECT STA. 594+26.9

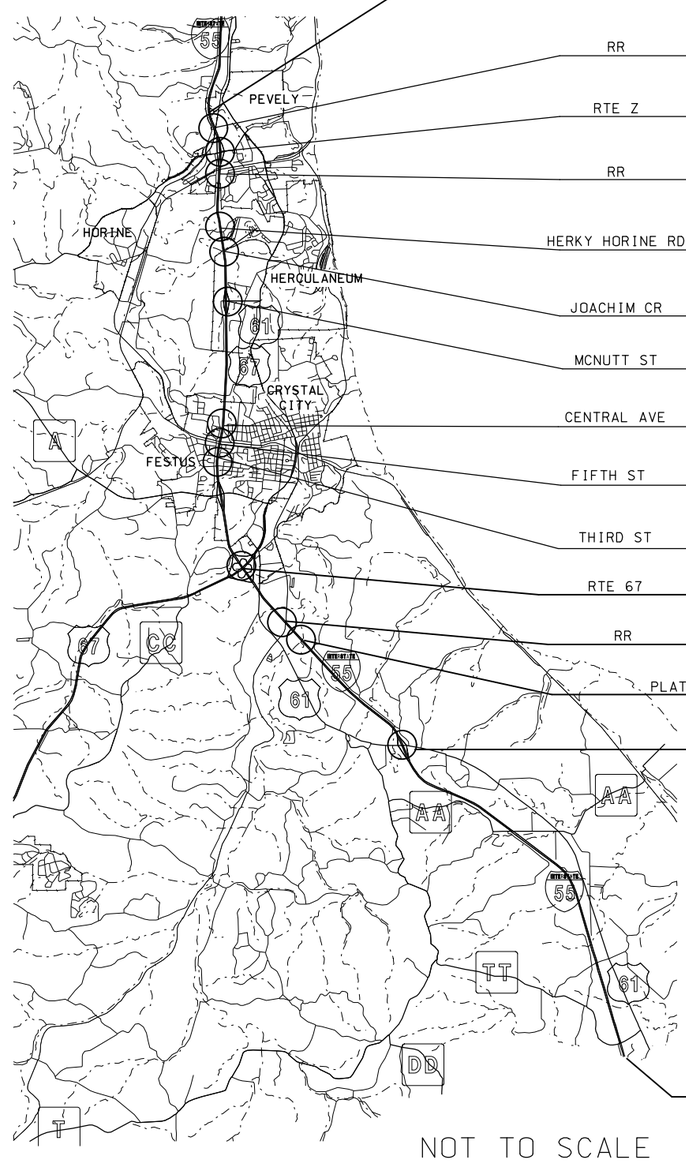

RR	BRIDGE EXCEPTION	#A1035 SB 55
RTE Z	BRIDGE EXCEPTION	#A0951 TWINS
RR	BRIDGE EXCEPTION	#A0953 TWINS
HERKY HORINE RD	BRIDGE EXCEPTION	#A0944 TWINS
JOACHIM CR	BRIDGE EXCEPTION	#A0945 TWINS
MCNUTT ST	BRIDGE EXCEPTION	#A0946 TWINS
CENTRAL AVE	BRIDGE EXCEPTION	#A0797 TWINS
FIFTH ST	BRIDGE EXCEPTION	#A0786 TWINS
THIRD ST	BRIDGE EXCEPTION	#A0830 TWINS
RTE 67	BRIDGE EXCEPTION	#A0799 TWINS
RR	BRIDGE EXCEPTION	#A2221 TWINS
PLATTIN CR	BRIDGE EXCEPTION	#A2222 TWINS
RTE 61	BRIDGE EXCEPTION	#A2223 TWINS

I-55 NORTHBOUND & SOUTHBOUND LANES (16.000 MILES)
COLD MILL & RESURFACE

END PROJECT STA. 1460+00

NOT TO SCALE

CONVENTIONAL SYMBOLS
(USED IN PLANS)

	EXISTING	NEW
BUILDINGS AND STRUCTURES		
GUARD RAIL		
CONCRETE RIGHT-OF-WAY MARKER		
STEEL RIGHT-OF-WAY MARKER		
LOCATION SURVEY MARKER		
UTILITIES		
FIBER OPTICS	FO	FO
OVERHEAD TELEPHONE		
UNDERGROUND TELEPHONE	T	T
OVERHEAD POWER		
UNDERGROUND POWER	P	P
GAS	G	G
WATER	W	W
MANHOLE	SAN	
FIRE HYDRANT	HYD	
WATER VALVE	WV	
WATER METER	WM	
DROP INLET	DI	
DITCH BLOCK		
GROUND MOUNTED SIGN	SIGN	
LIGHT POLE		
H-FRAME POWER POLE		
TELEPHONE PEDESTAL	PED	
FENCE		
CHAIN LINK	V	
WOVEN WIRE	X	
GATE POST		
BENCHMARK	BM	

NOTE: DASHED OR OPEN SYMBOLS INDICATE EXISTING FEATURES

INDEX OF SHEETS

DESCRIPTION	SHEET NUMBER
TITLE SHEET	1
TYPICAL SECTIONS (TS) (9 SHEETS)	2
QUANTITIES (QU) (7 SHEETS)	3
PLAN-PROFILE (PP)	4-36
TRAFFIC CONTROL SHEETS (TC)	37-42
PVMT MARKING & EROSION CONTROL (PM-EC)	43-75
SIGNING SHEETS (SN)	76-95

LENGTH OF PROJECT

BEGINNING OF PROJECT STA. 594+26.9
END OF PROJECT STA. 1460+00.0

APPARENT LENGTH 86573.10 FEET

EQUATIONS

Back		Ahead	
841+83.60	=	839+04.00	+279.60
1223+02.11	=	1219+56.30	+345.81
1249+98.95	=	1250+00.59	-1.64
1298+33.92	=	1298+37.15	-3.23
1322+73.81	=	1322+75.11	-1.30
1374+68.61	=	1374+71.16	-2.55
1417+12.82	=	1417+14.66	-1.84
1441+70.00	=	1441+71.39	-1.39
1453+26.59	=	1453+27.18	-0.59
		TOTAL	+612.87

EXCEPTIONS

Bridge	Crossroad	Length	Exception
A1035	RR	270.00	-270.00
A0951	RTE Z	146.00	-146.00
A0953	RR	152.00	-152.00
A0944	HERKY HORINE	143.00	-143.00
A0945	JOACHIM CR	400.00	-400.00
A0946	MCNUTT ST	132.00	-132.00
A0797	CENTRAL AVE	160.00	-160.00
A0786	FIFTH ST	278.00	-278.00
A0830	THIRD ST	134.00	-134.00
A0799	RTE 67	196.00	-196.00
A2221	RR	187.00	-187.00
A2222	PLATTIN CR	228.00	-228.00
A2223	RTE 61	147.00	-147.00
A1991	ISLE DUBOIS CREEK	131.00 (PARTIAL)	-131.00
		TOTAL	-2704.00

TOTAL CORRECTIONS -2091.13 FEET
NET LENGTH OF PROJECT 84481.97 FEET
STATE LENGTH 16.000 MILES

STATE OF MISSOURI
SHIRLEY J. NORRIS
NUMBER PE-28779
PROFESSIONAL ENGINEER
THIS SHEET HAS BEEN SIGNED, SEALED AND DATED ELECTRONICALLY.

DATE PREPARED 9/29/2016

ROUTE	STATE
I-55	MO
DISTRICT	SHEET NO.
SL	1

COUNTY JEFFERSON
JOB NO. J6I3110
CONTRACT ID.
PROJECT NO.
BRIDGE NO.

DATE	DESCRIPTION

IF A SEAL IS PRESENT ON THIS SHEET IT HAS BEEN ELECTRONICALLY SEALED AND DATED.

MISSOURI HIGHWAYS AND TRANSPORTATION COMMISSION
105 WEST CAPITOL
JEFFERSON CITY, MO 65102
1-888-ASK-MODOT (1-888-275-6636)

TITLE SHEET

REV.

NOTES:

MATCH ALL EXIST. CROSS SLOPES

FROM STA.937+26 TO 940+65.84 ON SB I-55 DECELERATION LANE TO RAMP 2 ON SB RTE 67 WILL HAVE A HIGH FRICTION SURFACE TREATMENT (SEE PLAN SHEET 16 & 17)

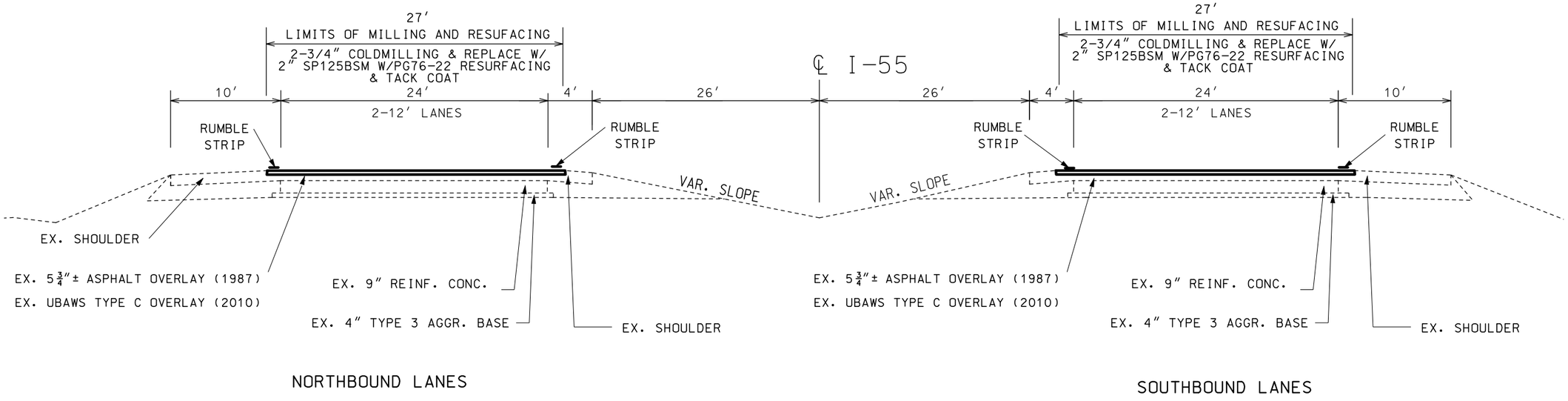

I-55 TYPICAL SECTION

PROJECT LIMITS

NOT TO SCALE

APPLICATION RATE

SP125BSM W/PG 76-22 = 1.944 TON/CY

TACK COAT = 0.1 GAL/S.Y.

DISCLAIMER

THE PROFESSIONAL WHOSE SIGNATURE AND PERSONAL SEAL APPEAR HEREON ASSUMES RESPONSIBILITY ONLY FOR WHAT APPEARS ON THIS PAGE, AND DISCLAIMS (PURSUANT TO SECTION 327.411 RSMO) SPECIFICATION, ESTIMATES, REPORTS, OR OTHER DOCUMENTS OR INSTRUMENTS NOT SEALED BY THE UNDERSIGNED PROFESSIONAL RELATING TO OR INTENDED TO BE USED FOR ANY PART OR PARTS OF THE PROJECT TO WHICH THIS PAGE REFERS.

STATE OF MISSOURI
SHIRLEY J. NORRIS
NUMBER PE-28779
PROFESSIONAL ENGINEER

THIS SHEET HAS BEEN SIGNED, SEALED AND DATED ELECTRONICALLY.

DATE PREPARED	9/29/2016
ROUTE	I-55
STATE	MO
DISTRICT	SL
SHEET NO.	2
COUNTY	JEFFERSON
JOB NO.	J6I3110
CONTRACT ID.	
PROJECT NO.	
BRIDGE NO.	

DATE	DESCRIPTION

MISSOURI HIGHWAYS AND TRANSPORTATION COMMISSION

105 WEST CAPITOL
JEFFERSON CITY, MO 65102
1-888-ASK-MODOT (1-888-275-6636)

TYPICAL SECTION SHEET
SHEET 1 OF 9

IF A SEAL IS PRESENT ON THIS SHEET IT HAS BEEN ELECTRONICALLY SEALED AND DATED.

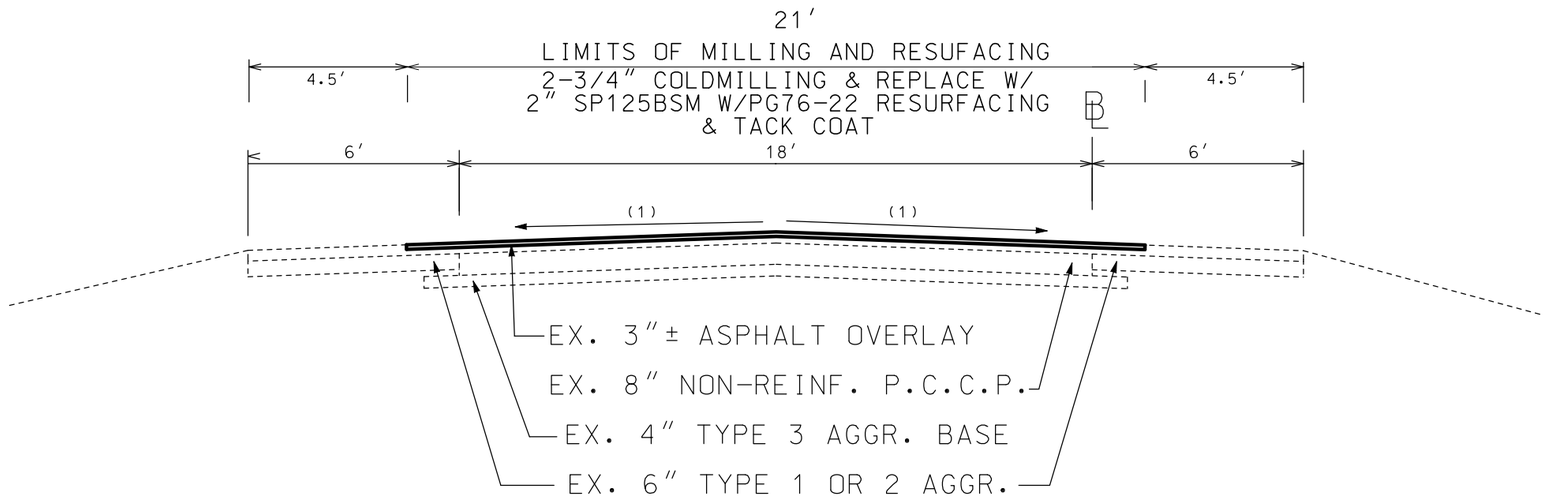

TYPICAL SECTION

McNUTT – RAMPS 1, 2, 3, 4

(SEE PLAN SHEETS FOR LOC.)

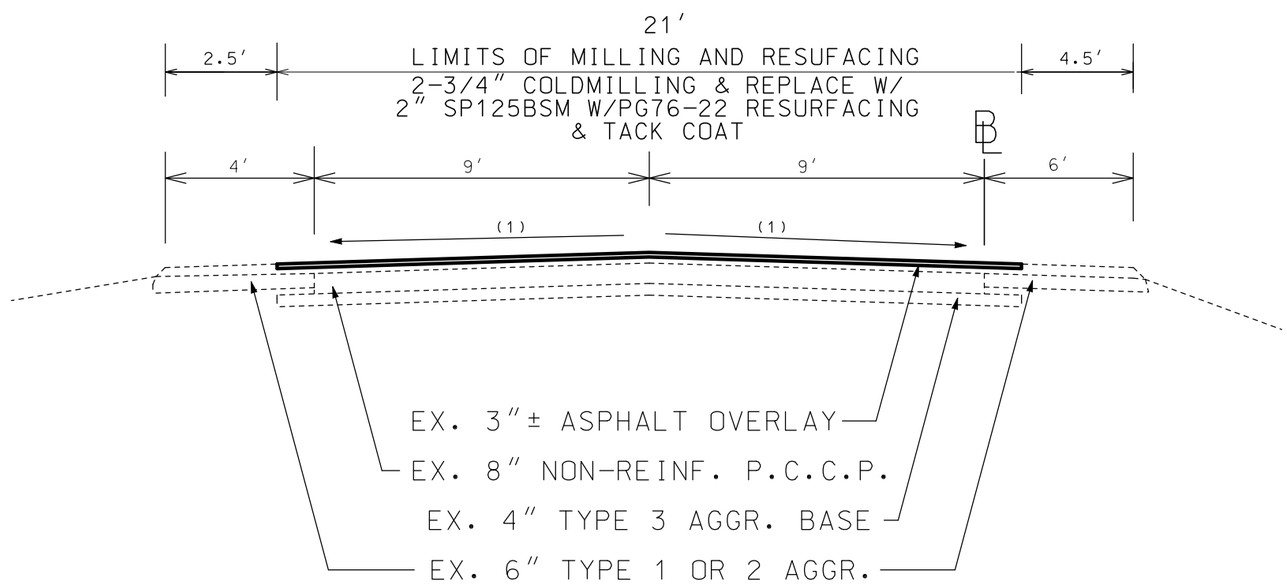

TYPICAL SECTION

ROUTE A – RAMPS 1, 2, 3, 4

(SEE PLAN SHEETS FOR LOC.)

(1) MATCH EXIST. CROSS SLOPE; NO S.E. CORRECTION

DISCLAIMER

THE PROFESSIONAL WHOSE SIGNATURE AND PERSONAL SEAL APPEAR HEREON ASSUMES RESPONSIBILITY ONLY FOR WHAT APPEARS ON THIS PAGE, AND DISCLAIMS (PURSUANT TO SECTION 327.411 RSMO) SPECIFICATION, ESTIMATES, REPORTS, OR OTHER DOCUMENTS OR INSTRUMENTS NOT SEALED BY THE UNDERSIGNED PROFESSIONAL RELATING TO OR INTENDED TO BE USED FOR ANY PART OR PARTS OF THE PROJECT TO WHICH THIS PAGE REFERS.

STATE OF MISSOURI
SHIRLEY J. NORRIS
NUMBER PE-28779
PROFESSIONAL ENGINEER

THIS SHEET HAS BEEN SIGNED, SEALED AND DATED ELECTRONICALLY.

IF A SEAL IS PRESENT ON THIS SHEET IT HAS BEEN ELECTRONICALLY SEALED AND DATED.

DATE PREPARED	9/29/2016
ROUTE	I-55
STATE	MO
DISTRICT	SL
SHEET NO.	2
COUNTY	JEFFERSON
JOB NO.	J6I3110
CONTRACT ID.	
PROJECT NO.	
BRIDGE NO.	

DATE	DESCRIPTION

MISSOURI HIGHWAYS AND TRANSPORTATION COMMISSION

105 WEST CAPITOL
JEFFERSON CITY, MO 65102
1-888-ASK-MODOT (1-888-275-6636)

TYPICAL SECTION SHEET
SHEET 2 OF 9

REV.

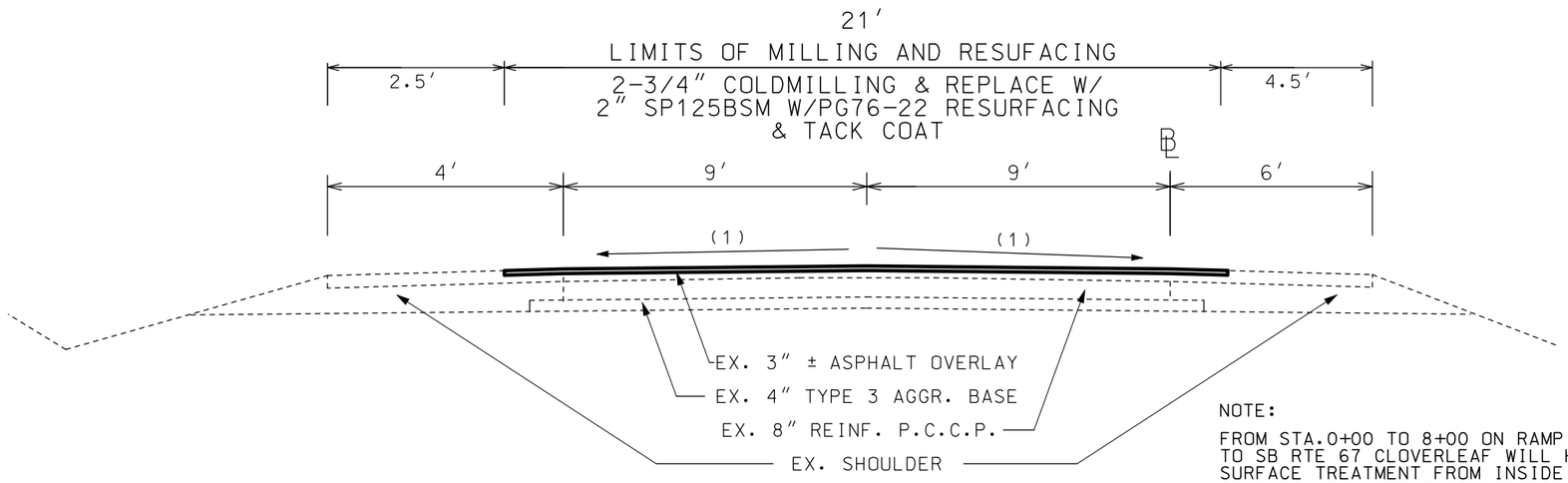

NOTE:

FROM STA.0+00 TO 8+00 ON RAMP 2 FROM SB I-55 TO SB RTE 67 CLOVERLEAF WILL HAVE A HIGH FRICTION SURFACE TREATMENT FROM INSIDE YELLOW EDGE STRIPE TO OUTSIDE WHITE EDGE STRIPE (SEE PLAN SHEET 17)

TYPICAL SECTION

ROUTE 67 CLOVERLEAF (RAMPS 1,2,7,8)

ROUTE Z (RAMPS 1-4)

(SEE PLAN SHEETS FOR LOC.)

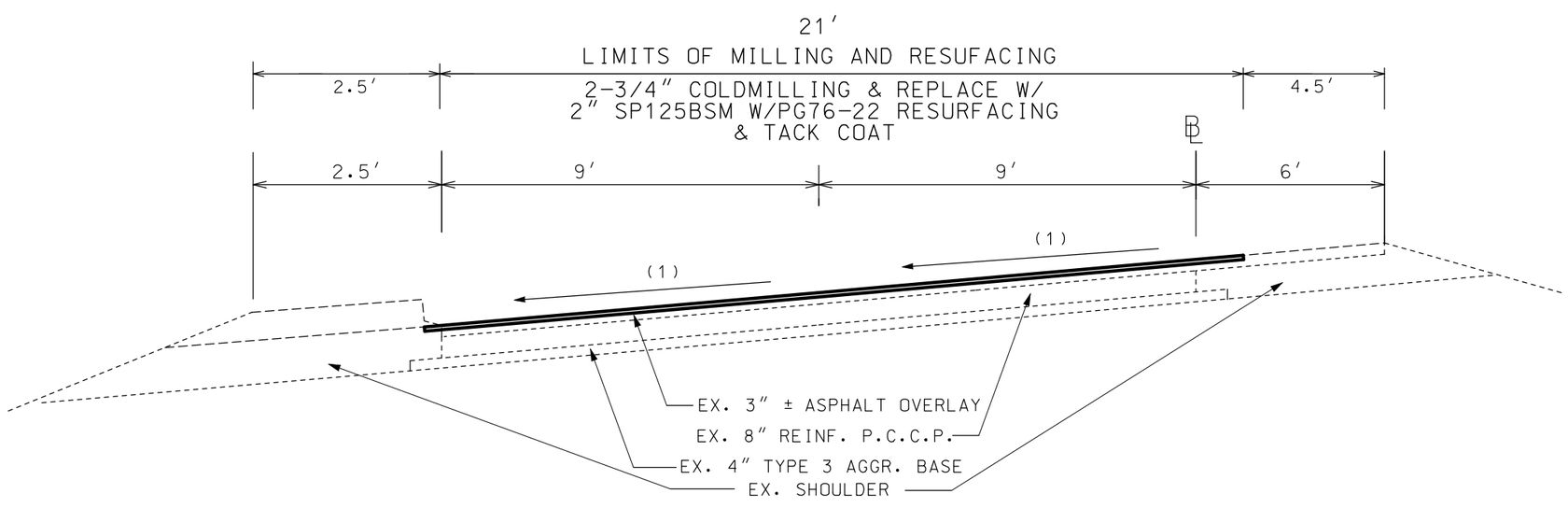

TYPICAL SECTION

ROUTE 67 CLOVERLEAF (RAMPS 3,4,5,6)

(SEE PLAN SHEETS FOR LOC.)

(1) MATCH EXIST. CROSS SLOPE; NO S.E. CORRECTION

DISCLAIMER

THE PROFESSIONAL WHOSE SIGNATURE AND PERSONAL SEAL APPEAR HEREON ASSUMES RESPONSIBILITY ONLY FOR WHAT APPEARS ON THIS PAGE, AND DISCLAIMS (PURSUANT TO SECTION 327.411 RSMO) SPECIFICATION, ESTIMATES, REPORTS, OR OTHER DOCUMENTS OR INSTRUMENTS NOT SEALED BY THE UNDERSIGNED PROFESSIONAL RELATING TO OR INTENDED TO BE USED FOR ANY PART OR PARTS OF THE PROJECT TO WHICH THIS PAGE REFERS.

STATE OF MISSOURI
SHIRLEY J. NORRIS
NUMBER PE-28779
PROFESSIONAL ENGINEER

THIS SHEET HAS BEEN SIGNED, SEALED AND DATED ELECTRONICALLY.

DATE PREPARED: 9/29/2016

ROUTE	STATE
I-55	MO
DISTRICT	SHEET NO.
SL	2

COUNTY: JEFFERSON

JOB NO.: J6I3110

CONTRACT ID.

PROJECT NO.

BRIDGE NO.

DATE	DESCRIPTION

MISSOURI HIGHWAYS AND TRANSPORTATION COMMISSION

105 WEST CAPITOL
JEFFERSON CITY, MO 65102
1-888-ASK-MODOT (1-888-275-6636)

TYPICAL SECTION SHEET
SHEET 3 OF 8

IF A SEAL IS PRESENT ON THIS SHEET IT HAS BEEN ELECTRONICALLY SEALED AND DATED.

REV.

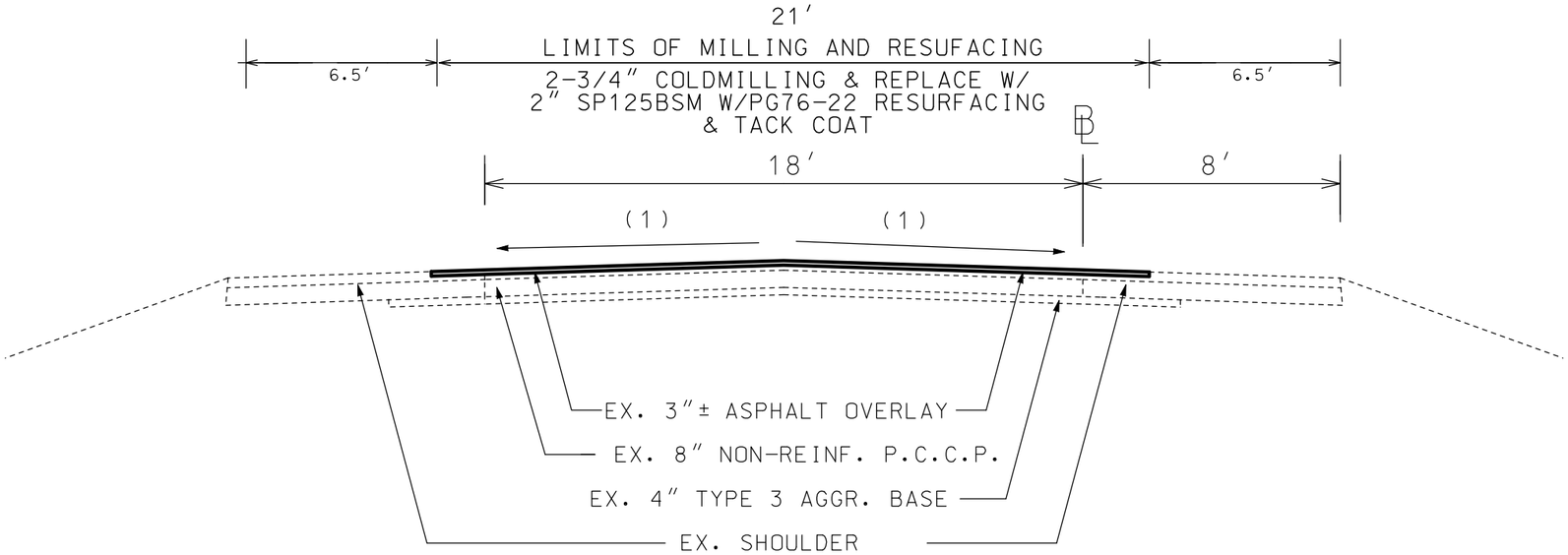

TYPICAL SECTION

ROUTE 61- RAMP 1

(SEE PLAN SHEETS FOR LOC.)

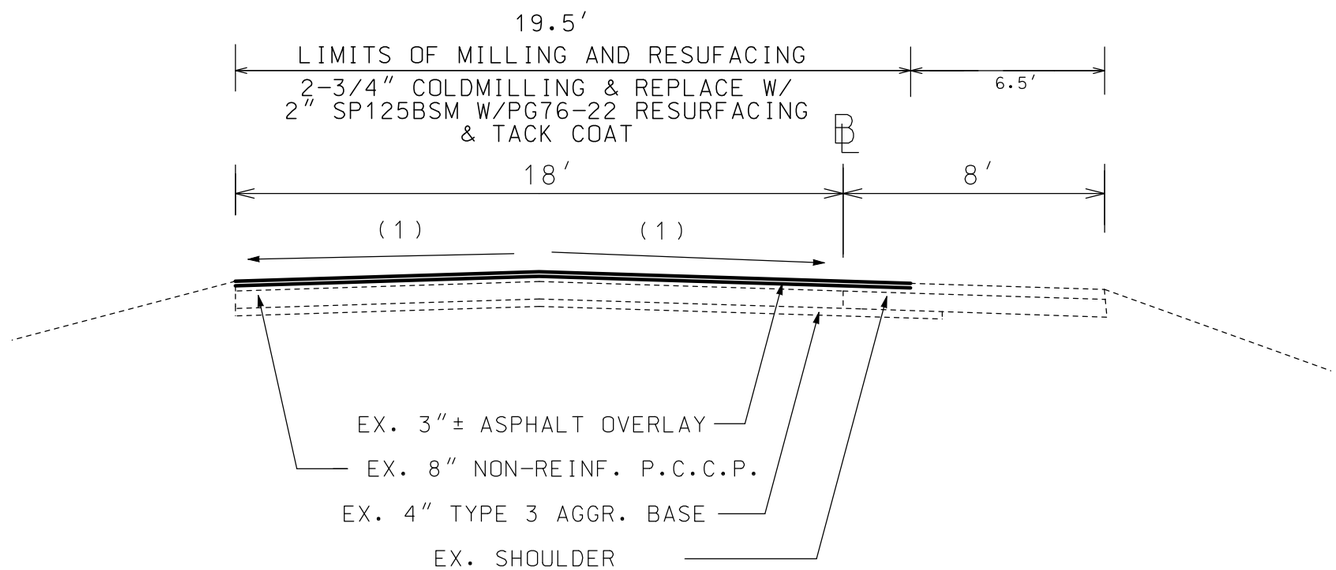

TYPICAL SECTION

ROUTE 61- RAMPS 2,3 & 4

(SEE PLAN SHEETS FOR LOC.)

(1) MATCH EXIST. CROSS SLOPE; NO S.E. CORRECTION

DISCLAIMER
THE PROFESSIONAL WHOSE SIGNATURE AND PERSONAL SEAL APPEAR HEREON ASSUMES RESPONSIBILITY ONLY FOR WHAT APPEARS ON THIS PAGE, AND DISCLAIMS (PURSUANT TO SECTION 327.411 RSMO) SPECIFICATION, ESTIMATES, REPORTS, OR OTHER DOCUMENTS OR INSTRUMENTS NOT SEALED BY THE UNDERSIGNED PROFESSIONAL RELATING TO OR INTENDED TO BE USED FOR ANY PART OR PARTS OF THE PROJECT TO WHICH THIS PAGE REFERS.

STATE OF MISSOURI
SHIRLEY J. NORRIS
NUMBER PE-28779
PROFESSIONAL ENGINEER
THIS SHEET HAS BEEN SIGNED, SEALED AND DATED ELECTRONICALLY.

IF A SEAL IS PRESENT ON THIS SHEET IT HAS BEEN ELECTRONICALLY SEALED AND DATED.

DATE PREPARED	
9/29/2016	
ROUTE	STATE
I-55	MO
DISTRICT	SHEET NO.
SL	2
COUNTY	
JEFFERSON	
JOB NO.	
J6I3110	
CONTRACT ID.	
PROJECT NO.	
BRIDGE NO.	

DATE	DESCRIPTION

MISSOURI HIGHWAYS AND TRANSPORTATION COMMISSION
105 WEST CAPITOL
JEFFERSON CITY, MO 65102
1-888-ASK-MODOT (1-888-275-6636)

TYPICAL SECTION SHEET
SHEET 4 OF 9

REV.

COLDMILLING & RESURFACING AT BRIDGES

(SEE COMBINATION PROJECT J6I3131 FOR BRIDGE REHABILITATION DETAILS)

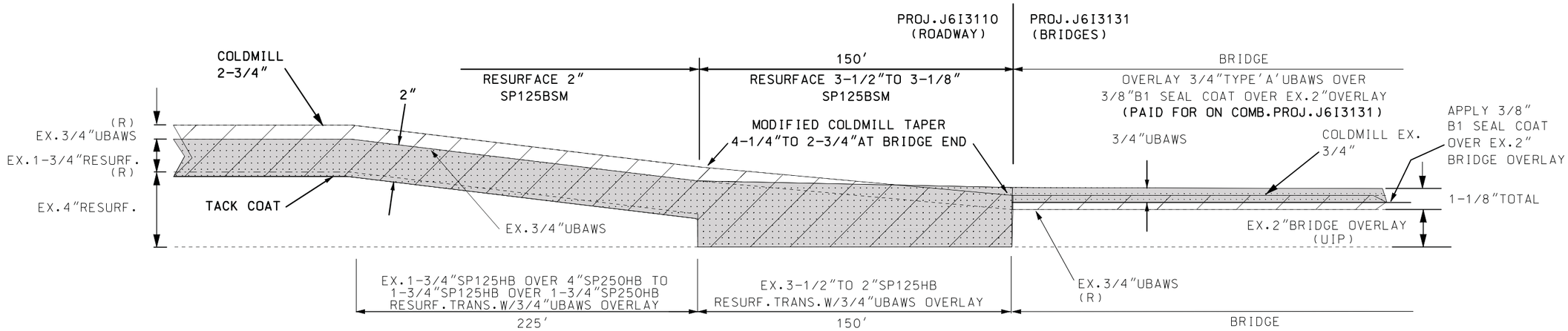

TYPICAL MILL/FILL AT BRIDGE

@ BRIDGES OVER

BNSF R.R.(SB)
RTE. Z
UNION PACIFIC R.R.
HERKY HORINE RD.
JOACHIM CREEK
MCNUTT RD.

COLDMILLING

RESURFACING/OVERLAY

RESURFACING/OVERLAY

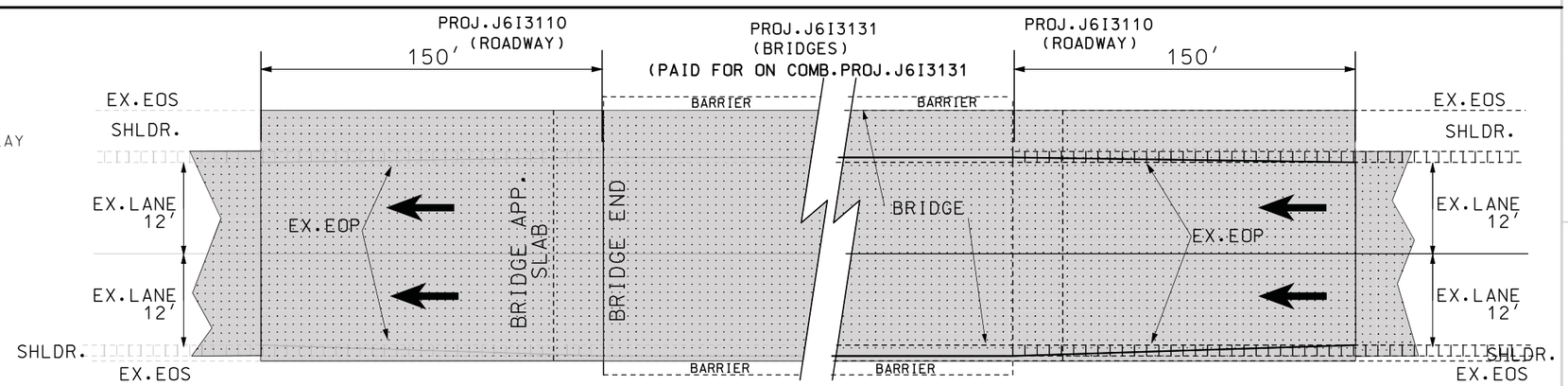

TEMP.TRAFFIC CONTROL TAPER AT BRIDGES

NOT TO SCALE

DISCLAIMER
THE PROFESSIONAL WHOSE SIGNATURE AND PERSONAL SEAL APPEAR HEREON ASSUMES RESPONSIBILITY ONLY FOR WHAT APPEARS ON THIS PAGE, AND DISCLAIMS (PURSUANT TO SECTION 327.411 RSMO) SPECIFICATION, ESTIMATES, REPORTS, OR OTHER DOCUMENTS OR INSTRUMENTS NOT SEALED BY THE UNDERSIGNED PROFESSIONAL RELATING TO OR INTENDED TO BE USED FOR ANY PART OR PARTS OF THE PROJECT TO WHICH THIS PAGE REFERS.

STATE OF MISSOURI
SHIRLEY J. NORRIS
NUMBER PE-28779
PROFESSIONAL ENGINEER

THIS SHEET HAS BEEN SIGNED, SEALED AND DATED ELECTRONICALLY.

DATE PREPARED	
9/29/2016	
ROUTE	STATE
I-55	MO
DISTRICT	SHEET NO.
SL	2
COUNTY	
JEFFERSON	
JOB NO.	
J6I3110	
CONTRACT ID.	
PROJECT NO.	
BRIDGE NO.	

DESCRIPTION

IF A SEAL IS PRESENT ON THIS SHEET IT HAS BEEN ELECTRONICALLY SEALED AND DATED.

MISSOURI HIGHWAYS AND TRANSPORTATION COMMISSION

105 WEST CAPITOL
JEFFERSON CITY, MO 65102
1-888-ASK-MODOT (1-888-275-6636)

TYPICAL SECTION SHEET
SHEET 5 OF 9

COLDMILLING & RESURFACING AT BRIDGES

(SEE COMBINATION PROJECT J6I3131 FOR BRIDGE REHABILITATION DETAILS)

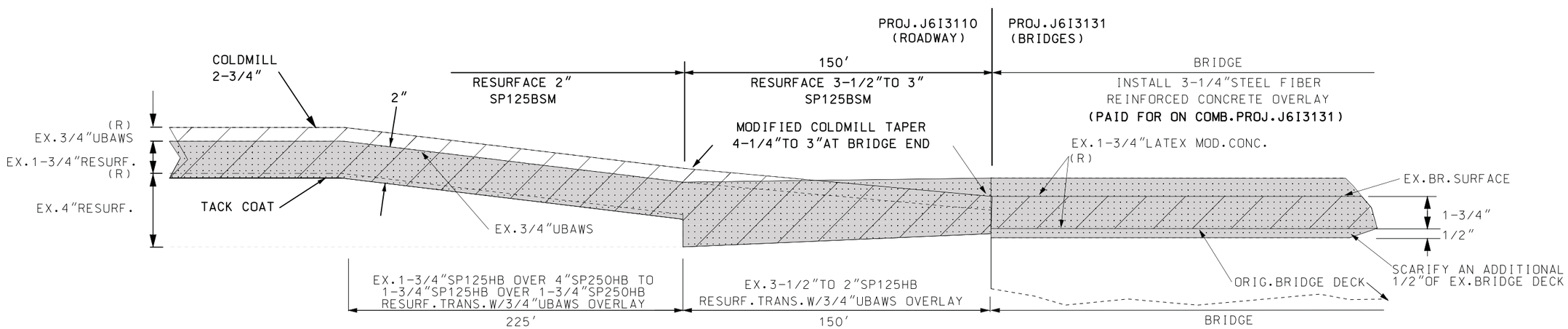

TYPICAL MILL/FILL AT BRIDGE

@ BRIDGE OVER

CENTRAL AVE.
THIRD STREET

COLDMILLING

RESURFACING/OVERLAY

RESURFACING/OVERLAY

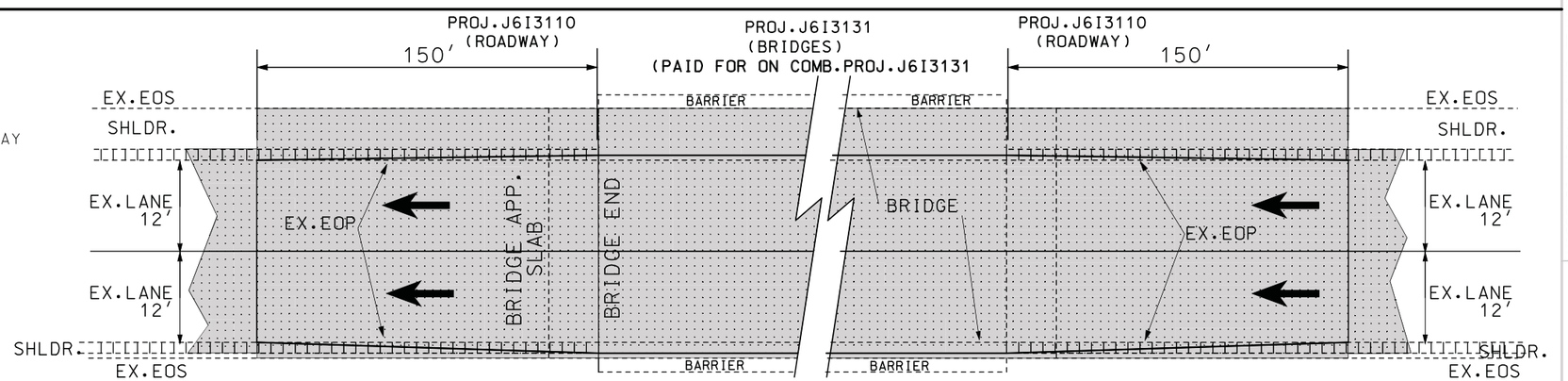

TEMP.TRAFFIC CONTROL TAPER AT BRIDGES

NOT TO SCALE

DISCLAIMER
THE PROFESSIONAL WHOSE SIGNATURE AND PERSONAL SEAL APPEAR HEREON ASSUMES RESPONSIBILITY ONLY FOR WHAT APPEARS ON THIS PAGE, AND DISCLAIMS (PURSUANT TO SECTION 327.411 RSMO) SPECIFICATION, ESTIMATES, REPORTS, OR OTHER DOCUMENTS OR INSTRUMENTS NOT SEALED BY THE UNDERSIGNED PROFESSIONAL RELATING TO OR INTENDED TO BE USED FOR ANY PART OR PARTS OF THE PROJECT TO WHICH THIS PAGE REFERS.

STATE OF MISSOURI
SHIRLEY J. NORRIS
NUMBER PE-28779
PROFESSIONAL ENGINEER

THIS SHEET HAS BEEN SIGNED, SEALED AND DATED ELECTRONICALLY.

DATE PREPARED	9/29/2016
ROUTE	I-55
STATE	MO
DISTRICT	SL
SHEET NO.	2
COUNTY	JEFFERSON
JOB NO.	J6I3110
CONTRACT ID.	
PROJECT NO.	
BRIDGE NO.	

DESCRIPTION

DATE

IF A SEAL IS PRESENT ON THIS SHEET IT HAS BEEN ELECTRONICALLY SEALED AND DATED.

MISSOURI HIGHWAYS AND TRANSPORTATION COMMISSION

105 WEST CAPITOL
JEFFERSON CITY, MO 65102
1-888-ASK-MODOT (1-888-275-6636)

TYPICAL SECTION SHEET
SHEET 6 OF 9

COLDMILLING & RESURFACING AT BRIDGES

(SEE COMBINATION PROJECT J6I3131 FOR BRIDGE REHABILITATION DETAILS)

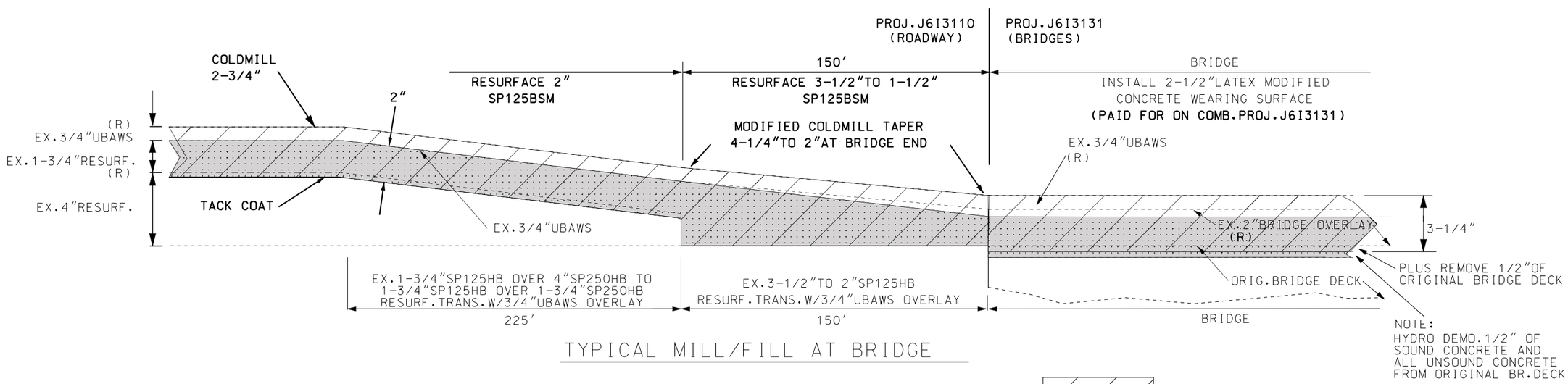

TYPICAL MILL/FILL AT BRIDGE

@ BRIDGES OVER

RTE 67
PLATTIN CREEK

COLDMILLING

RESURFACING/OVERLAY

RESURFACING/OVERLAY

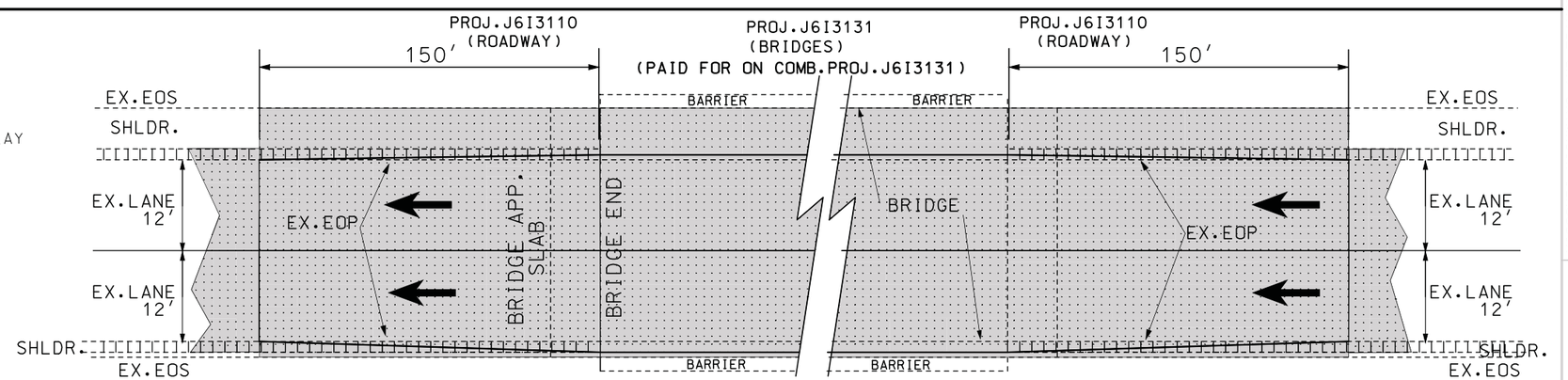

TEMP.TRAFFIC CONTROL TAPER AT BRIDGES

NOT TO SCALE

DISCLAIMER
THE PROFESSIONAL WHOSE SIGNATURE AND PERSONAL SEAL APPEAR HEREON ASSUMES RESPONSIBILITY ONLY FOR WHAT APPEARS ON THIS PAGE, AND DISCLAIMS (PURSUANT TO SECTION 327.411 RSMO) SPECIFICATION, ESTIMATES, REPORTS, OR OTHER DOCUMENTS OR INSTRUMENTS NOT SEALED BY THE UNDERSIGNED PROFESSIONAL RELATING TO OR INTENDED TO BE USED FOR ANY PART OR PARTS OF THE PROJECT TO WHICH THIS PAGE REFERS.

STATE OF MISSOURI
SHIRLEY J. NORRIS
NUMBER PE-28779
PROFESSIONAL ENGINEER

THIS SHEET HAS BEEN SIGNED, SEALED AND DATED ELECTRONICALLY.

DATE PREPARED	10/20/2016
ROUTE	I-55
STATE	MO
DISTRICT	SL
SHEET NO.	2
COUNTY	JEFFERSON
JOB NO.	J6I3110
CONTRACT ID.	
PROJECT NO.	
BRIDGE NO.	

DESCRIPTION

DATE

IF A SEAL IS PRESENT ON THIS SHEET IT HAS BEEN ELECTRONICALLY SEALED AND DATED.

MISSOURI HIGHWAYS AND TRANSPORTATION COMMISSION

105 WEST CAPITOL
JEFFERSON CITY, MO 65102
1-888-ASK-MODOT (1-888-275-6636)

TYPICAL SECTION SHEET
SHEET 7 OF 9

COLDMILLING & RESURFACING AT BRIDGES

(SEE COMBINATION PROJECT J6I3131 FOR BRIDGE REHABILITATION DETAILS)

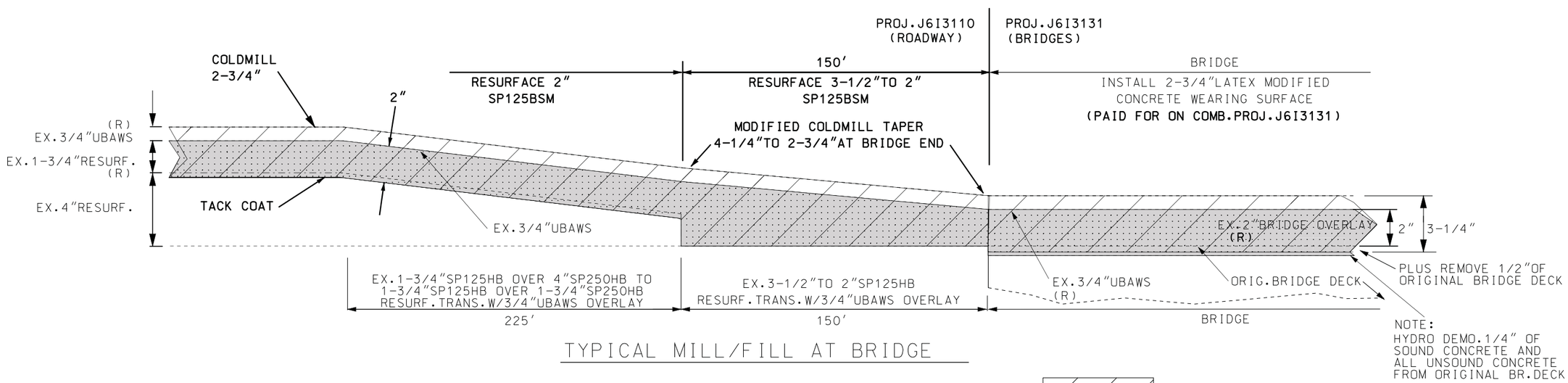

TYPICAL MILL/FILL AT BRIDGE

@ BRIDGE OVER

UNION PACIFIC RR
(@ S.END OF PROJECT)

COLDMILLING

RESURFACING/OVERLAY

RESURFACING/OVERLAY

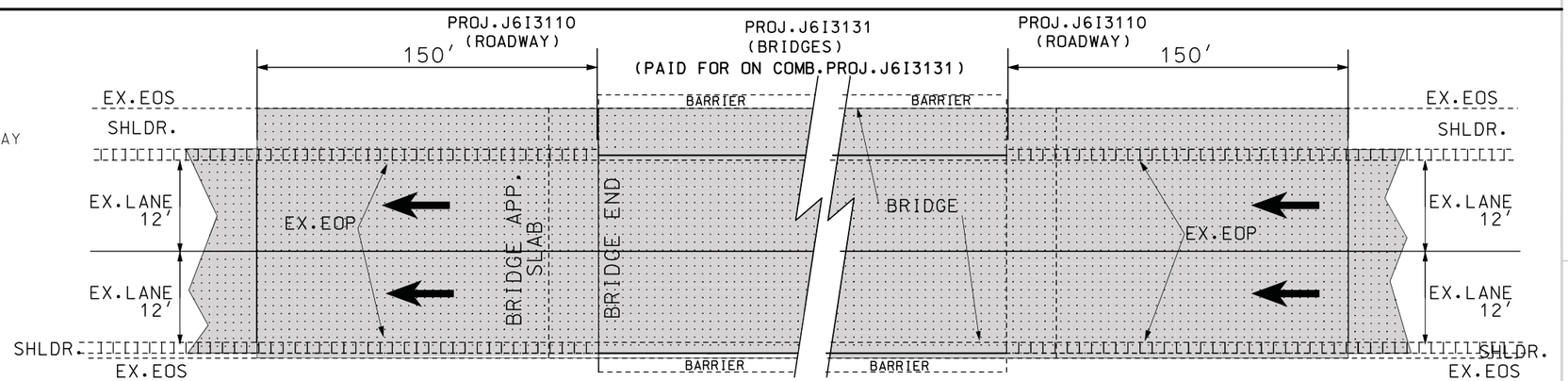

TEMP.TRAFFIC CONTROL TAPER AT BRIDGES

NOT TO SCALE

DISCLAIMER
THE PROFESSIONAL WHOSE SIGNATURE AND PERSONAL SEAL APPEAR HEREON ASSUMES RESPONSIBILITY ONLY FOR WHAT APPEARS ON THIS PAGE, AND DISCLAIMS (PURSUANT TO SECTION 327.411 RSMO) SPECIFICATION, ESTIMATES, REPORTS, OR OTHER DOCUMENTS OR INSTRUMENTS NOT SEALED BY THE UNDERSIGNED PROFESSIONAL RELATING TO OR INTENDED TO BE USED FOR ANY PART OR PARTS OF THE PROJECT TO WHICH THIS PAGE REFERS.

STATE OF MISSOURI
SHIRLEY J. NORRIS
NUMBER PE-28779
PROFESSIONAL ENGINEER

THIS SHEET HAS BEEN SIGNED, SEALED AND DATED ELECTRONICALLY.

DATE PREPARED	9/29/2016
ROUTE	I-55
STATE	MO
DISTRICT	SL
SHEET NO.	2
COUNTY	JEFFERSON
JOB NO.	J6I3110
CONTRACT ID.	
PROJECT NO.	
BRIDGE NO.	

DESCRIPTION

DATE

IF A SEAL IS PRESENT ON THIS SHEET IT HAS BEEN ELECTRONICALLY SEALED AND DATED.

MISSOURI HIGHWAYS AND TRANSPORTATION COMMISSION

105 WEST CAPITOL
JEFFERSON CITY, MO 65102
1-888-ASK-MODOT (1-888-275-6636)

TYPICAL SECTION SHEET
SHEET 8 OF 9

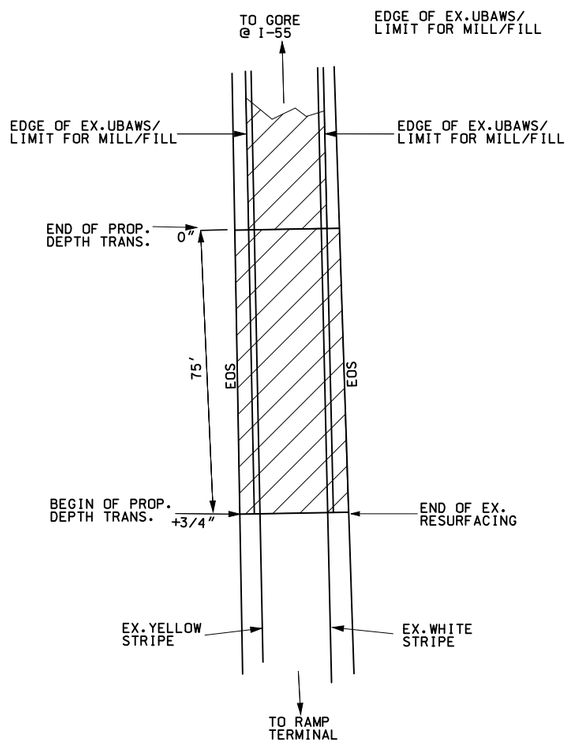

RAMP DEPTH TRANSITION DETAIL

NOT TO SCALE

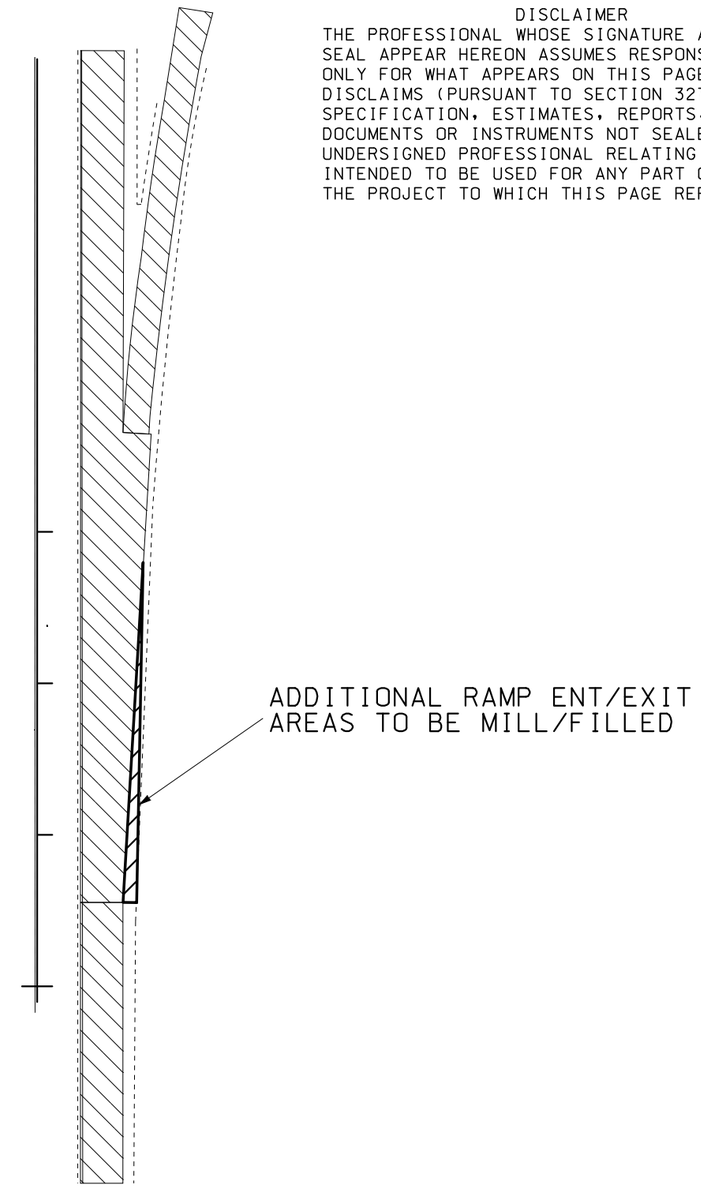

RAMP DEPTH TRANSITION DETAIL

NOT TO SCALE

DISCLAIMER

THE PROFESSIONAL WHOSE SIGNATURE AND PERSONAL SEAL APPEAR HEREON ASSUMES RESPONSIBILITY ONLY FOR WHAT APPEARS ON THIS PAGE, AND DISCLAIMS (PURSUANT TO SECTION 327.411 RSMO) SPECIFICATION, ESTIMATES, REPORTS, OR OTHER DOCUMENTS OR INSTRUMENTS NOT SEALED BY THE UNDERSIGNED PROFESSIONAL RELATING TO OR INTENDED TO BE USED FOR ANY PART OR PARTS OF THE PROJECT TO WHICH THIS PAGE REFERS.

STATE OF MISSOURI
SHIRLEY J. NORRIS
NUMBER PE-28779
PROFESSIONAL ENGINEER

THIS SHEET HAS BEEN SIGNED, SEALED AND DATED ELECTRONICALLY.

DATE PREPARED	9/29/2016
ROUTE	I-55
STATE	MO
DISTRICT	SL
SHEET NO.	2
COUNTY	JEFFERSON
JOB NO.	J6I3110
CONTRACT ID.	
PROJECT NO.	
BRIDGE NO.	

DATE	DESCRIPTION

IF A SEAL IS PRESENT ON THIS SHEET IT HAS BEEN ELECTRONICALLY SEALED AND DATED.

MISSOURI HIGHWAYS AND TRANSPORTATION COMMISSION

105 WEST CAPITOL
JEFFERSON CITY, MO 65102
1-888-ASK-MODOT (1-888-275-6636)

TYPICAL SECTION SHEET
MILL/FILL AT RAMPS
SHEET 9 OF 9

MOBILIZATION - TOTAL = 1 LUMP SUM

WATER POLLUTION CONTROL MANAGER - 22 WEEKS

CONTRACTOR FURNISHED SURVEY & STAKING - TOTAL = 1 LUMP SUM

MODOT ITS IN-GROUND FACILITY RELOCATION = 5000 LF
LOCATIONS AS DIRECTED BY THE ENGINEER

NOTE:

ANY TRAFFIC CONTROL ITEMS USED DURING THE EXECUTION OF THE WORK ON THIS PROJECT SHALL BE PAID FOR UNDER JOB NO. J6I3131

RUMBLE STRIPS

PVMT MARKING SHEET NUMBER X OF 33	STATION	STATION	LOCATION	RUMBLE STRIPS (STA)	REMARKS
1-33	601+76.0	1457+07.8	SB INSIDE SHLDR	835.5	EXCLUDES ALL BRIDGES
1-2	611+89.5	636+37.8	SB OUTSIDE SHLDR	22.8	EXCLUDES 1 BRIDGE
2-6	643+64.7	725+72.2	SB OUTSIDE SHLDR	76.7	EXCLUDES 2 BRIDGES
6-7	732+35.3	753+69.2	SB OUTSIDE SHLDR	20.0	EXCLUDES 1 BRIDGE
7-11	760+40.3	879+07.0	SB OUTSIDE SHLDR	115.7	EXCLUDES 3 BRIDGES
11-12	880+68.6	906+78.4	SB OUTSIDE SHLDR	26.1	
12-13	913+86.6	935+08.1	SB OUTSIDE SHLDR	21.3	
14	940+87.1	951+95.7	SB OUTSIDE SHLDR	11.1	
14-15	958+34.1	971+79.1	SB OUTSIDE SHLDR	13.4	
15-20	977+68.9	1126+60.0	SB OUTSIDE SHLDR	144.8	EXCLUDES 2 BRIDGES
21-22	1134+89.3	1159+85.0	SB OUTSIDE SHLDR	25.2	EXCLUDE 1 BRIDGE
22-32	1164+46.7	1430+73.0	SB OUTSIDE SHLDR	269.5	
32-33	1436+30.3	1457+07.8	SB OUTSIDE SHLDR	20.8	
1-33	608+97.9	1457+60.0	NB INSIDE SHLDR	831.5	EXCLUDES ALL BRIDGES
1-2	610+65.5	635+98.5	NB OUTSIDE SHLDR	24.0	EXCLUDES 1 BRIDGE
2-6	642+97.9	725+52.5	NB OUTSIDE SHLDR	77.1	EXCLUDES 2 BRIDGES
6-7	732+19.9	753+28.2	NB OUTSIDE SHLDR	19.8	EXCLUDES 1 BRIDGE
7-11	760+48.6	872+58.6	NB OUTSIDE SHLDR	109.0	EXCLUDES 3 BRIDGES
11-12	879+26.2	906+68.0	NB OUTSIDE SHLDR	27.4	
12-13	909+44.6	931+87.1	NB OUTSIDE SHLDR	22.4	
14	939+11.8	951+56.4	NB OUTSIDE SHLDR	12.2	
14-15	958+47.2	970+71.7	NB OUTSIDE SHLDR	12.4	
15-21	976+26.4	1130+06.3	NB OUTSIDE SHLDR	149.7	EXCLUDE 2 BRIDGES
21-22	1135+67.4	1154+12.0	NB OUTSIDE SHLDR	17.0	EXCLUDE 1 BRIDGE
22-32	1159+57.5	1428+14.6	NB OUTSIDE SHLDR	272.0	
32-33	1437+60.6	1457+60.0	NB OUTSIDE SHLDR	20.0	
			TOTAL	3197.4	
			PAY TOTAL	3197.4	

HIGH FRICTION SURFACE TREATMENT

PLAN SHEET NUMBER	STATION	STATION	LOCATION	HIGH FRICTION SURFACE TREATMENT (SY)	REMARKS
16	937+26	938+30	SB DECEL.TO RTE 67 RP 2	143.6	SEE PLAN SHEET 16 FOR EXACT LOCATION
17	938+30	8+00 RP 2	SB DECEL.TO RTE 67 RP 2	1937.6	SEE PLAN SHEET 16 FOR EXACT LOCATION
			TOTAL	2081.2	
			PAY TOTAL	2081	

DISCLAIMER

THE PROFESSIONAL WHOSE SIGNATURE AND PERSONAL SEAL APPEAR HEREON ASSUMES RESPONSIBILITY ONLY FOR WHAT APPEARS ON THIS PAGE, AND DISCLAIMS (PURSUANT TO SECTION 327.411 RSMO) SPECIFICATION, ESTIMATES, REPORTS, OR OTHER DOCUMENTS OR INSTRUMENTS NOT SEALED BY THE UNDERSIGNED PROFESSIONAL RELATING TO OR INTENDED TO BE USED FOR ANY PART OR PARTS OF THE PROJECT TO WHICH THIS PAGE REFERS.

EROSION CONTROL

EROSION CONTROL SHEET NUMBER	STATION	STATION	✱✱ LOCATION	SILT FENCE (LF)	ROCK DITCH CHECK (LF)	SEDIMENT REMOVAL (CY)	SHAPING SLOPES CLASS III (LF)
1	593+88.02	607+84.71	SB RT	1340		134	1350.0
1	600+62.08	606+27.92	SB LT	680		68	690.0
1	609+89.64	611+72.99	SB RT	200		20	210.0
2	617+94.11	625+07.57	NB LT	750		75	760.0
2	618+58.78	625+37.40	SB RT	675		68	685.0
2	626+33.08	632+65.13	NB LT	650		65	670.0
2	626+64.32	629+29.33	NB RT	280		28	295.0
2	631+53.99	638+40.84	RAMP 3	715		72	730.0
2	628+66.53	638+79.38	RAMP 4	1040		104	1060.0
2	639+75.39	643+38.75	NB LT	380		38	395.0
2-3	642+98.18	652+51.04	SB RT	970		97	990.0
3	648+67.36	656+86.87	NB LT	835		84	845.0
3	661+85.44	666+65.82	SB RT	470		47	485.0
4	674+75.91	687+96.02	SB RT	1340		134	1365.0
4	677+59.53	687+97.97	NB LT	1055		106	1075.0
4-5	689+10.40	701+26.74	SB RT	1235		124	1250.0
4-5	689+17.22	700+74.48	NB LT	1180		118	1180.0
4-5	689+15.29	700+85.73	MEDIAN-LT	1190		119	1195.0
4-5	695+93.21	701+14.46	MEDIAN-RT	535		54	540.0
5	704+38.94	713+01.28	NB LT	885		89	905.0
5-6	723+12.92	731+58.31	NB LT	760		76	775.0
6	735+80.11	742+38.83	SB RT	975		98	1000.0
6	736+86.23	742+39.41	NB LT	575		58	585.0
6	743+53.20	744+00.26	SB RT	165		17	185.0
6	743+48.51	749+28.97	NB LT	595		60	615.0
6-7	749+52.56	757+67.42	RAMP 3 & NB LT	835		84	855.0
7-8	774+92.76	783+75.76	SB RT	900		90	920.0
8	779+76.98	792+43.33	NB LT	1280		128	1300.0
8-9	797+86.41	811+29.89	NB LT	1360		136	1380.0
8	799+12.77	804+14.26	SB RT	515		52	535.0
8-9	804+39.98	808+66.40	SB RT	440		44	465.0
9	813+74.71	817+49.03	SB RT	390		39	415.0
9	814+16.08	821+30.04	NB LT	730		73	745.0
9-10	832+67.95	839+99.99	SB RT	1005		101	1020.0
9-10	832+89.32	840+10.67	SB LT	1010		101	1030.0
10	838+64.33	840+23.05	NB LT	450		45	460.0
10	841+40.92	843+76.07	SB RT	250		25	260.0
10	841+62.04	849+71.17	NB LT	830		83	840.0
10	845+22.32	849+74.11	SB RT	470		47	480.0
10-11	852+46.69	857+32.64	SB RT	510		51	525.0
10-11	852+41.77	857+41.79	NB LT	510		51	525.0
11	858+01.53	862+59.95	SB RT	480		48	500.0
11	863+73.62	870+58.20	SB RT	700		70	690.0
11	863+76.96	868+89.81	NB LT	520		52	530.0
11	870+89.31	872+75.03	NB LT	190		19	210.0
11-12	878+02.64	885+84.15	RAMP 1	810		81	830.0
11-12	878+52.87	884+78.47	RAMP 2	645		65	660.0
12	896+36.75	901+91.01	SB RT	570		57	585.0
12	897+18.71	903+24.08	NB LT	620		62	635.0
12-13	909+64.64	913+35.86	NB LT	340		34	380.0
13	915+84.26	926+04.34	SB RT	1035		104	1045.0
13	919+16.05	930+33.75	NB LT	1130		113	1140.0
14	939+23.61	941+76.75	SB LT	270		27	285.0
14	939+20.80	950+90.60	RAMP 2	1570		157	1585.0
14	949+62.61	954+02.93	NB LT	465		47	500.0
14	950+06.10	954+17.18	SB RT	430		43	440.0
14	955+79.71	959+75.51	NB LT	410		41	425.0
14	955+93.95	959+51.34	SB RT	375		38	385.0
14-15	959+24.73	966+89.69	RAMP 7	975		98	986.0
15	965+10.31	972+10.31	RAMP 8	760		76	780.0
15	969+80.29	972+37.78	NB RT	270		27	275.0
15	968+10.31	978+67.11	NB LT	980		98	990.0
15	975+88.00	979+34.77	SB RT	360		36	360.0
16	1004+40.09	1009+27.52	SB LT	500		50	520.0
16	1005+63.08	1009+62.89	SB RT	410		41	420.0
16	1010+78.55	1015+66.88	NB RT	500		50	495.0
16	1010+41.90	1014+54.81	NB LT	430		43	450.0
17	1022+24.18	1027+11.24	SB LT	500		50	510.0
17	1023+11.31	1027+11.24	SB RT	415		42	430.0
17	1029+40.16	1035+02.84	NB RT	580		58	580.0
17	1029+40.16	1034+78.50	NB LT	550		55	560.0
19-20	1095+76.36	1100+10.11	NB RT	450		45	460.0
20-21	1126+72.82	1141+85.05	RAMP 2	1520		152	1530.0
21	1130+08.05	1144+68.89	RAMP 1	1510		151	1520.0
21	1138+48.45	1143+25.80	SB LT	490		49	480.0
21	1138+68.85	1143+05.40	SB RT	450		45	490.0
21	1143+25.05	1147+58.78	RAMP 4-RT	450		45	485.0
21	1144+87.71	1150+00.71	RAMP 4-LT	530		53	530.0
21	1145+15.72	1148+96.97	NB LT	580		58	590.0
21	1144+92.37	1150+57.22	NB RT	400		40	410.0
24	1222+63.74	1223+50.81	NB LT	450		45	460.0
33	1453+63.78	1458+66.65	SB LT	520		52	520.0
33	1453+96.98	1458+46.23	SB RT	460		46	470.0
ALL	VARIOUS				300	30	
			TOTAL	56560.0	300.0	5686.0	57716.0
			PAY TOTAL	✱	300	✱	57716

✱ SHOWN FOR IMFORMATIONAL USE ONLY. ITEM PAID FOR IN SHAPING SLOPES CLASS 3

✱✱ IN DIRECTION OF INCREASING STATIONING

NOTE: ROCK DITCH CHECKS TO BE LOCATED AT VARIOUS LOCATIONS AS DIRECTED BY THE ENGINEER (FIGURE 15 LF EACH AT 20 LOCATIONS)

STATE OF MISSOURI
SHIRLEY J. NORRIS
NUMBER PE-28779
PROFESSIONAL ENGINEER

THIS SHEET HAS BEEN SIGNED, SEALED AND DATED ELECTRONICALLY.

DATE PREPARED 9/29/2016

ROUTE I-55 | STATE MO

DISTRICT SL | SHEET NO. 3

COUNTY JEFFERSON

JOB NO. J6I3110

CONTRACT ID.

PROJECT NO.

BRIDGE NO.

DATE	DESCRIPTION

IF A SEAL IS PRESENT ON THIS SHEET IT HAS BEEN ELECTRONICALLY SEALED AND DATED.

MISSOURI HIGHWAYS AND TRANSPORTATION COMMISSION

105 WEST CAPITOL
JEFFERSON CITY, MO 65102
1-888-ASK-MODOT (1-888-275-6636)

SUMMARY OF QUANTITIES

SHEET 1 OF 7

REMOVAL OF IMPROVEMENTS

PLAN SHEET	RDWY	STATION	STATION	LOCATION	ITEM	QUANTITY (LF)	QUANTITY (EACH)	REMARKS
4	I-55	594+26.90	607+64.40	SB-RT	GUARD RAIL	1338	1 CET & 1 BATS	
4	I-55	600+98.10	606+98.10	SB-LT	GUARD RAIL	600	1 CET & 1 BATS	
4	I-55	610+42.00	611+55.00	SB-RT	GUARD RAIL	113	1 BATS	
4	I-55	608+38.70	612+10.90	NB-RT	GUARD RAIL	372	1 CET & 1 BATS	
5	I-55	618+25.00	625+00.00	NB-RT	GUARD RAIL	675	1 BATS	
5	I-55	619+16.00	625+20.00	SB-RT	GUARD RAIL	604	1 CET & 1 BATS	
5	I-55	626+47.00	632+07.00	NB-RT	GUARD RAIL	560	1 CET & 1 BATS	
5	I-55	626+73.00	629+06.00	SB-RT	GUARD RAIL	233	1 BATS	
5	RTE. Z			RAMP 4	GUARD RAIL	952	1 CET & 1 BATS	
5	RTE. Z			RAMP 3	GUARD RAIL	666	1 BATS	
5	I-55	634+20		NB-LT	SIGN		1 SIGN	USE EX. POSTS
5	I-55	636+00		NB-LT	SIGN		1 SIGN	USE EX. POSTS
5	I-55	640+20		NB-LT	SIGNS		2 SIGNS	USE EX. POSTS
5	I-55	639+86.00	642+75.00	NB-RT	GUARD RAIL	289	1 CET & 1 BATS	
5-6	I-55	643+59.00	652+34.00	SB-RT	GUARD RAIL	875	1 CET	
6	I-55	655+97		SB-RT	SIGN & POSTS		1 SIGN & 2 POSTS	
6	I-55	668+96		SB-RT	SIGN & POSTS		1 SIGN & 2 POSTS	
6	I-55	648+85.00	656+35.00	NB-RT	GUARD RAIL	750	1 CET	
6	I-55	662+37.00	666+50.00	SB-RT	GUARD RAIL	413	1 CET	
7	I-55	675+48.00	687+81.00	SB-RT	GUARD RAIL	1233	1 CET & 1 BATS	
7	I-55	677+69.00	687+81.00	NB-RT	GUARD RAIL	1012	1 BATS	
7-8	I-55	689+27.00	700+55.00	NB-RT	GUARD RAIL	1130	2 BATS	
7-8	I-55	689+27.00	700+71.00	NB-LT	GUARD RAIL	1144	2 BATS	
7	I-55	689+78		NB-LT	SIGNS & POSTS		2 SIGNS & 2 POSTS	
7-8	I-55	689+23.00	701+12.00	SB-RT	GUARD RAIL	1189	2 BATS	
8	I-55	698+91		NB-LT	SIGN & POSTS		1 SIGN & 2 POSTS	
8	I-55	699+57		NB-LT	SIGN & POSTS		1 SIGN & 2 POSTS	
7-8	I-55	696+56.00	700+96.00	SB-LT	GUARD RAIL	440	1 CET & 1 BATS	
8	I-55	706+44		SB-RT	SIGN		1 SIGN	USE EX. POSTS
8	I-55	710+24		NB-LT	SIGN & POSTS		1 SIGN & 2 POSTS	
8	I-55	704+52.00	712+32.00	NB-RT	GUARD RAIL	785	1 CET & 1 BATS	
8-9	I-55	723+36.00	730+05.00	NB-RT	GUARD RAIL	669	1 CET	
9	I-55	731+51		SB-RT	SIGN		1 SIGN	USE EX. POSTS
9	I-55	734+74		SB-RT	SIGN & POSTS		1 SIGN & 2 POSTS	
9	I-55	736+45.00	742+28.00	SB-RT	GUARD RAIL	583	1 CET & 1 BATS	
9	I-55	736+81.00	742+29.00	NB-RT	GUARD RAIL	547	1 BATS	
9	I-55	743+64.00	744+81.00	SB-RT	GUARD RAIL	117	1 BATS	
9	I-55	743+62.00	748+59.00	NB-RT	GUARD RAIL	498	1 CET & 1 BATS	
9-10	MCNUTT ST.			RAMP 3	GUARD RAIL	744	1 CET	
9	I-55	751+18		NB-LT	SIGN		1 SIGN	USE EX. POSTS
10	I-55	752+95		NB-LT	SIGN		1 SIGN	USE EX. POSTS
10	i-55	776+05		SB-RT	SIGN		1 SIGN	USE EX. POSTS
10-11	I-55	775+46.00	783+59.00	SB-RT	GUARD RAIL	815	1 CET	
11	I-55	779+93.00	791+80.00	NB-RT	GUARD RAIL	1182	1 CET	
11	I-55	782+13		NB-LT	SIGN		1 SIGN	USE EX. POSTS
11	I-55	782+25		SB-RT	SIGN		1 SIGN	USE EX. POSTS
11-12	I-55	798+03.00	810+73.00	NB-RT	GUARD RAIL	1270	1 CET	
11	I-55	799+66.00	804+03.00	SB-RT	GUARD RAIL	441	1 CET	
11-12	I-55	804+93.00	808+55.00	SB-RT	GUARD RAIL	365	1 CET	
12	I-55	814+45.00	816+40.00	SB-RT	GUARD RAIL	295	1 CET & 1 BATS	
12	I-55	815+66.00	820+58.00	NB-RT	GUARD RAIL	493	1 CET & 1 BATS	
13	I-55	833+31.00	842+58.00	SB-RT	GUARD RAIL	920	1 CET & 1 BATS	
13	I-55	833+69.00	842+69.00	SB-LT	GUARD RAIL	899	1 CET & 1 BATS	
13	I-55	838+98.00	842+82.00	NB-RT	GUARD RAIL	386	1 BATS	
13	I-55	841+52.00	843+59.00	SB-RT	GUARD RAIL	207	1 BATS	
13	I-55	841+73.00	849+63.00	NB-RT	GUARD RAIL	789	2 BATS	
13	I-55	845+84.12	849+64.14	SB-RT	GUARD RAIL	380	1 CET & 1 BATS	
13	I-55	846+33		NB-LT	SIGN & POSTS		1 SIGN & 2 POSTS	
13	I-55	852+56.00	856+88.00	NB-RT	GUARD RAIL	431	1 CET & 1 BATS	
13	I-55	852+56.00	857+10.00	SB-RT	GUARD RAIL	455	1 BATS	
13	I-55	855+83		NB-LT	SIGN		1 SIGN	USE EX. POSTS
14	I-55	858+69.00	862+49.00	SB-RT	GUARD RAIL	383	1 CET & 1 BATS	
14	I-55	863+84.00	870+58.00	SB-RT	GUARD RAIL	681	2 BATS	
14	I-55	863+87.00	686+28.00	NB-RT	GUARD RAIL	435	1 CET & 1 BATS	
14	I-55	870+90.00	871+05.00	NB-RT	GUARD RAIL	114	1 CET & 1 BATS	
14	I-55	875+85		SB-RT	SIGNS & POSTS		2 SIGNS & 2 POSTS	
14-15	I-55	878+20.00	885+48.00	NB-RT	GUARD RAIL	731	1 CET	
14-15	I-55	879+04.00	884+60.00	SB-RT	GUARD RAIL	564	1 CET	
14	I-55	880+31		SB-RT	SIGN		1 SIGN	USE EX. POSTS
14	I-55	882+54		SB-RT	SIGN & POSTS		1 SIGN & 2 POSTS	
15	I-55	896+87.00	901+80.00	SB-RT	GUARD RAIL	533	1 CET	

(CONTINUED) REMOVAL OF IMPROVEMENTS

PLAN SHEET	ROADWAY	STATION	STATION	LOCATION	ITEM	QUANTITY (LF)	QUANTITY (EACH)	REMARKS
15	I-55	897+39.00	902+71.00	NB-RT	GUARD RAIL	533	1 CET	
15	I-55	904+31		NB-LT	SIGN		1 SIGN	USE EX. POSTS
15	I-55	906+50		NB-LT	SIGN		1 SIGN	USE EX. POSTS
15-16	I-55	909+76.00	912+94.00	NB-RT	GUARD RAIL	318	1 CET	
16	I-55	911+15		NB-LT	SIGNS & POSTS		2 SIGNS & 2 POSTS	
16	I-55	916+00		NB-LT	SIGN		1 SIGN	USE EX. POSTS
16	I-55	916+37.00	925+90.00	SB-RT	GUARD RAIL	953	1 CET	
16	I-55	917+35		SB-RT	SIGN & POSTS		1 SIGN & 2 POSTS	
16	I-55	919+26.00	929+82.00	NB-RT	GUARD RAIL	1056	1 CET	
16	I-55	929+16		NB-LT	SIGNS & POSTS		3 SIGNS & 2 POSTS	
17	I-55	939+74.00	941+60.00	SB-LT	GUARD RAIL	190	1 CET	
17	I-55	939+76.00	941+98.00	SB-RT	GUARD RAIL	230	1 CET	
17	RTE. 67			RAMP 2	GUARD RAIL	588		
17	I-55	941+35		SB-RT	SIGNS		6 SIGNS	USE EX. TRUSS
17	I-55	942+72		SB-RT	SIGN & POSTS		1 SIGN & 2 POSTS	
17	I-55	950+04		NB-LT	SIGN		1 SIGN	USE EX. POSTS
17	I-55	950+43.00	954+07.00	SB-RT	GUARD RAIL	368	1 CET & 1 BATS	
17	I-55	949+65.00	953+95.00	NB-RT	GUARD RAIL	442	1 BATS	
17	I-55	951+30		NB-LT	SIGNS		2 SIGNS	USE EX. CANTILEVER
17	I-55	951+50		NB-LT	SIGN		1 SIGN	USE EX. POSTS
17	I-55	955+93.00	959+26.00	NB-RT	GUARD RAIL	338	1 CET & 1 BATS	
17	I-55	956+05.00	959+40.00	SB-RT	GUARD RAIL	338	1 BATS	
17-18	RTE. 67			RAMP 7	GUARD RAIL	891	1 CET	
18	RTE. 67			RAMP 8	GUARD RAIL	674	1 CET	
18	I-55	958+59		SB-RT	SIGNS		3 SIGNS	USE EX. CANTILEVER
18	I-55	968+92		NB-LT	SIGN & POSTS		1 SIGN & 2 POSTS	
18	I-55	969+13.00	978+15.00	NB-RT	GUARD RAIL	906	1 CET	
18	I-55	969+98.00	971+85.00	NB-LT	GUARD RAIL	187	1 CET	
18	I-55	970+52		NB-LT	SIGNS		6 SIGNS	USE EX. TRUSS
18	I-55	976+43.00	979+25.00	SB-RT	GUARD RAIL	282	1 CET	
18	I-55	982+48		NB-LT	SIGN & POSTS		1 SIGN & 2 POSTS	
19	I-55	1001+55		SB-RT	SIGN & POSTS		I SIGN & 2 POSTS	
19	I-55	1005+00.00	1009+17.00	SB-LT	GUARD RAIL	417	1 CET & 1 BATS	
19	I-55	1006+27.00	1009+51.00	SB-RT	GUARD RAIL	326	1 CET & 1 BATS	
19	I-55	1010+59.00	1013+85.00	NB-RT	GUARD RAIL	333	1 CET & 1 BATS	
19	I-55	1010+89.00	1015+07.00	NB-LT	GUARD RAIL	418	1 CET & 1 BATS	
20	I-55	1022+77.00	1027+00.00	SB-LT	GUARD RAIL	423	1 CET & 1 BATS	
20	I-55	1022+90		NB-LT	SIGNS & POSTS		2 SIGNS & 2 POSTS	
20	I-55	1023+66.00	1027+00.00	SB-RT	GUARD RAIL	334	1 CET & 1 BATS	
20	I-55	1029+51.00	1034+21.00	NB-RT	GUARD RAIL	470	1 CET & 1 BATS	
20	I-55	1029+51.00	1034+44.00	NB-LT	GUARD RAIL	493	1 CET & 1 BATS	
20	I-55	1038+08		NB-LT	SIGN		1 SIGN	USE EX. POSTS
22	I-55	1095+94.00	1099+57.00	NB-RT	GUARD RAIL	366	1 CET	
22	I-55	1097+92		SB-RT	SIGNS & POSTS		2 SIGNS & 2 POSTS	
23	I-55	1102+87		NB-LT	SIGN & POSTS		1 SIGN & 2 POSTS	
23	I-55	1117+90		NB-LT	SIGN & POSTS		1 SIGN & 2 POSTS	
23	I-55	1124+94		SB-RT	SIGNS & POSTS		3 SIGNS & 2 POSTS	
24	I-55	1134+75		SB-RT	SIGN		1 SIGN	USE EX. POSTS
24	I-55	1135+32		SB-RT	SIGN & POSTS		1 SIGN & 2 POSTS	
24	RTE. 61			RAMP 1	GUARD RAIL	1375	1 CET	
24	RTE. 61			RAMP 2	GUARD RAIL	1400	1 CET	
24	RTE. 61			RAMP 4-RT	GUARD RAIL	366	1 CET	
24	RTE. 61			RAMP 4-LT	GUARD RAIL	451	1 CET	
24	I-55	1139+00.00	1143+16.00	SB-LT	GUARD RAIL	419	1 CET & 1 BATS	
24	I-55	1139+22.00	1142+96.00	SB-RT	GUARD RAIL	373	1 CET & 1 BATS	
24	I-55	1145+04.00	1150+00.00	NB-LT	GUARD RAIL	496	1 CET & 1 BATS	
24	I-55	1145+27.00	1148+35.00	NB-RT	GUARD RAIL	308	1 CET & 1 BATS	
24	I-55	1153+00		NB-LT	SIGN & POSTS		1 SIGN & 2 POSTS	
25	I-55	1155+16		SB-RT	SIGN		1 SIGN	USE EX. POST
25	I-55	1161+92		NB-LT	SIGNS & POSTS		2 SIGNS & 2 POSTS	
25	I-55	1175+93		NB-LT	SIGN & POST		1 SIGN & 1 POST	
26	I-55	1187+00		SB-RT	SIGNS & POSTS		2 SIGNS & 2 POSTS	
26	I-55	1193+72		SB-RT	SIGN & POSTS		1 SIGN & 2 POSTS	
26	I-55	1194+90		NB-LT	SIGNS & POSTS		2 SIGNS & 2 POSTS	
27	I-55	1222+73.70	1222+97.00	NB-RT	GUARD RAIL	367	1 CET	
34	I-55	1413+14		NB-LT	SIGN & POSTS		1 SIGN & 2 POSTS	
36	I-55	1454+37.00	1458+60.00	SB-LT	GUARD RAIL	423	1 CET & 1 BATS	
36	I-55	1454+63.00	1458+60.00	SB-RT	GUARD RAIL	397	1 CET & 1 BATS	
36	I-55	1458+26		SB-RT	SIGN & POSTS		1 SIGN & 2 POSTS	
36	I-55	1461+55		NB-LT	SIGN & POSTS		1 SIGN & 2 POSTS	
PAY TOTAL =						1 LUMP SUM		

THE PROFESSIONAL WHOSE SIGNATURE AND PERSONAL SEAL APPEAR HEREON ASSUMES RESPONSIBILITY ONLY FOR WHAT APPEARS ON THIS PAGE, AND DISCLAIMS (PURSUANT TO SECTION 327.411 RSMO) SPECIFICATION, ESTIMATES, REPORTS, OR OTHER DOCUMENTS OR INSTRUMENTS NOT SEALED BY THE UNDERSIGNED PROFESSIONAL RELATING TO OR INTENDED TO BE USED FOR ANY PART OR PARTS OF THE PROJECT TO WHICH THIS PAGE REFERS.

STATE OF MISSOURI
SHIRLEY J. NORRIS
NUMBER PE-28779
PROFESSIONAL ENGINEER

THIS SHEET HAS BEEN SIGNED, SEALED AND DATED ELECTRONICALLY.

DATE PREPARED
9/29/2016

ROUTE	STATE
I-55	MO
DISTRICT	SHEET NO.
SL	3

COUNTY
JEFFERSON

JOB NO.
J6I3110

CONTRACT ID.

PROJECT NO.

BRIDGE NO.

DATE	DESCRIPTION

IF A SEAL IS PRESENT ON THIS SHEET IT HAS BEEN ELECTRONICALLY SEALED AND DATED.

MISSOURI HIGHWAYS AND TRANSPORTATION COMMISSION
105 WEST CAPITOL
JEFFERSON CITY, MO 65102
1-888-ASK-MODOT (1-888-275-6636)

SUMMARY OF QUANTITIES

SHEET 2 OF 7

GUARDRAIL

PLAN SHEET	RDWY	STATION	STATION	LOCATION	MGS GUARDRAIL (LF)	6' POSTS 1'-6.75"SPACE MGS GUARDRAIL (LF)	6' POSTS 3'-1.5"SPACE MGS GUARDRAIL (LF)	MGS BRIDGE APPROACH TRANSITION SECTION (MINOR) (EA)	MGS END ANCHOR (EA)	TYPE A CRASHWORTHY END TERMINAL (MASH) (EA)	MGS HEIGHT AND BLOCK TRANSITION (EA)
4	I-55	594+76.90	607+26.90	SB-RT	1250.0			1		1	
4	I-55	601+48.10	606+60.60	SB-LT	512.5			1		1	
4	I-55	608+76.20	611+76.20	RAMP 1	300.0			1		1	
4	I-55	610+79.50	611+54.50	SB-RT	75.0			1	1		
5	I-55	617+89.80	624+64.80	NB-RT	675.0			1	1		
5	I-55	619+73.30	624+85.80	SB-RT	512.5			1		1	
5	I-55	626+81.50	631+69.00	NB-RT	487.5			1		1	
5	I-55	627+11.10	629+11.10	SB-RT	200.0			1	1		
5	I-55	629+68.00	638+30.90	RAMP 4	875.0			1		1	
5	I-55	631+71.70	637+92.30	RAMP 3	625.0			1	1		
5	I-55	640+23.30	642+35.80	NB-RT	212.5			1		1	
5-6	I-55	643+33.90	652+33.90	SB-RT	900.0				1	1	
6	I-55	648+84.90	655+84.90	NB-RT	700.0				1	1	
6	I-55	662+86.50	666+49.00	SB-RT	362.5				1	1	
7	I-55	675+80.80	687+43.30	SB-RT	1162.5			1		1	
7	I-55	677+68.80	687+43.80	NB-RT	975.0			1	1		
7-8	I-55	689+64.70	700+18.00	NB-RT	1062.5			2			
7-8	I-55	689+64.70	700+33.60	NB-LT	1075.5			2			
7-8	I-55	689+60.60	700+74.50	SB-RT	1112.5			2			
7-8	I-55	696+96.30	700+58.80	SB-LT	362.5			1		1	
8	I-55	704+89.40	712+01.90	NB-RT	712.5			1		1	
8-9	I-55	723+30.50	729+55.30	NB-RT	625.0				1	1	
9	I-55	736+78.20	741+90.70	SB-RT	512.5			1		1	
9	I-55	736+91.10	741+91.10	NB-RT	500.0			1	1		
9	I-55	744+01.30	744+88.80	SB-RT	87.5			1	1		
9	I-55	743+99.60	748+24.60	NB-RT	425.0			1		1	
9-10	I-55	749+69.90	756+65.00	RAMP 3	700.0				1	1	
10-11	I-55	775+96.00	783+58.50	SB-RT	762.5				1	1	
11	I-55	779+93.20	791+43.20	NB-RT	1150.0				1	1	
11-12	I-55	798+03.40	810+28.40	NB-RT	1225.0				1	1	
11	I-55	800+15.60	804+03.10	SB-RT	387.5				1	1	
11-12	I-55	805+42.70	808+55.20	SB-RT	312.5				1	1	
12	I-55	814+77.80	817+02.80	SB-RT	225.0			1		1	
12	I-55	814+27.60	820+27.70	NB-RT	500.0			2	1	1	
13	I-55	833+71.90	839+52.90	SB-RT	850.0			1		1	
13	I-55	834+07.60	839+63.60	SB-LT	825.0			1		1	
13	I-55	838+82.80	839+76.30	NB-RT	362.5			1	1		
13	I-55	841+88.10	843+63.10	SB-RT	175.0			1	1		
13	I-55	842+09.00	849+24.10	NB-RT	725.0			2			
13	I-55	846+27.90	849+27.90	SB-RT	300.0			1		1	
13	I-55	852+89.80	856+39.80	NB-RT	350.0			1		1	
13	I-55	852+93.60	857+18.60	SB-RT	425.0			1	1		
14	I-55	859+00.70	862+13.20	SB-RT	312.5			1		1	
14	I-55	864+22.40	870+21.10	SB-RT	600.0			2			
14	I-55	864+26.40	867+88.90	NB-RT	362.5			1		1	
14	I-55	871+27.50	871+77.50	NB-RT	50.0			1		1	
14-15	I-55	878+19.60	884+98.80	NB-RT	687.5				1	1	
14-15	I-55	879+54.00	884+60.20	SB-RT	512.5				1	1	
15	I-55	897+36.70	901+74.20	SB-RT	437.5				1	1	
15	I-55	897+33.60	902+21.10	NB-RT	487.5				1	1	
15-16	I-55	909+81.40	912+43.90	NB-RT	262.5				1	1	
16	I-55	916+87.40	925+87.40	SB-RT	900.0				1	1	
16	I-55	919+32.30	929+32.30	NB-RT	1000.0				1	1	
17	I-55	939+84.70	940+97.20	SB-LT	112.5				1 - (AT 941+59.7)	1	
17	I-55			RAMP 2	1387.5					1	1
17	I-55	SIGN 15 BASE (LT)		SB-LT		12.5	50.0				
17	I-55	SIGN 15 BASE (RT)		RAMP 2		12.5	50.0				
17	I-55	950+83.10	953+70.60	SB-RT	287.5			1		1	
17	I-55	949+65.80	953+56.00	NB-RT	400.0			1	1		
17	I-55	956+28.50	958+91.00	NB-RT	262.5			1		1	
17	I-55	956+41.10	959+41.10	SB-RT	300.0			1	1		
17-18	I-55			RAMP 7	837.5				1	1	
18	I-55	SIGN 42 BASE (RT)		NB-LT		12.5	50.0				
18	I-55	SIGN 42 BASE (LT)		RAMP 7		12.5	50.0				
18	I-55			RAMP 8	637.5				1	1	
18	I-55	969+18.30	977+64.80	NB-RT	800.0				1	1	
18	I-55	969+93.50	970+18.50	NB-LT	25.0				1 - (AT 969+93.5)		
18	I-55	970+81.00	972+03.50	NB-LT	122.5					1	
18	I-55	976+92.60	979+17.60	SB-RT	225.0				1	1	

DISCLAIMER

THE PROFESSIONAL WHOSE SIGNATURE AND PERSONAL SEAL APPEAR HEREON ASSUMES RESPONSIBILITY ONLY FOR WHAT APPEARS ON THIS PAGE, AND DISCLAIMS (PURSUANT TO SECTION 327.411 RSMO) SPECIFICATION, ESTIMATES, REPORTS, OR OTHER DOCUMENTS OR INSTRUMENTS NOT SEALED BY THE UNDERSIGNED PROFESSIONAL RELATING TO OR INTENDED TO BE USED FOR ANY PART OR PARTS OF THE PROJECT TO WHICH THIS PAGE REFERS.

STATE OF MISSOURI
SHIRLEY J. NORRIS
NUMBER PE-28779
PROFESSIONAL ENGINEER
THIS SHEET HAS BEEN SIGNED, SEALED AND DATED ELECTRONICALLY.

DATE PREPARED 10/20/2016

ROUTE	STATE
I-55	MO
DISTRICT	SHEET NO.
SL	3

COUNTY JEFFERSON

JOB NO. J6I3110

CONTRACT ID.

PROJECT NO.

BRIDGE NO.

DATE	DESCRIPTION

IF A SEAL IS PRESENT ON THIS SHEET IT HAS BEEN ELECTRONICALLY SEALED AND DATED.

MISSOURI HIGHWAYS AND TRANSPORTATION COMMISSION

105 WEST CAPITOL
JEFFERSON CITY, MO 65102
1-888-ASK-MODOT (1-888-275-6636)

SUMMARY OF QUANTITIES

SHEET 3 OF 7

GUARDRAIL (CONTINUED)

PLAN SHEET	RDWY	STATION	STATION	LOCATION	MGS GUARDRAIL (LF)	6' POSTS 1'-6.75"SPACE MGS GUARDRAIL (LF)	6' POSTS 3'-1.5"SPACE MGS GUARDRAIL (LF)	MGS BRIDGE APPROACH TRANSITION SECTION (MINOR) (EA)	MGS END ANCHOR (EA)	TYPE A CRASHWORTHY END TERMINAL (MASH) (EA)	MGS HEIGHT AND BLOCK TRANSITION (EA)
19	I-55	1005+44.40	1008+81.80	SB-LT	337.5			1		1	
19	I-55	1006+67.20	1009+17.20	SB-RT	250.0			1		1	
19	I-55	1010+88.80	1013+51.30	NB-RT	262.5			1		1	
19	I-55	1011+25.60	1014+63.10	NB-LT	337.5			1		1	
20	I-55	1023+26.30	1026+63.80	SB-LT	337.5			1		1	
20	I-55	1024+13.80	1026+63.80	SB-RT	250.0			1		1	
20	I-55	1029+87.40	1033+74.49	NB-RT	387.5			1		1	
20	I-55	1029+87.40	1033+99.90	NB-LT	412.5			1		1	
22	I-55	1095+94.50	1099+07.00	NB-RT	312.5				1	1	
24	RTE. 61			RAMP 1	1375.0				1	1	
24	RTE. 61			RAMP 2	1400.0				1	1	
24	RTE. 61			RAMP 4-RT	312.5				1	1	
24	RTE. 61			RAMP 4-LT	400.0				1	1	
24	I-55	1139+42.00	1142+79.50	SB-LT	337.5			1		1	
24	I-55	1139+71.70	1142+59.20	SB-RT	287.5			1		1	
24	I-55	1145+39.70	1149+52.20	NB-LT	412.5			1		1	
24	I-55	1145+62.90	1148+00.40	NB-RT	237.5			1		1	
27	I-55	1222+79.40	1222+46.10	NB-RT	312.5				1	1	
36	I-55	1454+82.90	1458+20.40	SB-LT	337.5			1		1	
36	I-55	1454+99.80	1457+99.80	SB-RT	300.0			1		1	
				TOTAL	45185.5	50.0	200.0	60	42	67	1
				PAY TOTAL	45186	50	200	60	42	67	1

DISCLAIMER
THE PROFESSIONAL WHOSE SIGNATURE AND PERSONAL SEAL APPEAR HEREON ASSUMES RESPONSIBILITY ONLY FOR WHAT APPEARS ON THIS PAGE, AND DISCLAIMS (PURSUANT TO SECTION 327.411 RSMO) SPECIFICATION, ESTIMATES, REPORTS, OR OTHER DOCUMENTS OR INSTRUMENTS NOT SEALED BY THE UNDERSIGNED PROFESSIONAL RELATING TO OR INTENDED TO BE USED FOR ANY PART OR PARTS OF THE PROJECT TO WHICH THIS PAGE REFERS.

STATE OF MISSOURI
SHIRLEY J. NORRIS
NUMBER PE-28779
PROFESSIONAL ENGINEER
THIS SHEET HAS BEEN SIGNED, SEALED AND DATED ELECTRONICALLY.

DATE PREPARED 10/20/2016
ROUTE I-55 | STATE MO
DISTRICT SL | SHEET NO. 3
COUNTY JEFFERSON
JOB NO. J6I3110
CONTRACT ID.
PROJECT NO.
BRIDGE NO.

DESCRIPTION	DATE

IF A SEAL IS PRESENT ON THIS SHEET IT HAS BEEN ELECTRONICALLY SEALED AND DATED.

MISSOURI HIGHWAYS AND TRANSPORTATION COMMISSION
105 WEST CAPITOL
JEFFERSON CITY, MO 65102
1-888-ASK-MODOT (1-888-275-6636)

SUMMARY OF QUANTITIES

SHEET 4 OF 7

DISCLAIMER
THE PROFESSIONAL WHOSE SIGNATURE AND PERSONAL SEAL APPEAR HEREON ASSUMES RESPONSIBILITY ONLY FOR WHAT APPEARS ON THIS PAGE, AND DISCLAIMS (PURSUANT TO SECTION 327.411 RSMO) SPECIFICATION, ESTIMATES, REPORTS, OR OTHER DOCUMENTS OR INSTRUMENTS NOT SEALED BY THE UNDERSIGNED PROFESSIONAL RELATING TO OR INTENDED TO BE USED FOR ANY PART OR PARTS OF THE PROJECT TO WHICH THIS PAGE REFERS.

PAVEMENT COLD MILLING & RESURFACING

PLAN SHEET NO.	RDWY	STATION	STATION	LOCATION	COLD MILLING 3" OR LESS (S.Y.)	COLD MILLING GREATER THAN 3" (S.Y.)	2" DEPTH SP125BSM W/ PG 76-22 RESURFACING (TONS)	VARIABLE DEPTH SP125BSM W/ PG 76-22 RESURFACING (TONS)	TACK COAT (GAL.)	REMARKS
1	I-55	601+76.00	606+19.60	SB		1330.8			266.2	SB MAINLINE
1	I-55	GORE AREA OF RAMP 1			178.4		19.3		17.8	
1	I-55	606+19.60	607+64.40	SB		660.5		125.0	132.1	RESURFACING FOR 145 FT BEFORE BRIDGE NUMBER A1035
1	I-55	608+38.70	609+55.00	NB		533.0		100.9	106.6	RESURFACING FOR 117 FT AFTER BRIDGE NUMBER A1035
1 to 2	I-55	609+55.00	642+97.90	NB	12817.0		1384.5		1281.7	7921.9 S.Y. NB MAINLINE (INCL. DECEL. & ACCEL.) & 4895.1 S.Y. RAMPS 1 & 3. EXCLUDES BRIDGES A0951 & A0953 OVER ROUTE Z.
2	I-55	609+72.00	611+31.50	SB		727.5		137.7	145.5	RESURFACING FOR 160 FT AFTER BRIDGE NUMBER A1035
3	I-55	623+52.30	625+02.30	NB		625.0		118.3	125.0	RESURFACING FOR 150 FT AFTER BRIDGE NUMBER A0951
3	I-55	626+51.30	628+01.30	NB		625.0		118.3	125.0	RESURFACING FOR 150 FT BEFORE BRIDGE NUMBER A0951
3	I-55	623+63.80	625+19.80	SB		625.0		118.3	125.0	RESURFACING FOR 150 FT BEFORE BRIDGE NUMBER A0951
3	I-55	626+68.80	628+18.80	SB		625.0		118.3	125.0	RESURFACING FOR 150 FT AFTER BRIDGE NUMBER A0951
3	I-55	636+85.90	638+35.90	NB		683.3		129.3	136.7	RESURFACING FOR 150 FT AFTER BRIDGE NUMBER A0953
3	I-55	639+91.90	641+41.90	NB		683.3		129.3	136.7	RESURFACING FOR 150 FT BEFORE BRIDGE NUMBER A0953
3	I-55	637+12.80	638+62.80	SB		683.3		129.3	136.7	RESURFACING FOR 150 FT AFTER BRIDGE NUMBER A0953
3	I-55	640+18.80	641+68.80	SB		683.3		129.3	136.7	RESURFACING FOR 150 FT BEFORE BRIDGE NUMBER A0953
2 to 3	I-55	611+31.50	643+64.30	SB	12142.8		1311.7		1214.3	7394.6 S.Y. SB MAINLINE (INCL. DECEL. & ACCEL.) & 4748.0 S.Y. RAMPS 2 & 4. EXCLUDES BRIDGES A0951 & A0953 OVER ROUTE Z.
4	I-55	686+31.30	687+81.30	NB		625.0		118.3	125.0	RESURFACING FOR 150 FT AFTER BRIDGE NUMBER A0944
4	I-55	689+27.20	690+77.20	NB		625.0		118.3	125.0	RESURFACING FOR 150 FT BEFORE BRIDGE NUMBER A0944
4	I-55	686+30.80	687+80.80	SB		625.0		118.3	125.0	RESURFACING FOR 150 FT AFTER BRIDGE NUMBER A0944
4	I-55	689+23.10	690+73.10	SB		625.0		118.3	125.0	RESURFACING FOR 150 FT BEFORE BRIDGE NUMBER A0944
5	I-55	699+14.00	700+64.00	NB		533.3		100.9	106.7	RESURFACING FOR 150 FT AFTER BRIDGE NUMBER A0945
5	I-55	704+59.80	706+09.80	NB		533.3		100.9	106.7	RESURFACING FOR 150 FT BEFORE BRIDGE NUMBER A0945
5	I-55	699+54.10	701+04.10	SB		533.3		100.9	106.7	RESURFACING FOR 150 FT AFTER BRIDGE NUMBER A0945
5	I-55	704+98.40	706+48.40	SB		533.3		100.9	106.7	RESURFACING FOR 150 FT BEFORE BRIDGE NUMBER A0945
2 to 6	I-55	642+97.90	725+52.50	NB	21338.7		2305.0		2133.9	BRIDGE EXCEPTIONS ON A0944 & A0945.
2 to 6	I-55	643+64.30	725+72.20	SB	21213.9		2291.6		2121.4	BRIDGE EXCEPTIONS ON A0944 & A0945.
6	I-55	740+78.60	742+28.60	NB		625.0		118.3	125.0	RESURFACING FOR 150 FT AFTER BRIDGE NUMBER A0946
6	I-55	743+62.10	745+12.10	NB		625.0		118.3	125.0	RESURFACING FOR 150 FT BEFORE BRIDGE NUMBER A0946
6	I-55	740+78.20	742+28.20	SB		625.0		118.3	125.0	RESURFACING FOR 150 FT BEFORE BRIDGE NUMBER A0946
6	I-55	743+63.80	745+13.80	SB		625.0		118.3	125.0	RESURFACING FOR 150 FT AFTER BRIDGE NUMBER A0946
6 to 7	I-55	725+52.50	760+48.60	NB	12744.6		1376.7		1274.5	11047.1 S.Y. NB MAINLINE (INCL. DECEL. & ACCEL.) & 1697.5 S.Y. RAMPS 1 & 3. EXCLUDE BRIDGE A0946 OVER McNUTT ST.
6 to 7	I-55	725+72.20	760+40.30	SB	12370.0		1336.2		1237.0	10746.2 S.Y. SB MAINLINE (INCL. DECEL. & ACCEL.) & 1623.8 S.Y. RAMPS 2 & 4. EXCLUDE BRIDGE A0946OVER McNUTT ST.
10	I-55	838+27.00	839+77.00	NB		625.0		118.3	125.0	RESURFACING FOR 150 FT AFTER BRIDGE NUMBER A0997
10	I-55	841+68.60	843+18.60	NB		625.0		118.3	125.0	RESURFACING FOR 150 FT BEFORE BRIDGE NUMBER A0997
10	I-55	838+13.60	839+63.60	SB		625.0		118.3	125.0	RESURFACING FOR 150 FT BEFORE BRIDGE NUMBER A0997
10	I-55	841+56.20	843+06.20	SB		625.0		118.3	125.0	RESURFACING FOR 150 FT AFTER BRIDGE NUMBER A0997
11	I-55	860+99.60	862+49.60	NB		625.0		118.3	125.0	RESURFACING FOR 150 FT AFTER BRIDGE NUMBER A0830
11	I-55	863+88.90	865+38.90	NB		625.0		118.3	125.0	RESURFACING FOR 150 FT BEFORE BRIDGE NUMBER A0830
11	I-55	860+93.30	862+43.30	SB		625.0		118.3	125.0	RESURFACING FOR 150 FT BEFORE BRIDGE NUMBER A0830
11	I-55	863+84.90	865+34.90	SB		625.0		118.3	125.0	RESURFACING FOR 150 FT AFTER BRIDGE NUMBER A0830
7 to 11	I-55	760+48.60	872+93.90	NB	29838.0		3223.1		2983.8	BRIDGE EXCEPTIONS ON A0797 & A7867 & A0830. INCLUDES ONE EQUATION.
7 to 11	I-55	760+40.30	879+07.00	SB	31694.1		3423.6		3169.4	BRIDGE EXCEPTIONS ON A0797 & A7867 & A0830. INCLUDES ONE EQUATION.
11 to 12	I-55	872+93.90	909+44.60	NB	14092.1		1522.3		1409.2	12428.9 S.Y. NB MAINLINE (INCL. DECEL. & ACCEL.) & 1663.2 S.Y. RAMPS 1 & 3 OVER ROUTE A.
11 to 13	I-55	879+07.00	913+86.60	SB	13555.1		1464.2		1355.5	12001.5 S.Y. SB MAINLINE (INCL. DECEL. & ACCEL.) & 1553.6 S.Y. RAMPS 2 & 4 OVER ROUTE A.
12 to 13	I-55	909+44.60	931+87.10	NB	6727.5		726.7		672.8	NO EXCEPTIONS HERE
13	I-55	913+86.60	935+08.20	SB	6364.2		687.5		636.4	NO EXCEPTIONS HERE
14	I-55	952+44.90	953+94.90	NB		683.3		129.3	136.7	RESURFACING FOR 150 FT AFTER BRIDGE NUMBER A0799
14	I-55	956+93.30	958+43.30	NB		683.3		129.3	136.7	RESURFACING FOR 150 FT BEFORE BRIDGE NUMBER A0799
14	I-55	952+54.60	954+04.60	SB		683.3		129.3	136.7	RESURFACING FOR 150 FT BEFORE BRIDGE NUMBER A0799
14	I-55	956+02.40	957+52.40	SB		683.3		129.3	136.7	RESURFACING FOR 150 FT AFTER BRIDGE NUMBER A0799
13 to 15	I-55	931+87.10	976+26.40	NB	28537.5		3082.7		2853.8	14052.6 S.Y. NB MAINLINE (INCL. DECEL. & ACCEL.) & 8051.2 S.Y. RAMPS 1 & 7 & 6433.7 S.Y. RAMPS 3 & 5. EXCLUDE BRIDGE A0799 OVER ROUTE 67.
13 to 15	I-55	935+08.20	977+41.60	SB	26611.1		2874.6		2661.1	13214.6 S.Y. SB MAINLINE (INCL. DECEL. & ACCEL.) & 6947.6 S.Y. RAMPS 2 & 8 & 6448.9 S.Y. RAMPS 4 & 6. EXCLUDE BRIDGE A0799 OVER ROUTE 67.
16	I-55	1007+15.20	1008+65.20	NB		633.3		119.8	126.7	RESURFACING FOR 150 FT AFTER BRIDGE NUMBER A2221
16	I-55	1010+58.50	1012+08.50	NB		633.3		119.8	126.7	RESURFACING FOR 150 FT BEFORE BRIDGE NUMBER A2221
16	I-55	1008+00.50	1009+50.50	SB		633.3		119.8	126.7	RESURFACING FOR 150 FT BEFORE BRIDGE NUMBER A2221
16	I-55	1011+34.80	1012+84.80	SB		633.3		119.8	126.7	RESURFACING FOR 150 FT AFTER BRIDGE NUMBER A2221
19	I-55	1026+60.60	1027+10.60	NB		633.3		119.8	126.7	RESURFACING FOR 150 FT AFTER BRIDGE NUMBER A2222
19	I-55	1029+40.30	1030+90.30	NB		633.3		119.8	126.7	RESURFACING FOR 150 FT BEFORE BRIDGE NUMBER A2222
19	I-55	1025+61.10	1027+11.10	SB		633.3		119.8	126.7	RESURFACING FOR 150 FT BEFORE BRIDGE NUMBER A2222
19	I-55	1029+40.80	1030+90.80	SB		633.3		119.8	126.7	RESURFACING FOR 150 FT AFTER BRIDGE NUMBER A2222
15 to 20	I-55	976+26.40	1130+06.20	NB	43070.4		4652.5		4307.0	BRIDGE EXCEPTIONS ON A2221 & A2222.
15 to 19	I-55	977+41.60	1126+60.10	SB	41713.5		4506.0		4171.4	BRIDGE EXCEPTIONS ON A2221 & A2222.
20 to 22	I-55	1130+06.20	1159+57.50	NB	13140.3		1419.4		1314.0	10088.6 S.Y. NB MAINLINE (INCL. DECEL. & ACCEL.) & 3051.7 S.Y. RAMPS 1 & 3. EXCLUDE BRIDGE A2223 OVER ROUTE 61.
19 to 22	I-55	1126+60.10	1164+46.70	SB	17555.7		1896.4		1755.6	12684.8 S.Y. SB MAINLINE (INCL. DECEL. & ACCEL.) & 4870.9 S.Y. RAMPS 2 & 4. EXCLUDE BRIDGE A2223 OVER ROUTE 61.
22 to 33	I-55	1159+57.50	1459+03.0	NB	90405.4	633.3	9765.7	119.8	9167.2	NO EXCEPTIONS HERE. INCLUDES EIGHT EQUATIONS.
22 to 33	I-55	1164+46.70	1458+57.20	SB	88781.2	633.3	9590.3	119.8	9004.8	NO EXCEPTIONS HERE. INCLUDES EIGHT EQUATIONS. ALSO 150 FT RESURF UP TO ISLE OF DES BOIS CREEK BRIDGE
VARIOUS	I-55	AT RAMPS (19 LOCS.)		NB & SB	2679		289.4		267.9	APPROX.141 SY PER LOCATION AT RAMP ACCEL/DECEL LANE NEEDING EXTRA MILL/FILL FOR WEDGE (SEE TYPICAL 9 OF 9)
VARIOUS	I-55	AT RAMPS (24 LOCS.)		NB & SB	5592		604.1		559.2	APPROX. 233 SY PER LOCATION ON RAMPS TO END INTO EXISTING RESURFACING (SEE TYPICAL 9 OF 9)
TOTAL					553162.5	29684.4	59753.5	5365.0	61253.2	
PAY TOTAL					553163	29684	65118.5		61260	

150 FT BEFORE AND AFTER EVERY BRIDGE WILL HAVE VARIABLE DEPTH RESUSRFACING (REFER TO TYPICAL)

STATE OF MISSOURI
SHIRLEY J. NORRIS
NUMBER PE-28779
PROFESSIONAL ENGINEER
THIS SHEET HAS BEEN SIGNED, SEALED AND DATED ELECTRONICALLY.

DATE PREPARED 9/29/2016

ROUTE	STATE
I-55	MO
DISTRICT	SHEET NO.
SL	3

COUNTY JEFFERSON
JOB NO. J6I3110
CONTRACT ID.
PROJECT NO.
BRIDGE NO.

DATE	DESCRIPTION

IF A SEAL IS PRESENT ON THIS SHEET IT HAS BEEN ELECTRONICALLY SEALED AND DATED.

MISSOURI HIGHWAYS AND TRANSPORTATION COMMISSION
105 WEST CAPITOL
JEFFERSON CITY, MO 65102
1-888-ASK-MODOT (1-888-275-6636)

SUMMARY OF QUANTITIES
SHEET 5 OF 7

PERMANENT PAVEMENT MARKING

PVMT. MARKING SHEET X OF X	RDWY	STA	STA	LOCATION	(6" WHITE) HIGH BUILD WATERBORNE PVMT. MARKING PAINT (TYPE L BEADS) (LF)	(6" YELLOW) HIGH BUILD WATERBORNE PVMT. MARKING PAINT (TYPE L BEADS) (LF)	(12" WHITE) HIGH BUILD WATERBORNE PVMT. MARKING PAINT (TYPE L BEADS) (LF)	REMARKS
1-33	I-55	594+26.90	1462+00.00	SB		87171		I-55 EDGE LINES
1-33	I-55	594+26.90	1462+00.00	SB	21854			INTERMITTENT LANE LINES
1	I-55	594+26.90	611+89.52	SB	1772			I-55 EDGE LINES
1-2	I-55	594+26.90	625+71.00	SB	3144			EDGE LINE - RP 2 RTE Z
1	I-55	611+89.52	613+43.78	SB			305	RP 2 RTE Z GORE SPLIT
1-2	I-55	613+43.78	634+99.56	SB	2133			I-55 EDGE LINES
1-2	I-55	613+43.78	625+70.68	SB		1173		EDGE LINE - RP 2 RTE Z
2	I-55	623+54.41	626+07.97	SB	230			TURN LANE - RP 2 RTE Z
2	I-55	625+41.41	626+07.97	SB	87			AROUND ISLAND - RP 2 RTE Z
2	I-55	628+04.69	634+99.56	SB		712		EDGE LINES - RP 4 RTE Z
2-6	I-55	628+04.69	742+11.57	SB	14933			EDGE LINES - RP 4 RTE Z TO RP 2 MCNUTT ST
2	I-55	634+99.56	636+21.85	SB			123	RP 4 RTE Z GORE SPLIT
2	I-55	634+99.56	636+37.83	SB			138	RP 4 RTE Z GORE SPLIT
2	I-55	636+37.83	643+64.66	SB	182			DOTTED LANE LINES - RP 4 RTE Z
6	I-55	725+72.18	731+86.50	SB	154			DOTTED LANE LINES - RP 2 MCNUTT ST
6	I-55	731+86.50	734+03.20	SB			216	RP 2 MCNUTT ST GORE SPLIT
6	I-55	732+35.31	734+03.20	SB			169	RP 2 MCNUTT ST GORE SPLIT
6	I-55	734+03.20	742+11.57	SB		821		EDGE LINES - RP 2 MCNUTT ST
6	I-55	739+85.72	742+63.41	SB	282			TURN LANE - RP 2 MCNUTT ST
6	I-55	734+03.20	751+95.90	SB	1794			I-55 EDGE LINES
6	I-55	743+54.85	751+95.90	SB		854		EDGE LINES - RP 4 MCNUTT ST
6-12	I-55	743+54.85	889+80.81	SB	14933			EDGE LINES - RP 4 MCNUTT ST TO RP 2 RTE A
7	I-55	751+95.90	753+69.23	SB			348	RP 4 MCNUTT ST GORE SPLIT
7	I-55	753+69.23	760+40.32	SB	168			DOTTED LANE LINES - RP 4 MCNUTT ST
11	I-55	880+68.57	882+18.08	SB			300	RP 2 RTE A GORE SPLIT
11	I-55	879+06.85	880+68.57	SB	41			DOTTED LANE LINES RP 2 RTE A
11-12	I-55	882+18.08	904+43.34	SB	2225			EDGE LINES
11-12	I-55	882+18.08	889+80.81	SB		776		EDGE LINES - RP 2 RTE A
12	I-55	885+84.15	889+80.81	SB	100			ACCEL. LANE LINES - RP 2 RTE A
12	I-55	885+11.40	889+80.81	SB	121			INTER. LANE LINES - RP 2 RTE A
12	I-55	895+84.95	904+43.34	SB		878		EDGE LINES - RP 4 RTE A
12	I-55	895+84.95	901+10.00	SB	117			INTER. LANE LINES - RP 4 RTE A
12-14	I-55	895+84.95	953+27.20	SB	6489			EDGE LINES - RP 4 RTE A TO RP 2 RTE 67
12	I-55	904+43.34	906+78.35	SB			473	RP 4 RTE A GORE SPLIT
12-13	I-55	906+78.35	913+86.62	SB	177			DOTTED LANE LINES - RP 4 RTE A
13-14	I-55	935+08.14	940+87.09	SB	145			DOTTED LANE LINES - RP 2 RTE 67
14	I-55	940+87.09	942+34.78	SB			302	RP 2 RTE 67 GORE SPLIT
14	I-55	942+34.78	953+43.90	SB		1824		EDGE LINES - RP 2 RTE 67
14	I-55	942+34.78	950+38.92	SB	806			EDGE LINES
14	I-55	950+38.92	951+95.70	SB			157	RP 4 RTE 67 GORE SPLIT
14	I-55	950+38.92	951+56.44	SB			127	RP 4 RTE 67 GORE SPLIT
14	I-55	954+43.76	950+38.92	SB		1360		EDGE LINES - RP 4 RTE 67
14	I-55	954+43.76	955+90.44	SB	3544			EDGE LINES - RP 4 TO RP 6 RTE 67
14	I-55	951+95.70	957+82.58	SB	147			DOTTED LANE LINES - RP 4 TO RP 6 RTE 67
14	I-55	959+79.17	955+90.44	SB		1406		EDGE LINES - RP 6 RTE 67
14	I-55	957+82.58	959+79.17	SB			195	RP 6 RTE 67 GORE SPLIT
14	I-55	958+34.06	959+79.17	SB			149	RP 6 RTE 67 GORE SPLIT
14-15	I-55	959+79.17	969+91.02	SB	1014			EDGE LINES
14-15	I-55	954+68.34	969+91.02	SB		2052		EDGE LINES - RP 8 RTE 67
14-21	I-55	954+68.34	1042+01.05	SB	19249			EDGE LINES - RP 8 RTE 67 TO RP 2 RTE 61
15	I-55	969+91.02	971+79.05	SB			377	RP 8 RTE 67 GORE SPLIT
15	I-55	971+79.05	977+68.91	SB	148			DOTTED LANE LINES - RP 8 RTE 67
20-21	I-55	1126+60.02	1131+90.14	SB	133			DOTTED LANE LINES - RP 2 RTE 61
21	I-55	1131+90.14	1134+89.28	SB			297	RP 2 RTE 61 GORE SPLIT
21	I-55	1133+12.18	1134+89.28	SB			179	RP 2 RTE 61 GORE SPLIT
21	I-55	1134+89.28	1142+01.05	SB		729		EDGE LINES - RP 2 RTE 61
21	I-55	1140+14.33	1142+22.27	SB	214			TURN LANE - RP 2 RTE 61
21-22	I-55	1134+89.28	1157+75.84	SB	2284			EDGE LINES
21-22	I-55	1143+14.16	1157+75.84	SB		1473		EDGE LINES - RP 4 RTE 61
21-32	I-55	1143+14.16	1447+30.75	SB	30797			EDGE LINES - RP 4 RTE 61 TO RP 2 RTE TT
22	I-55	1161+02.86	1164+46.74	SB	86			DOTTED LANE LINES RP 4 RTE 61
22	I-55	1157+75.84	1161+02.86	SB			531	WHITE LINE
32	I-55	1430+73.00	1435+94.67	SB	131			DOTTED LANE LINES - RP 2 RTE TT
32	I-55	1435+94.67	1438+21.45	SB			227	RP 2 RTE TT GORE SPLIT
32	I-55	1436+94.67	1438+21.45	SB			193	RP 2 RTE TT GORE SPLIT
32	I-55	1438+21.45	1447+30.75	SB		943		EDGE LINES - RP 2 RTE TT
32-33	I-55	1438+21.45	1462+00.00	SB	2377			I-55 EDGE LINES
1-31	I-55	616+50.00	1462+00.00	NB		84550		I-55 EDGE LINES
1-31	I-55	616+50.00	1462+00.00	NB	21138			INTER. LANE LINES
32-33	I-55	1462+00.00	1439+28.37	NB	2271			I-55 EDGE LINES
32	I-55	1439+28.37	1436+73.17	NB			255	RP 1 RTE TT GORE SPLIT
32	I-55	1439+28.37	1437+60.64	NB			173	RP 1 RTE TT GORE SPLIT
32	I-55	1446+89.81	1439+28.37	NB		812		EDGE LINES - RP 1 RTE TT
32	I-55	1436+73.17	1428+14.55	NB	215			DOTTED LANE LINES - RP 1 RTE TT
21-32	I-55	1446+89.81	1146+32.66	NB	30458			EDGE LINES - RP 1 RTE TT TO RP 3 RTE 61
22	I-55	1159+57.50	1155+43.82	NB	104			DOTTED LANE LINES - RP 3 RTE 61
21-22	I-55	1155+43.82	1152+11.69	NB			334	RP 3 RTE 61 GORE SPLIT
21-22	I-55	1154+12.04	1152+11.69	NB			202	RP 3 RTE 61 GORE SPLIT
21	I-55	1152+11.69	1146+32.66	NB		595		EDGE LINES - RP 3 RTE 61
21	I-55	1152+11.69	1137+62.42	NB	1443			EDGE LINES
21	I-55	1137+62.42	1134+74.12	NB			294	RP 1 RTE 61 GORE SPLIT
21	I-55	1137+62.42	1135+67.44	NB			201	RP 1 RTE 61 GORE SPLIT
21	I-55	1134+74.12	1130+06.27	NB	117			DOTTED LANE LINES - RP 1 RTE 61
21	I-55	1144+40.60	1137+62.42	NB		697		EDGE LINES - RP 1 RTE 61
14-21	I-55	1144+40.60	951+92.78	NB	19729			EDGE LINES - RP 1 RTE 61 TO RP 7 RTE 67
15	I-55	976+24.41	970+71.65	NB	139			DOTTED LANE LINES - RP 7 RTE 67
15	I-55	970+28.00	969+27.00	NB			291	RP 7 RTE 67 GORE SPLIT
14-15	I-55	969+27.00	951+92.78	NB		2196		EDGE LINES - RP 7 RTE 67

PERMANENT PAVEMENT MARKING (CONTINUED)

PVMT. MARKING SHEET X OF X	RDWY	STA	STA	LOCATION	(6" WHITE) HIGH BUILD WATERBORNE PVMT. MARKING PAINT (TYPE L BEADS) (LF)	(6" YELLOW) HIGH BUILD WATERBORNE PVMT. MARKING PAINT (TYPE L BEADS) (LF)	(12" WHITE) HIGH BUILD WATERBORNE PVMT. MARKING PAINT (TYPE L BEADS) (LF)	REMARKS
14-15	I-55	969+27.00	959+63.62	NB	961			EDGE LINES
14	I-55	957+94.51	959+63.62	NB			342	RP 5 RTE 67 GORE SPLIT
14	I-55	957+94.51	951+56.44	NB	172			DOTTED LANE LINES - RP 5 TO RP 3 RTE 67
14	I-55	959+63.62	954+99.31	NB		1387		EDGE LINES - RP 5 RTE 67
14	I-55	954+99.31	953+39.40	NB	3372			EDGE LINES - RP 5 TO RP 3 RTE 67
14	I-55	950+28.94	953+39.40	NB		1231		EDGE LINES - RP 3 RTE 67
14	I-55	951+56.44	950+28.94	NB			259	RP 3 RTE 67 GORE SPLIT
14	I-55	950+28.94	941+13.87	NB	910			EDGE LINES
14	I-55	941+13.87	939+11.83	NB			399	RP 1 RTE 67 GORE SPLIT
14	I-55	950+65.50	941+13.87	NB		1668		EDGE LINES - RP 1 RTE 67
13-14	I-55	941+11.83	931+87.43	NB	181			DOTTED LANE LINES - RP 1 RTE 67
12-14	I-55	950+65.50	896+79.50	NB	6061			EDGE LINES - RP 1 RTE 67 TO RP 3 RTE A
12	I-55	906+67.96	904+80.92	NB			373	RP 3 RTE A GORE SPLIT
12	I-55	904+80.92	896+79.50	NB		819		EDGE LINES - RP 3 RTE A
12	I-55	900+50.00	896+79.50	NB	88			ACCEL. LANE LINES - RP 3 RTE A
12	I-55	909+44.58	906+67.96	NB	69			DOTTED LANE LINES - RP 3 RTE A
11-12	I-55	904+80.92	881+30.23	NB	2352			EDGE LINES
11-12	I-55	890+02.20	881+30.23	NB		894		EDGE LINES - RP 1 RTE A
11-12	I-55	890+02.20	884+16.00	NB	150			ACCEL. LANE LINES - RP 1 RTE A
11	I-55	881+30.23	879+26.20	NB			410	RP 1 RTE A GORE SPLIT
11	I-55	879+26.20	872+58.60	NB	167			DOTTED LANE LINES - RP 1 RTE A
6-12	I-55	890+02.20	743+46.87	NB	14950			EDGE LINES - RP 1 RTE A TO RP 3 MCNUTT ST
7	I-55	760+48.59	753+94.44	NB	164			DOTTED LANE LINES - RP 3 MCNUTT ST
6-7	I-55	753+94.44	751+84.83	NB			209	RP 3 MCNUTT ST GORE SPLIT
6-7	I-55	753+28.20	751+84.83	NB			144	RP 3 MCNUTT ST GORE SPLIT
6	I-55	751+84.83	743+46.87	NB		855		EDGE LINES - RP 3 MCNUTT ST
6	I-55	745+07.60	743+19.84	NB	191			TURN LANE - RP 3 MCNUTT ST
6	I-55	743+46.87	743+19.84	NB	56			AROUND ISLAND - RP 3 MCNUTT ST
6	I-55	751+84.83	734+10.34	NB	1774			EDGE LINES
6	I-55	734+10.34	731+57.58	NB			253	RP 1 MCNUTT ST GORE SPLIT
6	I-55	734+10.34	732+19.93	NB			191	RP 1 MCNUTT ST GORE SPLIT
6	I-55	742+02.41	734+10.34	NB		801		EDGE LINES - RP 1 MCNUTT ST
6	I-55	731+57.58	725+52.49	NB	151			DOTTED LANE LINES - RP 1 MCNUTT ST
2-6	I-55	742+02.41	626+10.37	NB	11655			EDGE LINES - RP 1 MCNUTT ST TO RP 3 RTE Z
2	I-55	642+97.88	635+98.52	NB	175			DOTTED LANE LINES - RP 3 RTE Z
2	I-55	635+98.52	634+89.38	NB			221	RP 3 RTE Z GORE SPLIT
2	I-55	634+89.38	626+10.37	NB		914		EDGE LINES - RP 3 RTE Z
2	I-55	627+99.51	625+54.00	NB	275			TURN LANE - RP 3 RTE Z
2	I-55	626+10.37	625+54.00	NB	91			AROUND ISLAND - RP 3 RTE Z
1-2	I-55	634+89.38	613+00.00	NB	2189	1524	469	EDGE LINES & 12"WHITE GORE MARKING RP1
1-2	I-55	624+26.73	609+03.00	NB	1497			EDGE LINES - RP 1 RTE Z
1-2	I-55	624+26.73	615+00.00	NB		1203		EDGE LINES - RP 1 RTE Z
				TOTAL	255276	202318	9826	
				PAY TOTAL	255276	202318	9826	

DISCLAIMER

THE PROFESSIONAL WHOSE SIGNATURE AND PERSONAL SEAL APPEAR HEREON ASSUMES RESPONSIBILITY ONLY FOR WHAT APPEARS ON THIS PAGE, AND DISCLAIMS (PURSUANT TO SECTION 327.411 RSMO) SPECIFICATION, ESTIMATES, REPORTS, OR OTHER DOCUMENTS OR INSTRUMENTS NOT SEALED BY THE UNDERSIGNED PROFESSIONAL RELATING TO OR INTENDED TO BE USED FOR ANY PART OR PARTS OF THE PROJECT TO WHICH THIS PAGE REFERS.

STATE OF MISSOURI
SHIRLEY J. NORRIS
NUMBER PE-28779
PROFESSIONAL ENGINEER
THIS SHEET HAS BEEN SIGNED, SEALED AND DATED ELECTRONICALLY.

DATE PREPARED: 9/29/2016

ROUTE	STATE
I-55	MO
DISTRICT	SHEET NO.
SL	3

COUNTY: JEFFERSON

JOB NO.: J6I3110

CONTRACT ID.

PROJECT NO.

BRIDGE NO.

DATE	DESCRIPTION

IF A SEAL IS PRESENT ON THIS SHEET IT HAS BEEN ELECTRONICALLY SEALED AND DATED.

MISSOURI HIGHWAYS AND TRANSPORTATION COMMISSION

105 WEST CAPITOL
JEFFERSON CITY, MO 65102
1-888-ASK-MODOT (1-888-275-6636)

SUMMARY OF QUANTITIES

SHEET 6 OF 7

FULL DEPTH PAVEMENT REPAIR

PLAN SHEET	RDWY	DIRECTION	LOCATION	WIDTH OF REPAIR REPAIR FT	LENGTH OF REPAIR FT	NUMBER OF REPAIRS PER LOCATION	FURNISH & PLACING CONCRETE (SY)	SUBGRADE COMPACTION (SY)	TYPE 1 OR 5 AGGREGATE FOR BASE (SY)	SAW CUTS (LF)	DOWEL BARS FOR FULL DEPTH PVMT REPAIR (EACH)	DOWEL BARS FOR FULL DEPTH PVMT REPAIR W/BASKET (EA)	TIE BARS FOR FULL DEPTH PVMT REPAIR (EA)
4	I-55	SB	APPROX. STATION 601+76 IN LANE 3 (EXIT LANE)	7	100	1	77.8	7.8	7.8	326	14	49	40
5	I-55	SB	IN LANE 1 JUST NORTH OF RTE Z BRIDGE	14	6	2	18.7	1.9	1.9	80	56	0	0
5	I-55	SB	IN LANE 2 AND SHOULDER NORTH OF RTE Z BRIDGE	12	100	1	133.3	13.3	13.3	416	24	84	40
7	I-55	SB	LANE 2 JUST NORTH OF HERKY HORINE BRIDGE	14	6	2	18.7	1.9	1.9	80	56	0	0
7	I-55	SB	LANE 2 SOUTH OF HERKY HORINE BRIDGE	14	100	1	155.6	15.6	15.6	452	28	98	40
8	I-55	SB	LANE 2 SOUTH OF JOACHIM CREEK BRIDGE	14	100	1	155.6	15.6	15.6	452	28	98	40
8	I-55	SB	LANE 2 NORTH OF JOACHIM CREEK BRIDGE	14	100	1	155.6	15.6	15.6	452	28	98	40
9	I-55	SB	LANE 2 NORTH OF MCNUTT BRIDGE	14	100	1	155.6	15.6	15.6	452	28	98	40
VARIOUS	I-55	SB	VARIOUS LOCATIONS	14	6	20	186.7	18.7	18.7	800	560	0	0
26	I-55	NB	LANE 1 @ APPROX. MM 165.00 (COUNTY LINE)	14	6	3	28.0	2.8	2.8	120	84	0	0
26	I-55	NB	LANE 2 @ APPROX. MM 165.00 (COUNTY LINE)	14	6	3	28.0	2.8	2.8	120	84	0	0
VARIOUS	I-55	NB	VARIOUS LOCATIONS	14	6	20	186.7	18.7	18.7	800	560	0	0
						TOTAL	1300.0	130.0	130.0	4550	1550	525	240
						ADD 15% FOR LOCATIONS AS DIRECTED BY THE ENGINEER	195.0	19.5	19.5	683	233	79	36
						PAY TOTAL	1495.0	150	150	5233	1783	604	276

DISCLAIMER

THE PROFESSIONAL WHOSE SIGNATURE AND PERSONAL SEAL APPEAR HEREON ASSUMES RESPONSIBILITY ONLY FOR WHAT APPEARS ON THIS PAGE, AND DISCLAIMS (PURSUANT TO SECTION 327.411 RSMO) SPECIFICATION, ESTIMATES, REPORTS, OR OTHER DOCUMENTS OR INSTRUMENTS NOT SEALED BY THE UNDERSIGNED PROFESSIONAL RELATING TO OR INTENDED TO BE USED FOR ANY PART OR PARTS OF THE PROJECT TO WHICH THIS PAGE REFERS.

STATE OF MISSOURI
SHIRLEY J. NORRIS
NUMBER PE-28779
PROFESSIONAL ENGINEER

THIS SHEET HAS BEEN SIGNED, SEALED AND DATED ELECTRONICALLY.

DATE PREPARED: 9/29/2016

ROUTE	STATE
I-55	MO
DISTRICT	SHEET NO.
SL	3

COUNTY: JEFFERSON

JOB NO.: J6I3110

CONTRACT ID.

PROJECT NO.

BRIDGE NO.

DATE	DESCRIPTION

MISSOURI HIGHWAYS AND TRANSPORTATION COMMISSION

105 WEST CAPITOL
JEFFERSON CITY, MO 65102
1-888-ASK-MODOT (1-888-275-6636)

IF A SEAL IS PRESENT ON THIS SHEET IT HAS BEEN ELECTRONICALLY SEALED AND DATED.

SUMMARY OF QUANTITIES

SHEET 7 OF 7

ANY WORK INDICATED ON THE PLANS THAT EXTENDS BEYOND THE PROJECT LIMITS IS CONSIDERED INCIDENTAL TO AND A PART OF THE CONSTRUCTION OF THIS PROJECT.

DISCLAIMER
THE PROFESSIONAL WHOSE SIGNATURE AND PERSONAL SEAL APPEAR HEREON ASSUMES RESPONSIBILITY ONLY FOR WHAT APPEARS ON THIS PAGE, AND DISCLAIMS (PURSUANT TO SECTION 327.411 RSMO) SPECIFICATION, ESTIMATES, REPORTS, OR OTHER DOCUMENTS OR INSTRUMENTS NOT SEALED BY THE UNDERSIGNED PROFESSIONAL RELATING TO OR INTENDED TO BE USED FOR ANY PART OR PARTS OF THE PROJECT TO WHICH THIS PAGE REFERS.

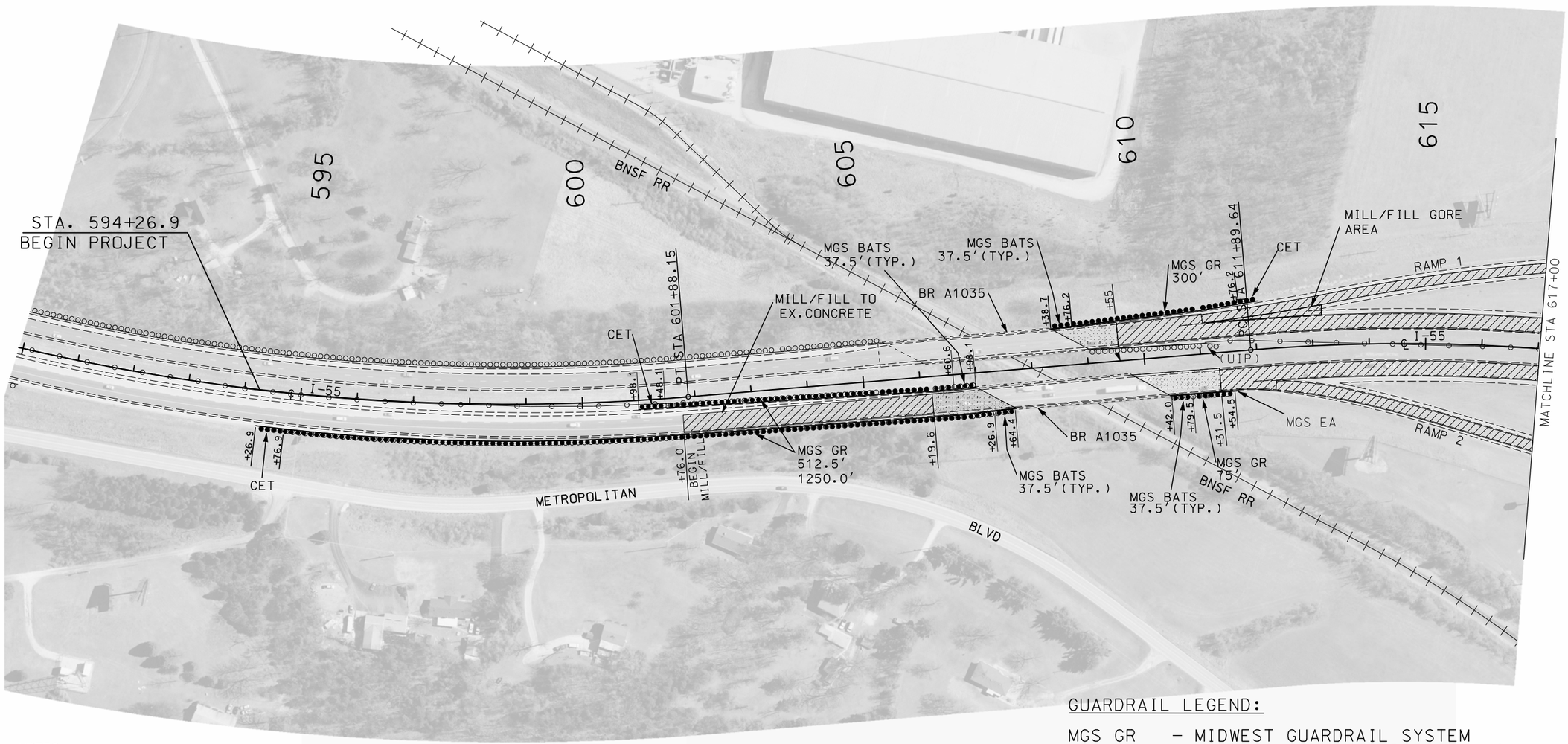

NOTES:

NO DIRECT PAYMENT WILL BE MADE FOR ANY NECESSARY CLEARING AND GRUBBING

EXISTING SIGNS NOT BEING ALTERED OR REPLACED NOT SHOWN ON PLAN SHEETS FOR CLARITY

MODIFIED COLDMILL & RESURFACING

COLDMILL & RESURFACING

EXCEPTION (PROJ. J6I3131)

GUARDRAIL LEGEND:

MGS GR – MIDWEST GUARDRAIL SYSTEM (GUARDRAIL – STANDARD SPACING)

MGS BATS – MIDWEST GUARDRAIL SYSTEM (BRIDGE APPROACH TRANSITION SECTION) (37.5' IN LENGTH (TYPICAL)

CET – TYPE A CRASHWORTHY END TERMINAL– MASH

MGS EA – MIDWEST GUARDRAIL SYSTEM (END ANCHOR)

SCALE
0 100 200 300 400 500

STATE OF MISSOURI
SHIRLEY J. NORRIS
NUMBER PE-28779
PROFESSIONAL ENGINEER
THIS SHEET HAS BEEN SIGNED, SEALED AND DATED ELECTRONICALLY.

DATE PREPARED	
9/29/2016	
ROUTE	STATE
I-55	MO
DISTRICT	SHEET NO.
SL	4
COUNTY	
JEFFERSON	
JOB NO.	
J6I3110	
CONTRACT ID.	
PROJECT NO.	
BRIDGE NO.	

DATE	DESCRIPTION

IF A SEAL IS PRESENT ON THIS SHEET IT HAS BEEN ELECTRONICALLY SEALED AND DATED.

MISSOURI HIGHWAYS AND TRANSPORTATION COMMISSION
105 WEST CAPITOL
JEFFERSON CITY, MO 65102
1-888-ASK-MODOT (1-888-275-6636)

PLAN SHEET
SHEET 1 OF 33

DISCLAIMER
THE PROFESSIONAL WHOSE SIGNATURE AND PERSONAL SEAL APPEAR HEREON ASSUMES RESPONSIBILITY ONLY FOR WHAT APPEARS ON THIS PAGE, AND DISCLAIMS (PURSUANT TO SECTION 327.411 RSMO) SPECIFICATION, ESTIMATES, REPORTS, OR OTHER DOCUMENTS OR INSTRUMENTS NOT SEALED BY THE UNDERSIGNED PROFESSIONAL RELATING TO OR INTENDED TO BE USED FOR ANY PART OR PARTS OF THE PROJECT TO WHICH THIS PAGE REFERS.

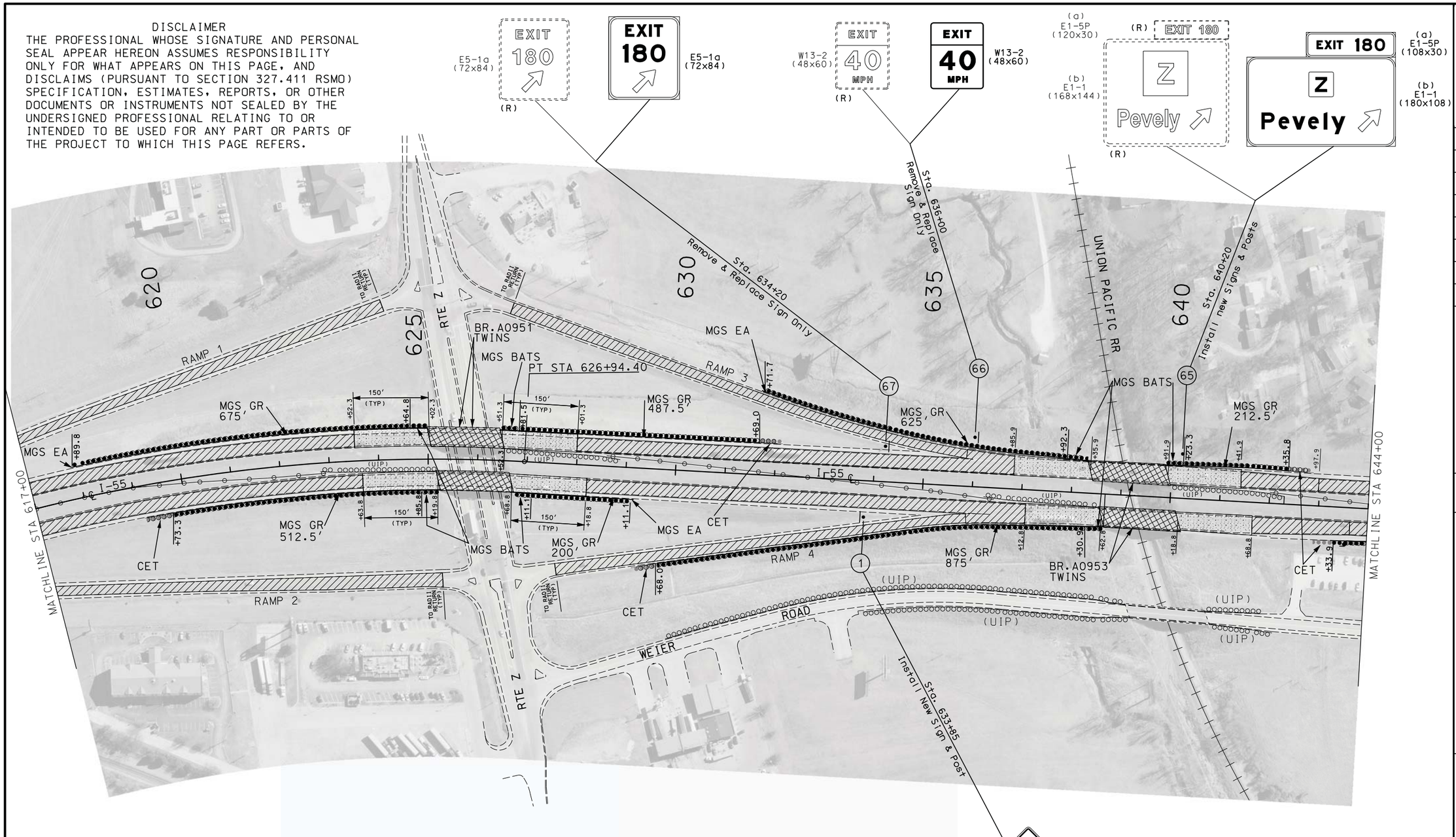

MODIFIED COLDMILL & RESURFACING

COLDMILL & RESURFACING

EXCEPTION (PROJ. J6I3131)

GUARDRAIL LEGEND:

MGS GR - MIDWEST GUARDRAIL SYSTEM (GUARDRAIL - STANDARD SPACING)

MGS BATS - MIDWEST GUARDRAIL SYSTEM (BRIDGE APPROACH TRANSITION SECTION) (37.5' IN LENGTH (TYPICAL)

CET - TYPE A CRASHWORTHY END TERMINAL- MASH

MGS EA - MIDWEST GUARDRAIL SYSTEM (END ANCHOR)

SCALE
0 100 200 300 400 500

STATE OF MISSOURI
SHIRLEY J. NORRIS
NUMBER PE-28779
PROFESSIONAL ENGINEER
THIS SHEET HAS BEEN SIGNED, SEALED AND DATED ELECTRONICALLY.

DATE PREPARED	
10/20/2016	
ROUTE	STATE
I-55	MO
DISTRICT	SHEET NO.
SL	5
COUNTY	
JEFFERSON	
JOB NO.	
J6I3110	
CONTRACT ID.	
PROJECT NO.	
BRIDGE NO.	

DATE	DESCRIPTION

IF A SEAL IS PRESENT ON THIS SHEET IT HAS BEEN ELECTRONICALLY SEALED AND DATED.

MISSOURI HIGHWAYS AND TRANSPORTATION COMMISSION
105 WEST CAPITOL
JEFFERSON CITY, MO 65102
1-888-ASK-MODOT (1-888-275-6636)

PLAN SHEET
SHEET 2 OF 33

GUARDRAIL LEGEND:

MGS GR - MIDWEST GUARDRAIL SYSTEM (GUARDRAIL - STANDARD SPACING)

MGS BATS - MIDWEST GUARDRAIL SYSTEM (BRIDGE APPROACH TRANSITION SECTION) (37.5' IN LENGTH (TYPICAL)

CET - TYPE A CRASHWORTHY END TERMINAL- MASH

MGS EA - MIDWEST GUARDRAIL SYSTEM (END ANCHOR)

DISCLAIMER

THE PROFESSIONAL WHOSE SIGNATURE AND PERSONAL SEAL APPEAR HEREON ASSUMES RESPONSIBILITY ONLY FOR WHAT APPEARS ON THIS PAGE, AND DISCLAIMS (PURSUANT TO SECTION 327.411 RSMO) SPECIFICATION, ESTIMATES, REPORTS, OR OTHER DOCUMENTS OR INSTRUMENTS NOT SEALED BY THE UNDERSIGNED PROFESSIONAL RELATING TO OR INTENDED TO BE USED FOR ANY PART OR PARTS OF THE PROJECT TO WHICH THIS PAGE REFERS.

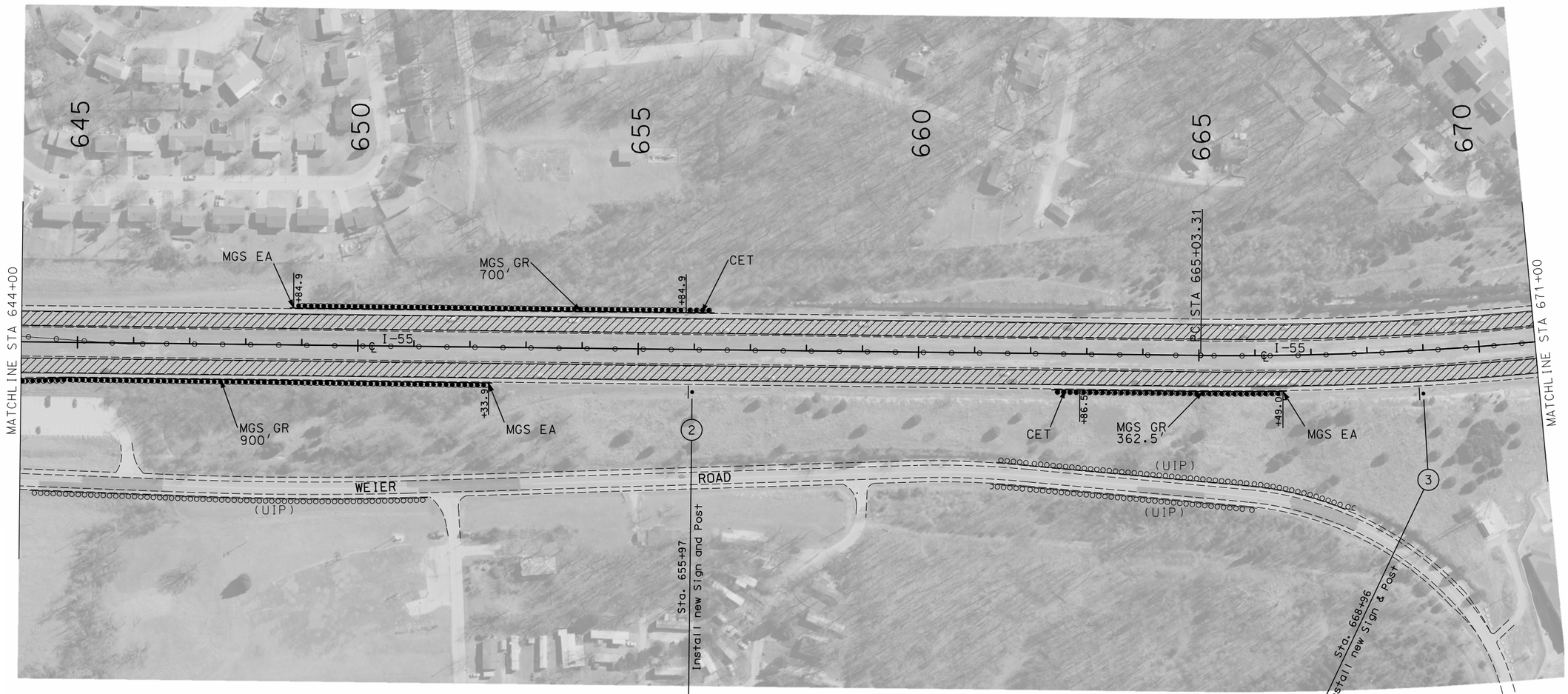

MODIFIED COLDMILL & RESURFACING

COLDMILL & RESURFACING

EXCEPTION (PROJ. J6I3131)

SPEED LIMIT 70 (R)

R2-1 (48x60)

SPEED LIMIT 70 MINIMUM 40

R2-4a (48x96)

D2-3 (120x48)

Herculaneum	1 1/4
Festus	4
Cape Girardeau	80

(R)

D2-3 (132x60)

Festus	4
Crystal City	5
Cape Girardeau	80

SCALE

0 100 200 300 400 500

STATE OF MISSOURI
SHIRLEY J. NORRIS
NUMBER PE-28779
PROFESSIONAL ENGINEER

THIS SHEET HAS BEEN SIGNED, SEALED AND DATED ELECTRONICALLY.

DATE PREPARED	10/20/2016
ROUTE	I-55
STATE	MO
DISTRICT	SL
SHEET NO.	6
COUNTY	JEFFERSON
JOB NO.	J6I3110
CONTRACT ID.	
PROJECT NO.	
BRIDGE NO.	

DATE	DESCRIPTION

IF A SEAL IS PRESENT ON THIS SHEET IT HAS BEEN ELECTRONICALLY SEALED AND DATED.

MISSOURI HIGHWAYS AND TRANSPORTATION COMMISSION

105 WEST CAPITOL
JEFFERSON CITY, MO 65102
1-888-ASK-MODOT (1-888-275-6636)

PLAN SHEET
SHEET 3 OF 33

DISCLAIMER
THE PROFESSIONAL WHOSE SIGNATURE AND PERSONAL SEAL APPEAR HEREON ASSUMES RESPONSIBILITY ONLY FOR WHAT APPEARS ON THIS PAGE, AND DISCLAIMS (PURSUANT TO SECTION 327.411 RSMO) SPECIFICATION, ESTIMATES, REPORTS, OR OTHER DOCUMENTS OR INSTRUMENTS NOT SEALED BY THE UNDERSIGNED PROFESSIONAL RELATING TO OR INTENDED TO BE USED FOR ANY PART OR PARTS OF THE PROJECT TO WHICH THIS PAGE REFERS.

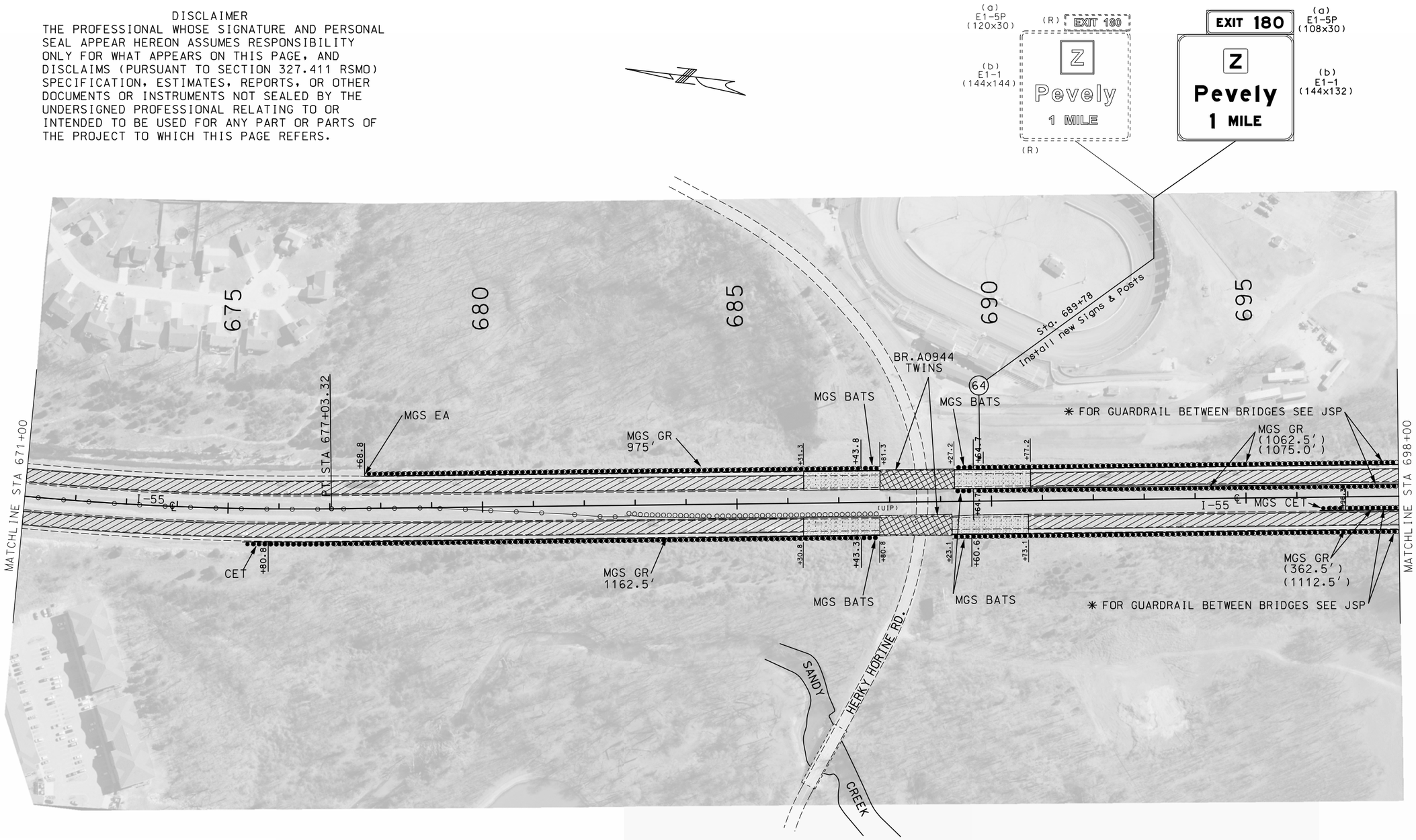

MODIFIED COLDMILL & RESURFACING

COLDMILL & RESURFACING

EXCEPTION (PROJ. J6I3131)

GUARDRAIL LEGEND:

MGS GR – MIDWEST GUARDRAIL SYSTEM (GUARDRAIL – STANDARD SPACING)

MGS BATS – MIDWEST GUARDRAIL SYSTEM (BRIDGE APPROACH TRANSITION SECTION) (37.5' IN LENGTH (TYPICAL)

CET – TYPE A CRASHWORTHY END TERMINAL– MASH

MGS EA – MIDWEST GUARDRAIL SYSTEM (END ANCHOR)

SCALE
0 100 200 300 400 500

STATE OF MISSOURI
SHIRLEY J. NORRIS
NUMBER PE-28779
PROFESSIONAL ENGINEER
THIS SHEET HAS BEEN SIGNED, SEALED AND DATED ELECTRONICALLY.

DATE PREPARED	10/20/2016
ROUTE	I-55
STATE	MO
DISTRICT	SL
SHEET NO.	7
COUNTY	JEFFERSON
JOB NO.	J6I3110
CONTRACT ID.	
PROJECT NO.	
BRIDGE NO.	

DESCRIPTION | DATE

IF A SEAL IS PRESENT ON THIS SHEET IT HAS BEEN ELECTRONICALLY SEALED AND DATED.

MISSOURI HIGHWAYS AND TRANSPORTATION COMMISSION
105 WEST CAPITOL
JEFFERSON CITY, MO 65102
1-888-ASK-MODOT (1-888-275-6636)

PLAN SHEET
SHEET 4 OF 33

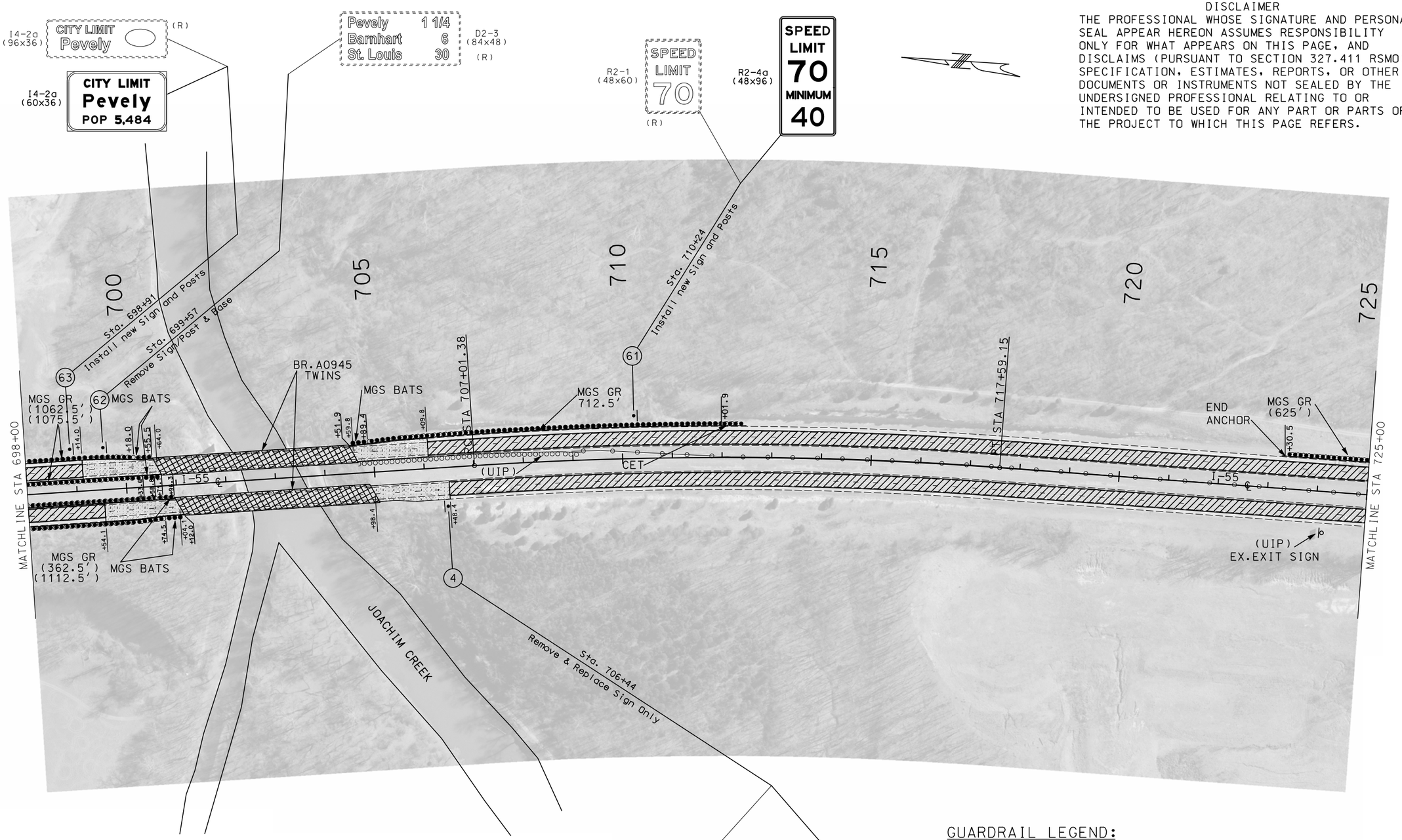

DISCLAIMER

THE PROFESSIONAL WHOSE SIGNATURE AND PERSONAL SEAL APPEAR HEREON ASSUMES RESPONSIBILITY ONLY FOR WHAT APPEARS ON THIS PAGE, AND DISCLAIMS (PURSUANT TO SECTION 327.411 RSMO) SPECIFICATION, ESTIMATES, REPORTS, OR OTHER DOCUMENTS OR INSTRUMENTS NOT SEALED BY THE UNDERSIGNED PROFESSIONAL RELATING TO OR INTENDED TO BE USED FOR ANY PART OR PARTS OF THE PROJECT TO WHICH THIS PAGE REFERS.

MODIFIED COLDMILL & RESURFACING

COLDMILL & RESURFACING

EXCEPTION (PROJ. J6I3131)

GUARDRAIL LEGEND:

MGS GR - MIDWEST GUARDRAIL SYSTEM (GUARDRAIL - STANDARD SPACING)

MGS BATS - MIDWEST GUARDRAIL SYSTEM (BRIDGE APPROACH TRANSITION SECTION) (37.5' IN LENGTH (TYPICAL)

CET - TYPE A CRASHWORTHY END TERMINAL- MASH

MGS EA - MIDWEST GUARDRAIL SYSTEM (END ANCHOR)

STATE OF MISSOURI
SHIRLEY J. NORRIS
NUMBER PE-28779
PROFESSIONAL ENGINEER

THIS SHEET HAS BEEN SIGNED, SEALED AND DATED ELECTRONICALLY.

DATE PREPARED	10/20/2016
ROUTE	I-55
STATE	MO
DISTRICT	SL
SHEET NO.	8
COUNTY	JEFFERSON
JOB NO.	J6I3110
CONTRACT ID.	
PROJECT NO.	
BRIDGE NO.	

DATE	DESCRIPTION

IF A SEAL IS PRESENT ON THIS SHEET IT HAS BEEN ELECTRONICALLY SEALED AND DATED.

MISSOURI HIGHWAYS AND TRANSPORTATION COMMISSION

105 WEST CAPITOL
JEFFERSON CITY, MO 65102
1-888-ASK-MODOT (1-888-275-6636)

PLAN SHEET
SHEET 5 OF 33

GUARDRAIL LEGEND:

MGS GR - MIDWEST GUARDRAIL SYSTEM (GUARDRAIL - STANDARD SPACING)

MGS BATS - MIDWEST GUARDRAIL SYSTEM (BRIDGE APPROACH TRANSITION SECTION) (37.5' IN LENGTH (TYPICAL)

CET - TYPE A CRASHWORTHY END TERMINAL- MASH

MGS EA - MIDWEST GUARDRAIL SYSTEM (END ANCHOR)

DISCLAIMER

THE PROFESSIONAL WHOSE SIGNATURE AND PERSONAL SEAL APPEAR HEREON ASSUMES RESPONSIBILITY ONLY FOR WHAT APPEARS ON THIS PAGE, AND DISCLAIMS (PURSUANT TO SECTION 327.411 RSMO) SPECIFICATION, ESTIMATES, REPORTS, OR OTHER DOCUMENTS OR INSTRUMENTS NOT SEALED BY THE UNDERSIGNED PROFESSIONAL RELATING TO OR INTENDED TO BE USED FOR ANY PART OR PARTS OF THE PROJECT TO WHICH THIS PAGE REFERS.

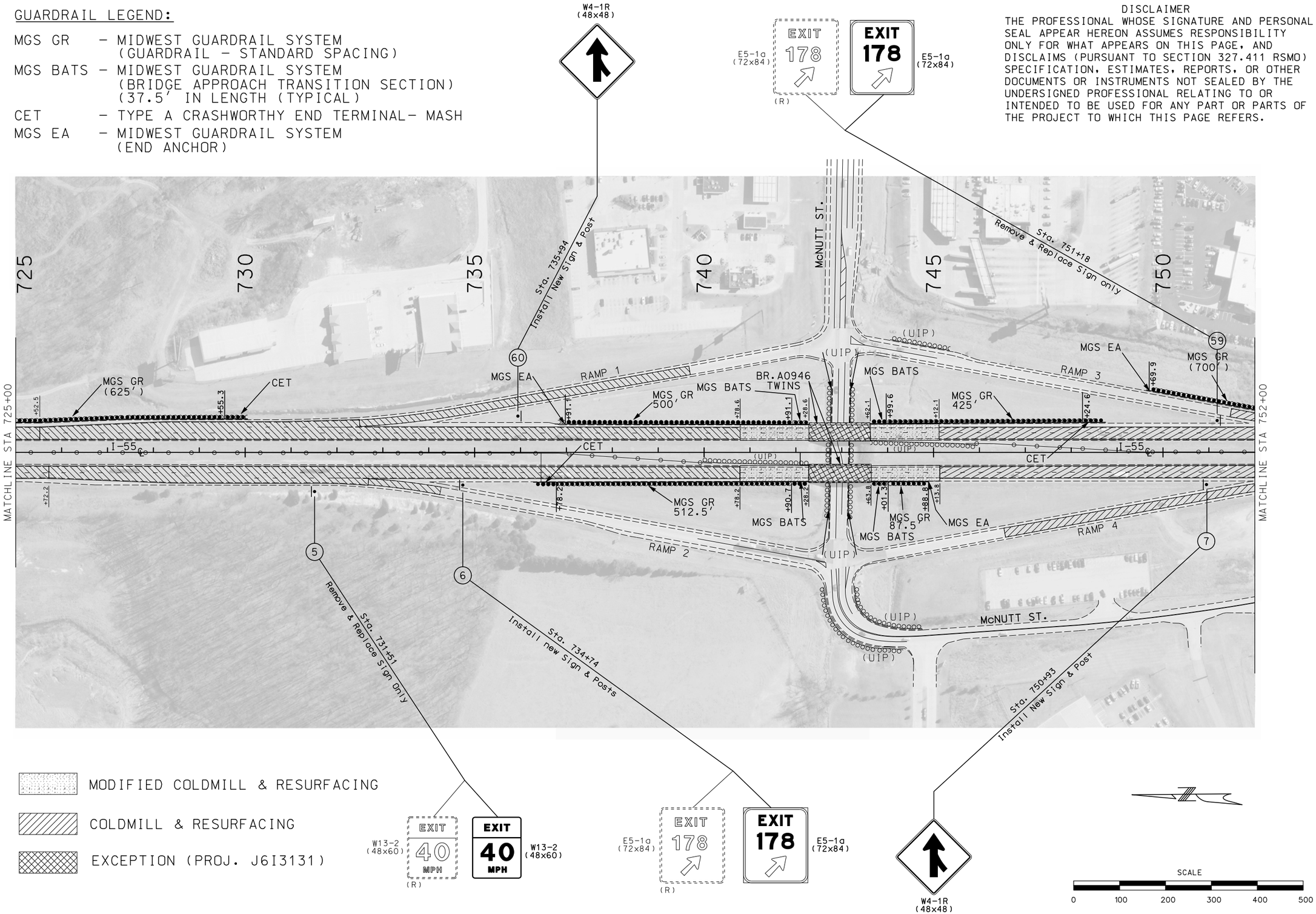

STATE OF MISSOURI
SHIRLEY J. NORRIS
NUMBER PE-28779
PROFESSIONAL ENGINEER

THIS SHEET HAS BEEN SIGNED, SEALED AND DATED ELECTRONICALLY.

DATE PREPARED	
9/29/2016	
ROUTE	STATE
I-55	MO
DISTRICT	SHEET NO.
SL	9
COUNTY	
JEFFERSON	
JOB NO.	
J6I3110	
CONTRACT ID.	
PROJECT NO.	
BRIDGE NO.	

DATE	DESCRIPTION

IF A SEAL IS PRESENT ON THIS SHEET IT HAS BEEN ELECTRONICALLY SEALED AND DATED.

MISSOURI HIGHWAYS AND TRANSPORTATION COMMISSION

105 WEST CAPITOL
JEFFERSON CITY, MO 65102
1-888-ASK-MODOT (1-888-275-6636)

PLAN SHEET
SHEET 6 OF 33

GUARDRAIL LEGEND:

MGS GR - MIDWEST GUARDRAIL SYSTEM (GUARDRAIL - STANDARD SPACING)

MGS BATS - MIDWEST GUARDRAIL SYSTEM (BRIDGE APPROACH TRANSITION SECTION) (37.5' IN LENGTH (TYPICAL)

CET - TYPE A CRASHWORTHY END TERMINAL- MASH

MGS EA - MIDWEST GUARDRAIL SYSTEM (END ANCHOR)

DISCLAIMER

THE PROFESSIONAL WHOSE SIGNATURE AND PERSONAL SEAL APPEAR HEREON ASSUMES RESPONSIBILITY ONLY FOR WHAT APPEARS ON THIS PAGE, AND DISCLAIMS (PURSUANT TO SECTION 327.411 RSMO) SPECIFICATION, ESTIMATES, REPORTS, OR OTHER DOCUMENTS OR INSTRUMENTS NOT SEALED BY THE UNDERSIGNED PROFESSIONAL RELATING TO OR INTENDED TO BE USED FOR ANY PART OR PARTS OF THE PROJECT TO WHICH THIS PAGE REFERS.

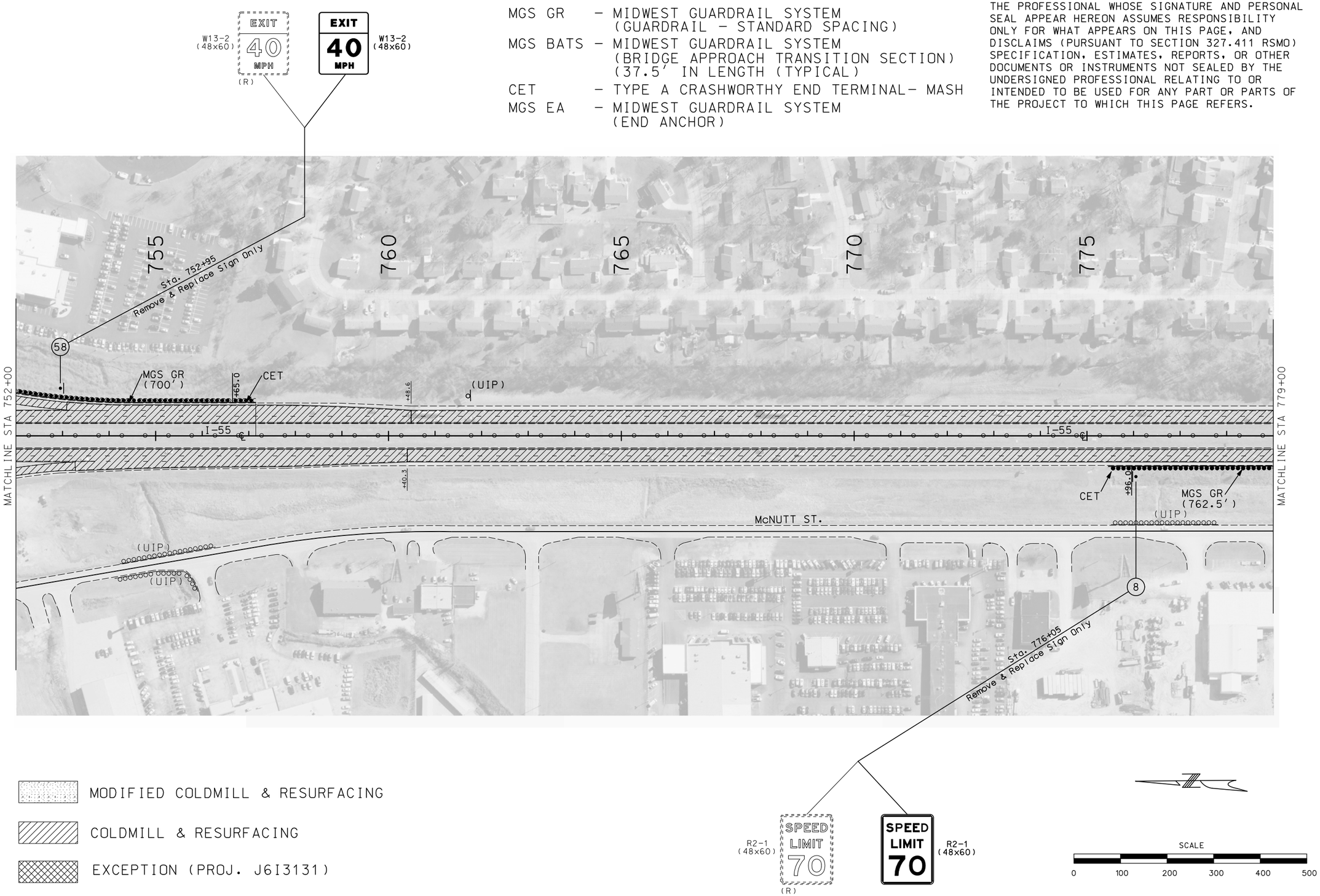

MODIFIED COLDMILL & RESURFACING

COLDMILL & RESURFACING

EXCEPTION (PROJ. J6I3131)

STATE OF MISSOURI
SHIRLEY J. NORRIS
NUMBER PE-28779
PROFESSIONAL ENGINEER

THIS SHEET HAS BEEN SIGNED, SEALED AND DATED ELECTRONICALLY.

DATE PREPARED	
9/29/2016	
ROUTE	STATE
I-55	MO
DISTRICT	SHEET NO.
SL	10
COUNTY	
JEFFERSON	
JOB NO.	
J6I3110	
CONTRACT ID.	
PROJECT NO.	
BRIDGE NO.	

DATE	DESCRIPTION

IF A SEAL IS PRESENT ON THIS SHEET IT HAS BEEN ELECTRONICALLY SEALED AND DATED.

MISSOURI HIGHWAYS AND TRANSPORTATION COMMISSION

105 WEST CAPITOL
JEFFERSON CITY, MO 65102
1-888-ASK-MODOT (1-888-275-6636)

PLAN SHEET
SHEET 7 OF 33

MODIFIED COLDMILL & RESURFACING

COLDMILL & RESURFACING

EXCEPTION (PROJ. J6I3131)

DISCLAIMER

THE PROFESSIONAL WHOSE SIGNATURE AND PERSONAL SEAL APPEAR HEREON ASSUMES RESPONSIBILITY ONLY FOR WHAT APPEARS ON THIS PAGE, AND DISCLAIMS (PURSUANT TO SECTION 327.411 RSMO) SPECIFICATION, ESTIMATES, REPORTS, OR OTHER DOCUMENTS OR INSTRUMENTS NOT SEALED BY THE UNDERSIGNED PROFESSIONAL RELATING TO OR INTENDED TO BE USED FOR ANY PART OR PARTS OF THE PROJECT TO WHICH THIS PAGE REFERS.

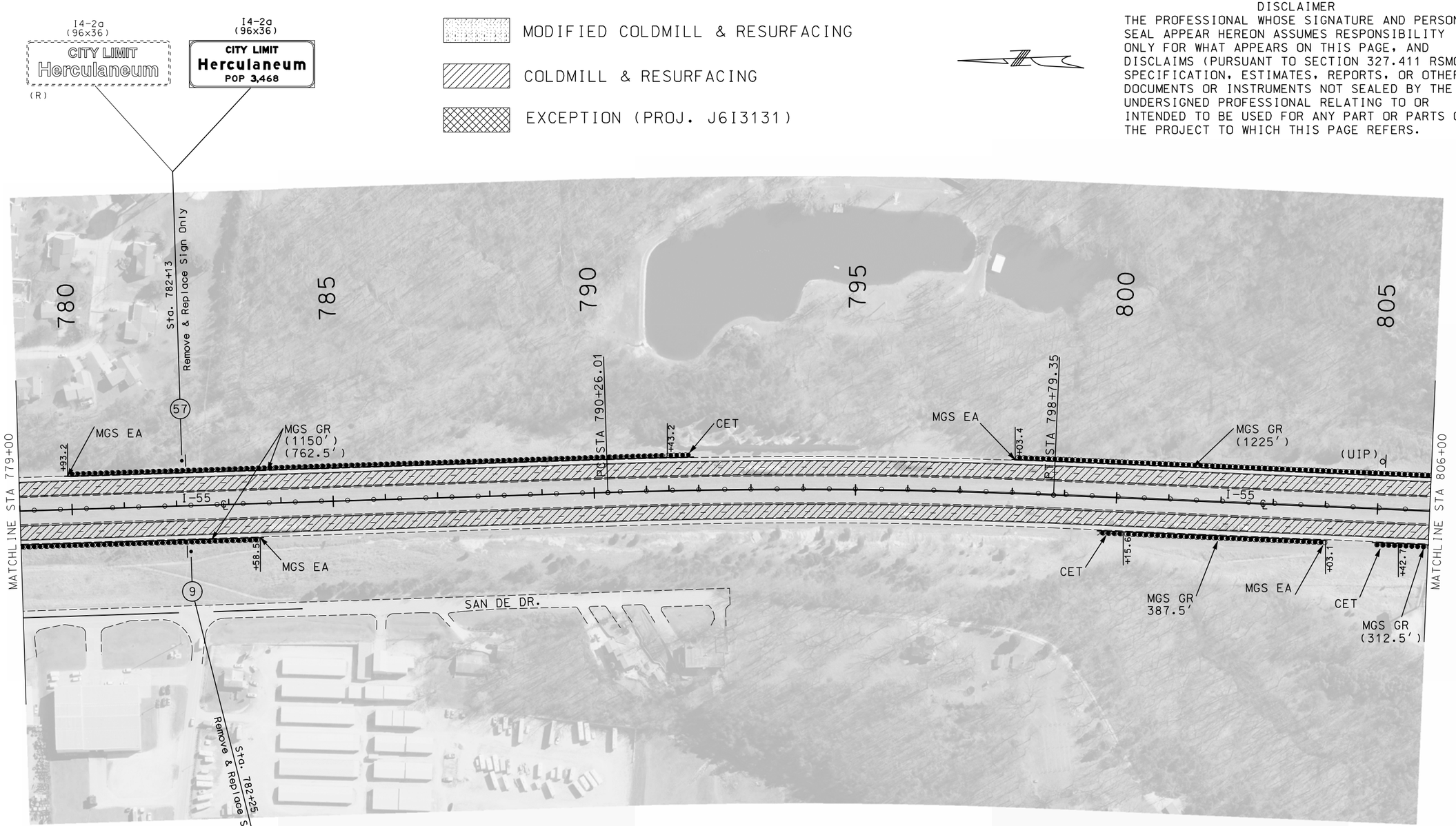

GUARDRAIL LEGEND:

MGS GR - MIDWEST GUARDRAIL SYSTEM (GUARDRAIL - STANDARD SPACING)

MGS BATS - MIDWEST GUARDRAIL SYSTEM (BRIDGE APPROACH TRANSITION SECTION) (37.5' IN LENGTH (TYPICAL)

CET - TYPE A CRASHWORTHY END TERMINAL- MASH

MGS EA - MIDWEST GUARDRAIL SYSTEM (END ANCHOR)

SCALE

0 100 200 300 400 500

STATE OF MISSOURI
SHIRLEY J. NORRIS
NUMBER PE-28779
PROFESSIONAL ENGINEER

THIS SHEET HAS BEEN SIGNED, SEALED AND DATED ELECTRONICALLY.

DATE PREPARED	9/29/2016
ROUTE	I-55
STATE	MO
DISTRICT	SL
SHEET NO.	11
COUNTY	JEFFERSON
JOB NO.	J6I3110
CONTRACT ID.	
PROJECT NO.	
BRIDGE NO.	

DESCRIPTION

DATE

IF A SEAL IS PRESENT ON THIS SHEET IT HAS BEEN ELECTRONICALLY SEALED AND DATED.

MISSOURI HIGHWAYS AND TRANSPORTATION COMMISSION

105 WEST CAPITOL
JEFFERSON CITY, MO 65102
1-888-ASK-MODOT (1-888-275-6636)

PLAN SHEET
SHEET 8 OF 33

DISCLAIMER

THE PROFESSIONAL WHOSE SIGNATURE AND PERSONAL SEAL APPEAR HEREON ASSUMES RESPONSIBILITY ONLY FOR WHAT APPEARS ON THIS PAGE, AND DISCLAIMS (PURSUANT TO SECTION 327.411 RSMO) SPECIFICATION, ESTIMATES, REPORTS, OR OTHER DOCUMENTS OR INSTRUMENTS NOT SEALED BY THE UNDERSIGNED PROFESSIONAL RELATING TO OR INTENDED TO BE USED FOR ANY PART OR PARTS OF THE PROJECT TO WHICH THIS PAGE REFERS.

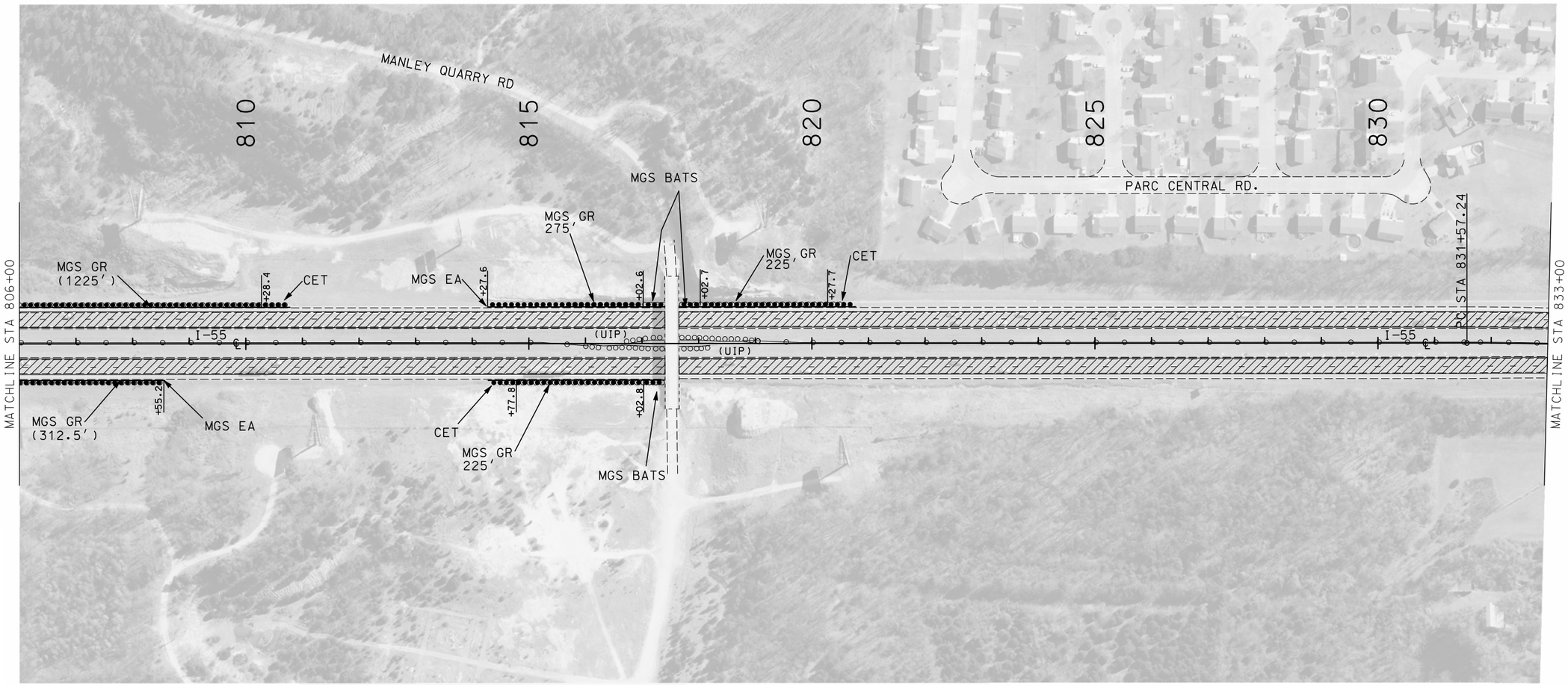

MODIFIED COLDMILL & RESURFACING

COLDMILL & RESURFACING

EXCEPTION (PROJ. J6I3131)

GUARDRAIL LEGEND:

MGS GR - MIDWEST GUARDRAIL SYSTEM (GUARDRAIL - STANDARD SPACING)

MGS BATS - MIDWEST GUARDRAIL SYSTEM (BRIDGE APPROACH TRANSITION SECTION) (37.5' IN LENGTH (TYPICAL)

CET - TYPE A CRASHWORTHY END TERMINAL- MASH

MGS EA - MIDWEST GUARDRAIL SYSTEM (END ANCHOR)

SCALE

0 100 200 300 400 500

STATE OF MISSOURI
SHIRLEY J. NORRIS
NUMBER PE-28779
PROFESSIONAL ENGINEER

THIS SHEET HAS BEEN SIGNED, SEALED AND DATED ELECTRONICALLY.

DATE PREPARED	9/29/2016
ROUTE	I-55
STATE	MO
DISTRICT	SL
SHEET NO.	12
COUNTY	JEFFERSON
JOB NO.	J6I3110
CONTRACT ID.	
PROJECT NO.	
BRIDGE NO.	

DATE	DESCRIPTION

IF A SEAL IS PRESENT ON THIS SHEET IT HAS BEEN ELECTRONICALLY SEALED AND DATED.

MISSOURI HIGHWAYS AND TRANSPORTATION COMMISSION

105 WEST CAPITOL
JEFFERSON CITY, MO 65102
1-888-ASK-MODOT (1-888-275-6636)

PLAN SHEET
SHEET 9 OF 33

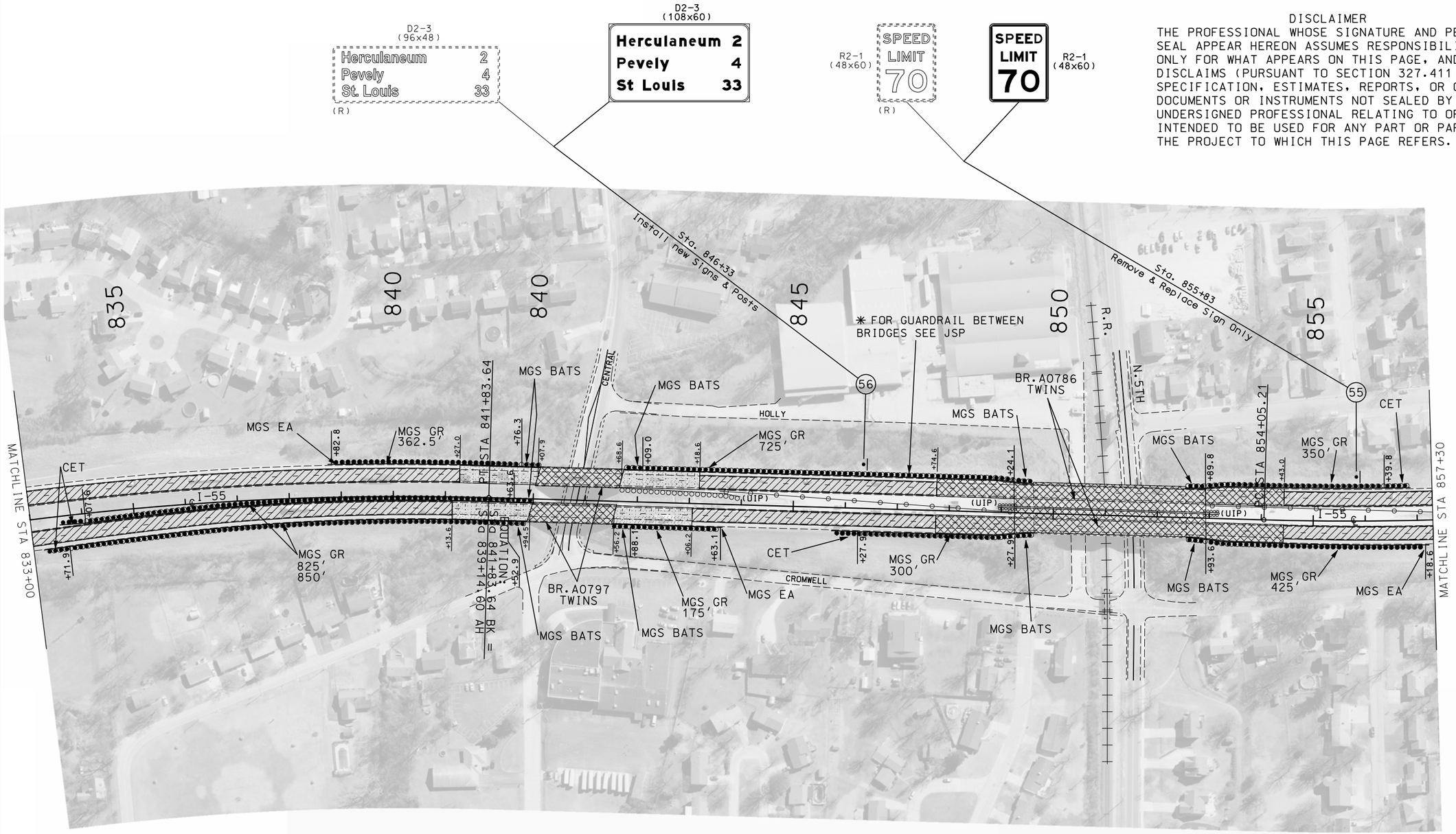

DISCLAIMER

THE PROFESSIONAL WHOSE SIGNATURE AND PERSONAL SEAL APPEAR HEREON ASSUMES RESPONSIBILITY ONLY FOR WHAT APPEARS ON THIS PAGE, AND DISCLAIMS (PURSUANT TO SECTION 327.411 RSMO) SPECIFICATION, ESTIMATES, REPORTS, OR OTHER DOCUMENTS OR INSTRUMENTS NOT SEALED BY THE UNDERSIGNED PROFESSIONAL RELATING TO OR INTENDED TO BE USED FOR ANY PART OR PARTS OF THE PROJECT TO WHICH THIS PAGE REFERS.

MODIFIED COLDMILL & RESURFACING

COLDMILL & RESURFACING

EXCEPTION (PROJ. J6I3131)

GUARDRAIL LEGEND:

MGS GR – MIDWEST GUARDRAIL SYSTEM (GUARDRAIL – STANDARD SPACING)

MGS BATS – MIDWEST GUARDRAIL SYSTEM (BRIDGE APPROACH TRANSITION SECTION) (37.5' IN LENGTH (TYPICAL)

CET – TYPE A CRASHWORTHY END TERMINAL– MASH

MGS EA – MIDWEST GUARDRAIL SYSTEM (END ANCHOR)

SCALE

0 100 200 300 400 500

STATE OF MISSOURI
SHIRLEY J. NORRIS
NUMBER PE-28779
PROFESSIONAL ENGINEER

THIS SHEET HAS BEEN SIGNED, SEALED AND DATED ELECTRONICALLY.

DATE PREPARED	
9/29/2016	
ROUTE	STATE
I-55	MO
DISTRICT	SHEET NO.
SL	13
COUNTY	
JEFFERSON	
JOB NO.	
J6I3110	
CONTRACT ID.	
PROJECT NO.	
BRIDGE NO.	

DATE	DESCRIPTION

IF A SEAL IS PRESENT ON THIS SHEET IT HAS BEEN ELECTRONICALLY SEALED AND DATED.

MISSOURI HIGHWAYS AND TRANSPORTATION COMMISSION

105 WEST CAPITOL
JEFFERSON CITY, MO 65102
1-888-ASK-MODOT (1-888-275-6636)

PLAN SHEET
SHEET 10 OF 33

GUARDRAIL LEGEND:

MGS GR - MIDWEST GUARDRAIL SYSTEM (GUARDRAIL - STANDARD SPACING)

MGS BATS - MIDWEST GUARDRAIL SYSTEM (BRIDGE APPROACH TRANSITION SECTION) (37.5' IN LENGTH (TYPICAL)

CET - TYPE A CRASHWORTHY END TERMINAL- MASH

MGS EA - MIDWEST GUARDRAIL SYSTEM (END ANCHOR)

DISCLAIMER

THE PROFESSIONAL WHOSE SIGNATURE AND PERSONAL SEAL APPEAR HEREON ASSUMES RESPONSIBILITY ONLY FOR WHAT APPEARS ON THIS PAGE, AND DISCLAIMS (PURSUANT TO SECTION 327.411 RSMO) SPECIFICATION, ESTIMATES, REPORTS, OR OTHER DOCUMENTS OR INSTRUMENTS NOT SEALED BY THE UNDERSIGNED PROFESSIONAL RELATING TO OR INTENDED TO BE USED FOR ANY PART OR PARTS OF THE PROJECT TO WHICH THIS PAGE REFERS.

SCALE

0 100 200 300 400 500

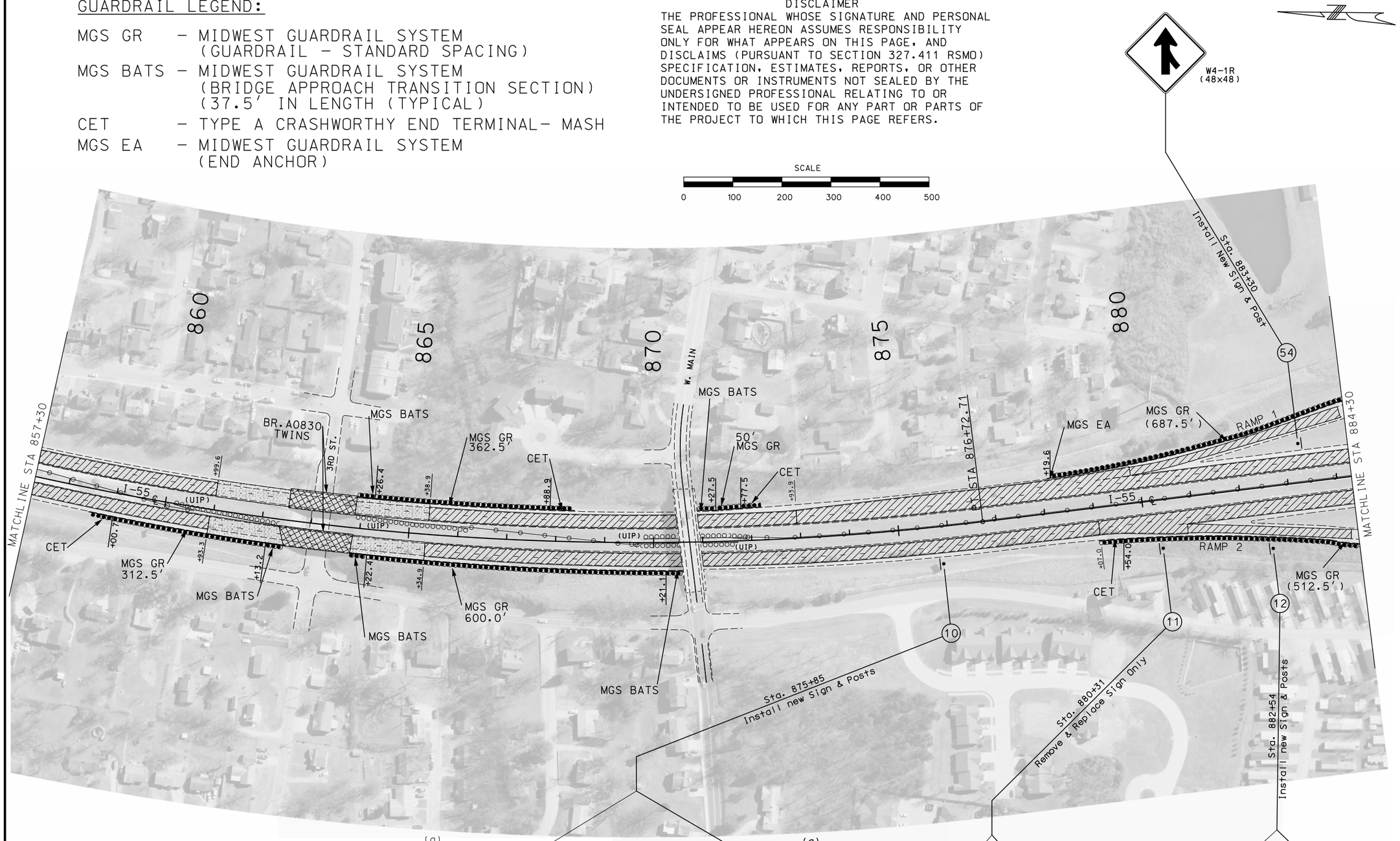

STATE OF MISSOURI
SHIRLEY J. NORRIS
NUMBER PE-28779
PROFESSIONAL ENGINEER

THIS SHEET HAS BEEN SIGNED, SEALED AND DATED ELECTRONICALLY.

DATE PREPARED	9/29/2016
ROUTE	I-55
STATE	MO
DISTRICT	SL
SHEET NO.	14
COUNTY	JEFFERSON
JOB NO.	J6I3110
CONTRACT ID.	
PROJECT NO.	
BRIDGE NO.	

DESCRIPTION

DATE

IF A SEAL IS PRESENT ON THIS SHEET IT HAS BEEN ELECTRONICALLY SEALED AND DATED.

MISSOURI HIGHWAYS AND TRANSPORTATION COMMISSION

105 WEST CAPITOL
JEFFERSON CITY, MO 65102
1-888-ASK-MODOT (1-888-275-6636)

PLAN SHEET
SHEET 11 OF 33

DISCLAIMER
THE PROFESSIONAL WHOSE SIGNATURE AND PERSONAL SEAL APPEAR HEREON ASSUMES RESPONSIBILITY ONLY FOR WHAT APPEARS ON THIS PAGE, AND DISCLAIMS (PURSUANT TO SECTION 327.411 RSMO) SPECIFICATION, ESTIMATES, REPORTS, OR OTHER DOCUMENTS OR INSTRUMENTS NOT SEALED BY THE UNDERSIGNED PROFESSIONAL RELATING TO OR INTENDED TO BE USED FOR ANY PART OR PARTS OF THE PROJECT TO WHICH THIS PAGE REFERS.

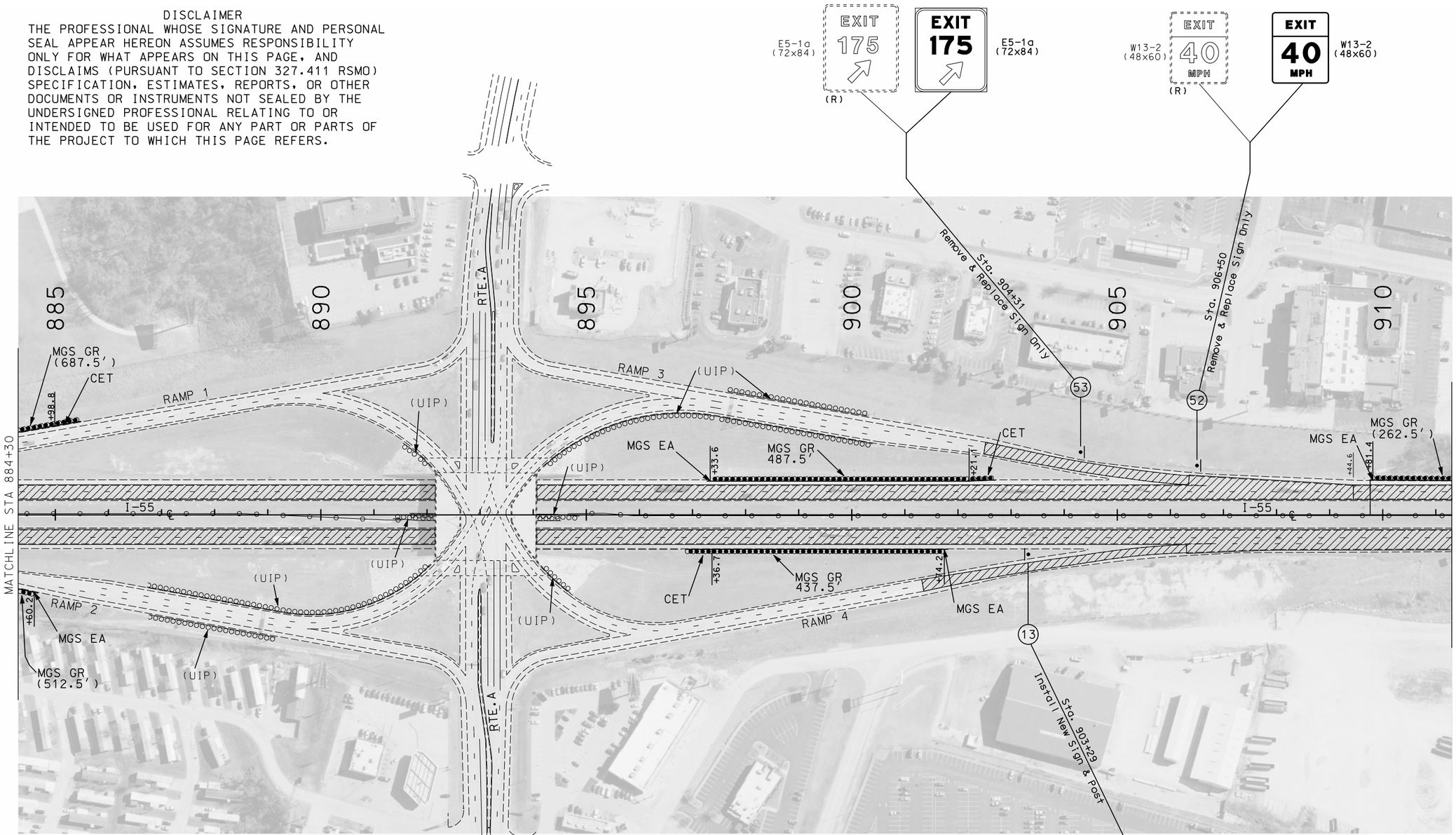

MODIFIED COLDMILL & RESURFACING

COLDMILL & RESURFACING

EXCEPTION (PROJ. J6I3131)

GUARDRAIL LEGEND:

MGS GR – MIDWEST GUARDRAIL SYSTEM (GUARDRAIL – STANDARD SPACING)

MGS BATS – MIDWEST GUARDRAIL SYSTEM (BRIDGE APPROACH TRANSITION SECTION) (37.5' IN LENGTH (TYPICAL)

CET – TYPE A CRASHWORTHY END TERMINAL– MASH

MGS EA – MIDWEST GUARDRAIL SYSTEM (END ANCHOR)

STATE OF MISSOURI
SHIRLEY J. NORRIS
NUMBER PE-28779
PROFESSIONAL ENGINEER

THIS SHEET HAS BEEN SIGNED, SEALED AND DATED ELECTRONICALLY.

DATE PREPARED	9/29/2016
ROUTE	I-55
STATE	MO
DISTRICT	SL
SHEET NO.	15
COUNTY	JEFFERSON
JOB NO.	J6I3110
CONTRACT ID.	
PROJECT NO.	
BRIDGE NO.	

DESCRIPTION

DATE

MISSOURI HIGHWAYS AND TRANSPORTATION COMMISSION

105 WEST CAPITOL
JEFFERSON CITY, MO 65102
1-888-ASK-MODOT (1-888-275-6636)

PLAN SHEET
SHEET 12 OF 33

IF A SEAL IS PRESENT ON THIS SHEET IT HAS BEEN ELECTRONICALLY SEALED AND DATED.

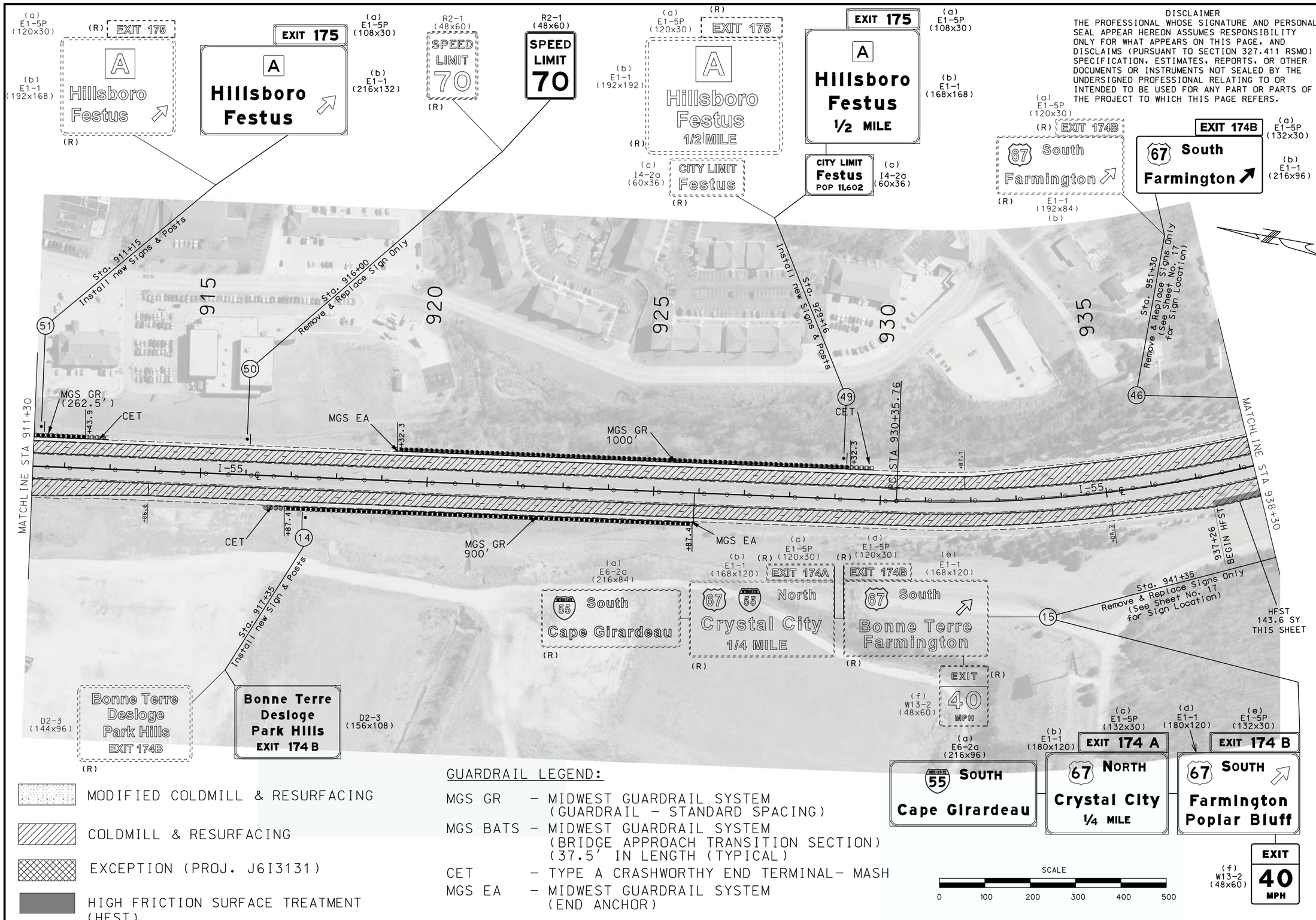

MODIFIED COLDMILL & RESURFACING

COLDMILL & RESURFACING

EXCEPTION (PROJ. J6I3131)

HIGH FRICTION SURFACE TREATMENT (HFST)

GUARDRAIL LEGEND:

MGS GR – MIDWEST GUARDRAIL SYSTEM (GUARDRAIL – STANDARD SPACING)

MGS BATS – MIDWEST GUARDRAIL SYSTEM (BRIDGE APPROACH TRANSITION SECTION) (37.5' IN LENGTH (TYPICAL)

CET – TYPE A CRASHWORTHY END TERMINAL– MASH

MGS EA – MIDWEST GUARDRAIL SYSTEM (END ANCHOR)

DISCLAIMER

THE PROFESSIONAL WHOSE SIGNATURE AND PERSONAL SEAL APPEAR HEREON ASSUMES RESPONSIBILITY ONLY FOR WHAT APPEARS ON THIS PAGE, AND DISCLAIMS (PURSUANT TO SECTION 327.411 RSMO) SPECIFICATION, ESTIMATES, REPORTS, OR OTHER DOCUMENTS OR INSTRUMENTS NOT SEALED BY THE UNDERSIGNED PROFESSIONAL RELATING TO OR INTENDED TO BE USED FOR ANY PART OR PARTS OF THE PROJECT TO WHICH THIS PAGE REFERS.

STATE OF MISSOURI
SHIRLEY J. NORRIS
NUMBER PE-28779
PROFESSIONAL ENGINEER

THIS SHEET HAS BEEN SIGNED, SEALED AND DATED ELECTRONICALLY.

DATE PREPARED	9/29/2016
ROUTE	I-55
STATE	MO
DISTRICT	SL
SHEET NO.	16
COUNTY	JEFFERSON
JOB NO.	J6I3110
CONTRACT ID.	
PROJECT NO.	
BRIDGE NO.	

DATE	DESCRIPTION

MISSOURI HIGHWAYS AND TRANSPORTATION COMMISSION

105 WEST CAPITOL
JEFFERSON CITY, MO 65102
1-888-ASK-MODOT (1-888-275-6636)

PLAN SHEET
SHEET 13 OF 33

IF A SEAL IS PRESENT ON THIS SHEET IT HAS BEEN ELECTRONICALLY SEALED AND DATED.

DISCLAIMER
THE PROFESSIONAL WHOSE SIGNATURE AND PERSONAL SEAL APPEAR HEREON ASSUMES RESPONSIBILITY ONLY FOR WHAT APPEARS ON THIS PAGE, AND DISCLAIMS (PURSUANT TO SECTION 327.411 RSMO) SPECIFICATION, ESTIMATES, REPORTS, OR OTHER DOCUMENTS OR INSTRUMENTS NOT SEALED BY THE UNDERSIGNED PROFESSIONAL RELATING TO OR INTENDED TO BE USED FOR ANY PART OR PARTS OF THE PROJECT TO WHICH THIS PAGE REFERS.

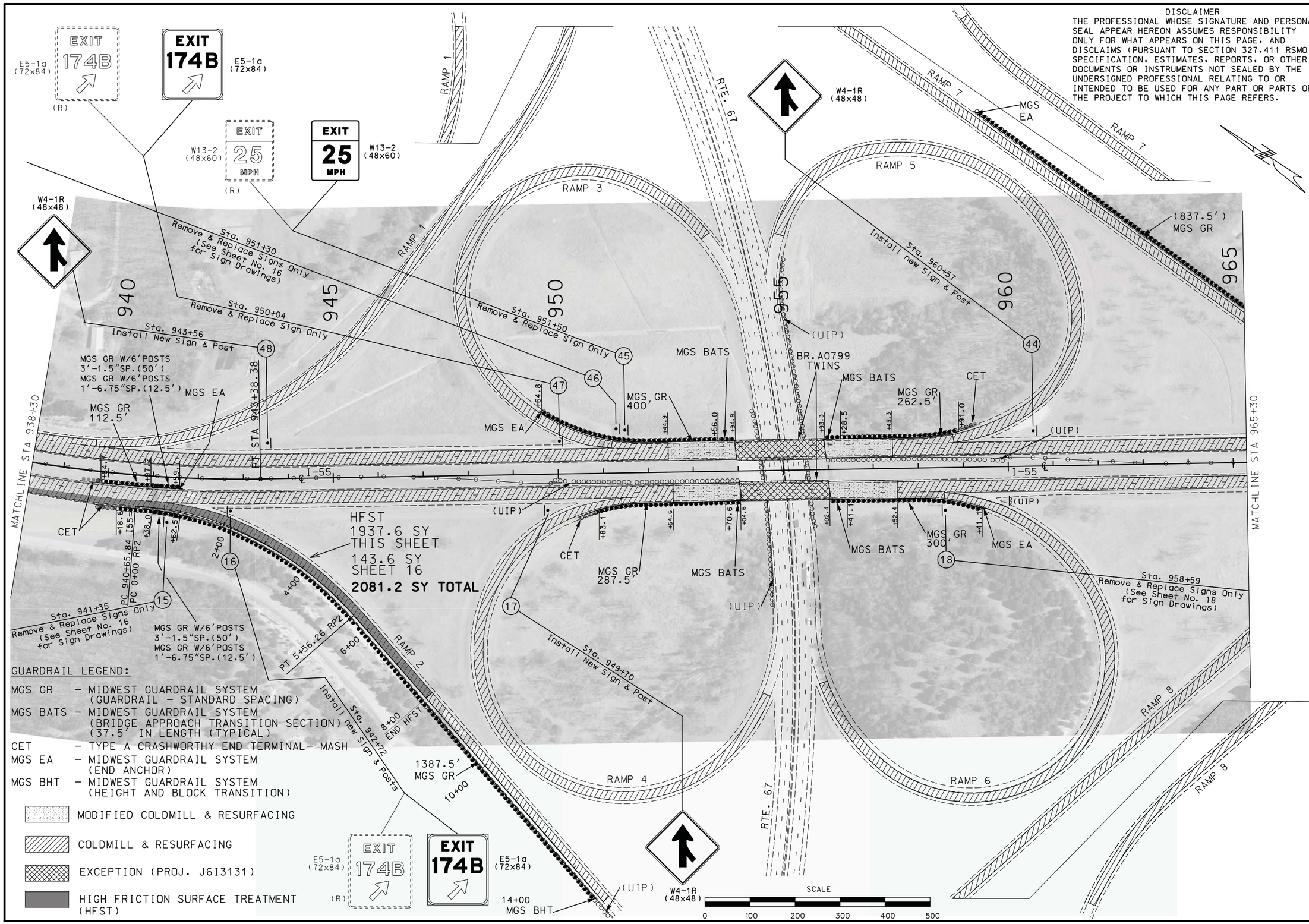

GUARDRAIL LEGEND:

MGS GR – MIDWEST GUARDRAIL SYSTEM (GUARDRAIL – STANDARD SPACING)

MGS BATS – MIDWEST GUARDRAIL SYSTEM (BRIDGE APPROACH TRANSITION SECTION) (37.5' IN LENGTH (TYPICAL)

CET – TYPE A CRASHWORTHY END TERMINAL– MASH

MGS EA – MIDWEST GUARDRAIL SYSTEM (END ANCHOR)

MGS BHT – MIDWEST GUARDRAIL SYSTEM (HEIGHT AND BLOCK TRANSITION)

MODIFIED COLDMILL & RESURFACING

COLDMILL & RESURFACING

EXCEPTION (PROJ. J6I3131)

HIGH FRICTION SURFACE TREATMENT (HFST)

STATE OF MISSOURI
SHIRLEY J. NORRIS
NUMBER PE-28779
PROFESSIONAL ENGINEER

THIS SHEET HAS BEEN SIGNED, SEALED AND DATED ELECTRONICALLY.

DATE PREPARED	
10/20/2016	
ROUTE	STATE
I-55	MO
DISTRICT	SHEET NO.
SL	17
COUNTY	
JEFFERSON	
JOB NO.	
J6I3110	
CONTRACT ID.	
PROJECT NO.	
BRIDGE NO.	

DATE	DESCRIPTION

IF A SEAL IS PRESENT ON THIS SHEET IT HAS BEEN ELECTRONICALLY SEALED AND DATED.

MISSOURI HIGHWAYS AND TRANSPORTATION COMMISSION
105 WEST CAPITOL
JEFFERSON CITY, MO 65102
1-888-ASK-MODOT (1-888-275-6636)

PLAN SHEET
SHEET 14 OF 33

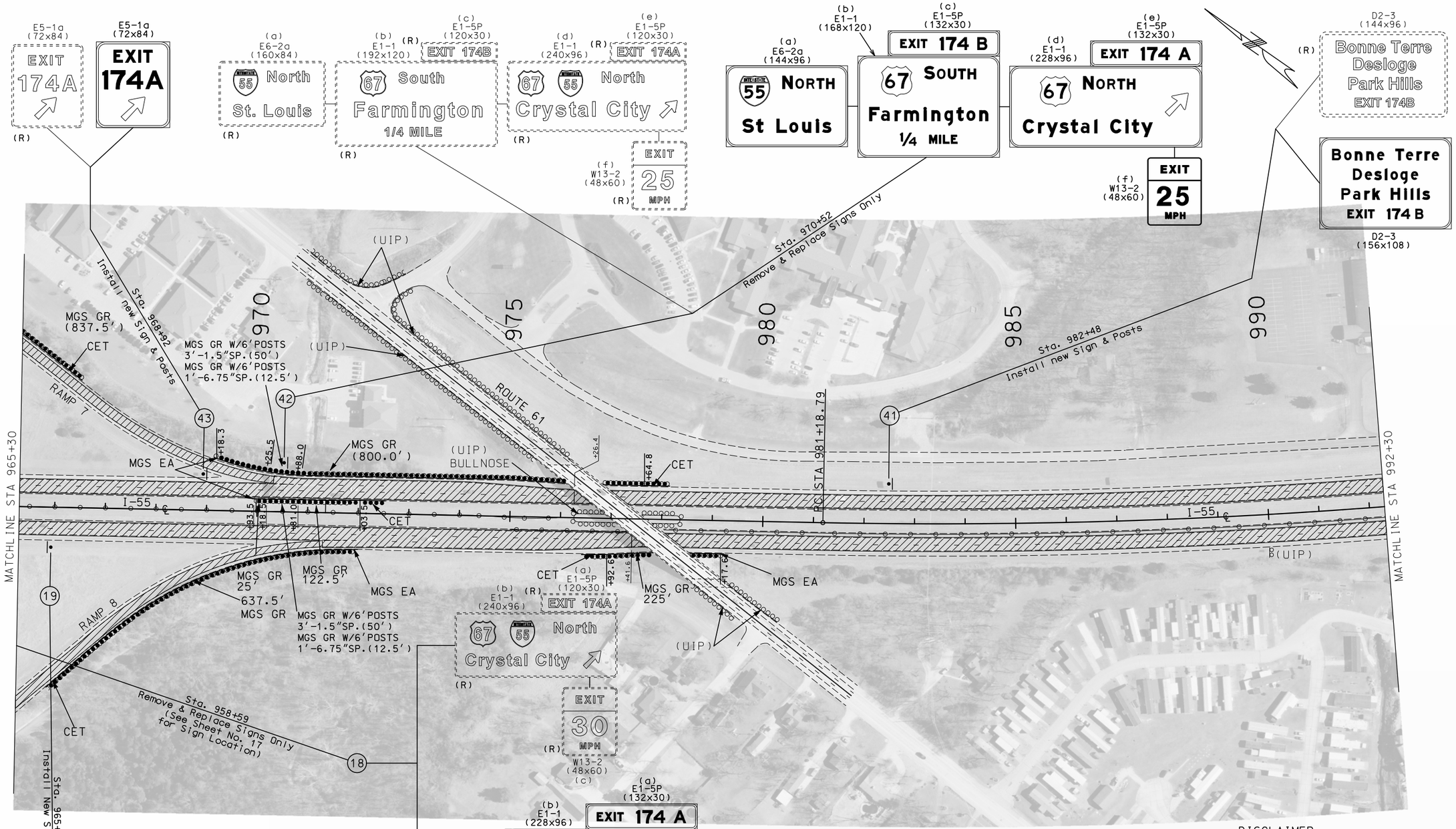

GUARDRAIL LEGEND:

MGS GR - MIDWEST GUARDRAIL SYSTEM (GUARDRAIL - STANDARD SPACING)

MGS BATS - MIDWEST GUARDRAIL SYSTEM (BRIDGE APPROACH TRANSITION SECTION) (37.5' IN LENGTH (TYPICAL)

CET - TYPE A CRASHWORTHY END TERMINAL- MASH

MGS EA - MIDWEST GUARDRAIL SYSTEM (END ANCHOR)

MODIFIED COLDMILL & RESURFACING

COLDMILL & RESURFACING

EXCEPTION (PROJ. J6I3131)

DISCLAIMER

THE PROFESSIONAL WHOSE SIGNATURE AND PERSONAL SEAL APPEAR HEREON ASSUMES RESPONSIBILITY ONLY FOR WHAT APPEARS ON THIS PAGE, AND DISCLAIMS (PURSUANT TO SECTION 327.411 RSMO) SPECIFICATION, ESTIMATES, REPORTS, OR OTHER DOCUMENTS OR INSTRUMENTS NOT SEALED BY THE UNDERSIGNED PROFESSIONAL RELATING TO OR INTENDED TO BE USED FOR ANY PART OR PARTS OF THE PROJECT TO WHICH THIS PAGE REFERS.

SCALE

0 100 200 300 400 500

STATE OF MISSOURI
SHIRLEY J. NORRIS
NUMBER PE-28779
PROFESSIONAL ENGINEER

THIS SHEET HAS BEEN SIGNED, SEALED AND DATED ELECTRONICALLY.

DATE PREPARED	10/20/2016
ROUTE	I-55
STATE	MO
DISTRICT	SL
SHEET NO.	18
COUNTY	JEFFERSON
JOB NO.	J6I3110
CONTRACT ID.	
PROJECT NO.	
BRIDGE NO.	

DESCRIPTION

DATE

MISSOURI HIGHWAYS AND TRANSPORTATION COMMISSION

105 WEST CAPITOL
JEFFERSON CITY, MO 65102
1-888-ASK-MODOT (1-888-275-6636)

PLAN SHEET
SHEET 15 OF 33

IF A SEAL IS PRESENT ON THIS SHEET IT HAS BEEN ELECTRONICALLY SEALED AND DATED.

GUARDRAIL LEGEND:

MGS GR - MIDWEST GUARDRAIL SYSTEM (GUARDRAIL - STANDARD SPACING)

MGS BATS - MIDWEST GUARDRAIL SYSTEM (BRIDGE APPROACH TRANSITION SECTION) (37.5' IN LENGTH (TYPICAL)

CET - TYPE A CRASHWORTHY END TERMINAL- MASH

MGS EA - MIDWEST GUARDRAIL SYSTEM (END ANCHOR)

DISCLAIMER

THE PROFESSIONAL WHOSE SIGNATURE AND PERSONAL SEAL APPEAR HEREON ASSUMES RESPONSIBILITY ONLY FOR WHAT APPEARS ON THIS PAGE, AND DISCLAIMS (PURSUANT TO SECTION 327.411 RSMO) SPECIFICATION, ESTIMATES, REPORTS, OR OTHER DOCUMENTS OR INSTRUMENTS NOT SEALED BY THE UNDERSIGNED PROFESSIONAL RELATING TO OR INTENDED TO BE USED FOR ANY PART OR PARTS OF THE PROJECT TO WHICH THIS PAGE REFERS.

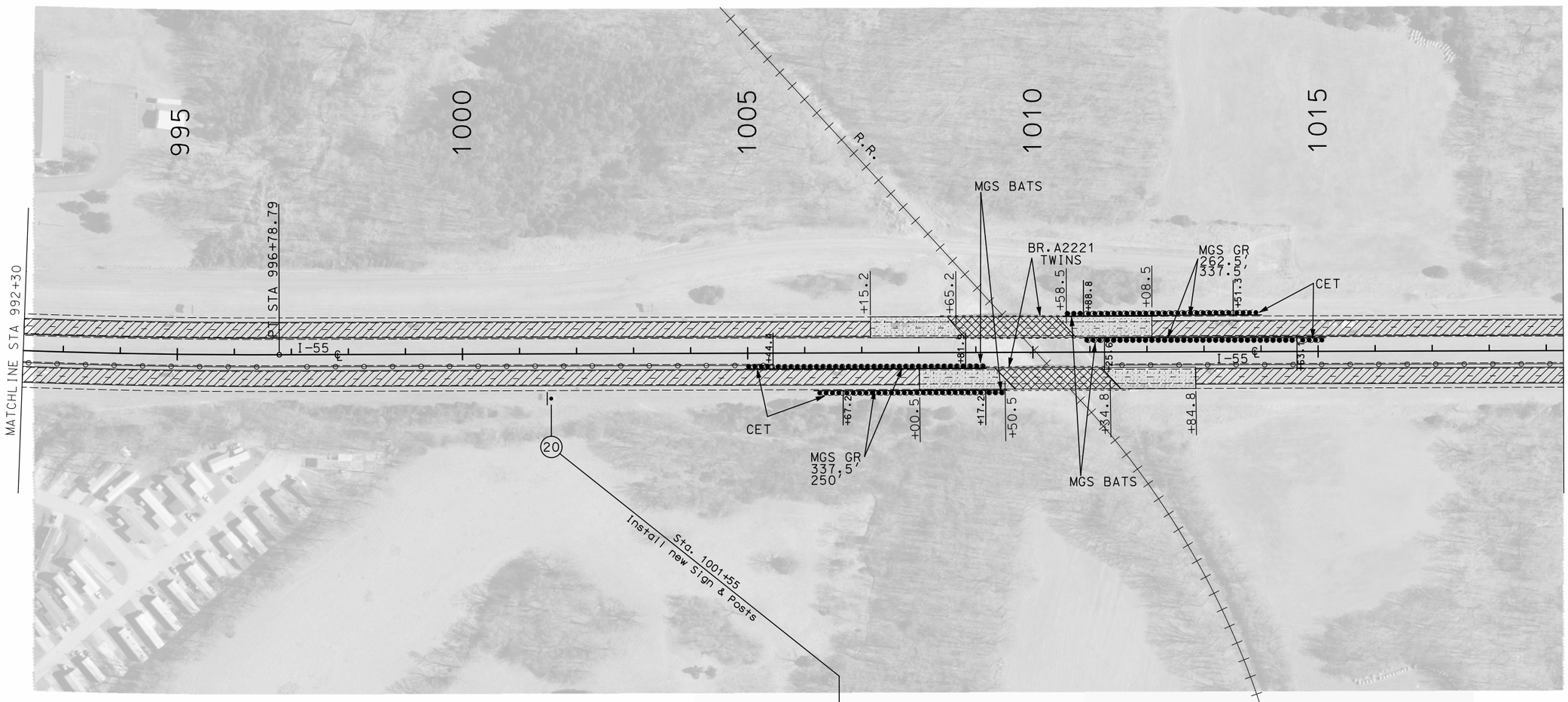

MODIFIED COLDMILL & RESURFACING

COLDMILL & RESURFACING

EXCEPTION (PROJ. J6I3131)

SCALE

0 100 200 300 400 500

STATE OF MISSOURI
SHIRLEY J. NORRIS
NUMBER PE-28779
PROFESSIONAL ENGINEER

THIS SHEET HAS BEEN SIGNED, SEALED AND DATED ELECTRONICALLY.

DATE PREPARED	9/29/2016
ROUTE	I-55
STATE	MO
DISTRICT	SL
SHEET NO.	19
COUNTY	JEFFERSON
JOB NO.	J6I3110
CONTRACT ID.	
PROJECT NO.	
BRIDGE NO.	

DATE	DESCRIPTION

IF A SEAL IS PRESENT ON THIS SHEET IT HAS BEEN ELECTRONICALLY SEALED AND DATED.

MISSOURI HIGHWAYS AND TRANSPORTATION COMMISSION

105 WEST CAPITOL
JEFFERSON CITY, MO 65102
1-888-ASK-MODOT (1-888-275-6636)

PLAN SHEET
SHEET 16 OF 33

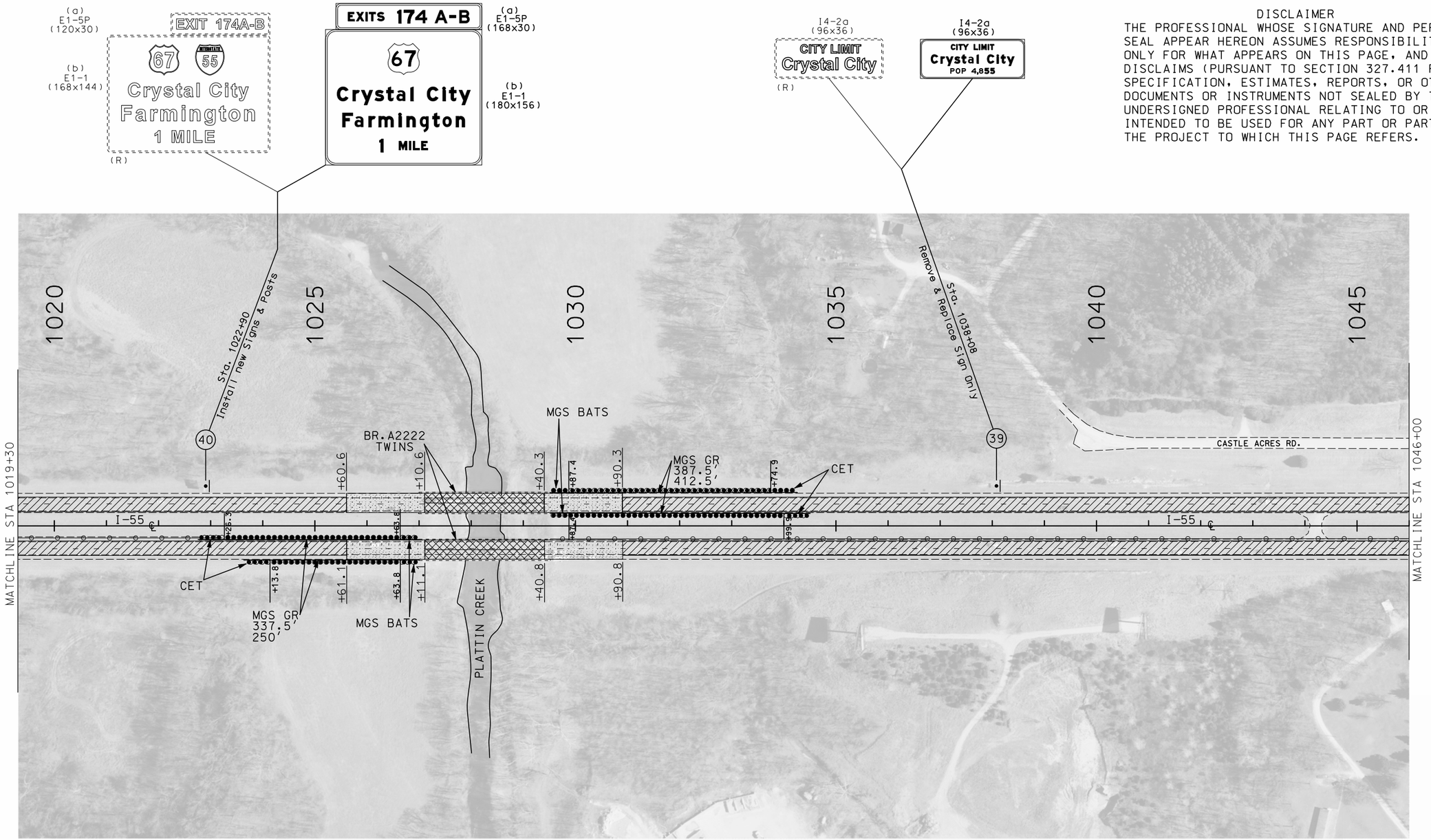

DISCLAIMER
THE PROFESSIONAL WHOSE SIGNATURE AND PERSONAL SEAL APPEAR HEREON ASSUMES RESPONSIBILITY ONLY FOR WHAT APPEARS ON THIS PAGE, AND DISCLAIMS (PURSUANT TO SECTION 327.411 RSMO) SPECIFICATION, ESTIMATES, REPORTS, OR OTHER DOCUMENTS OR INSTRUMENTS NOT SEALED BY THE UNDERSIGNED PROFESSIONAL RELATING TO OR INTENDED TO BE USED FOR ANY PART OR PARTS OF THE PROJECT TO WHICH THIS PAGE REFERS.

MODIFIED COLDMILL & RESURFACING

COLDMILL & RESURFACING

EXCEPTION (PROJ. J6I3131)

GUARDRAIL LEGEND:

MGS GR - MIDWEST GUARDRAIL SYSTEM (GUARDRAIL - STANDARD SPACING)

MGS BATS - MIDWEST GUARDRAIL SYSTEM (BRIDGE APPROACH TRANSITION SECTION) (37.5' IN LENGTH (TYPICAL)

CET - TYPE A CRASHWORTHY END TERMINAL- MASH

MGS EA - MIDWEST GUARDRAIL SYSTEM (END ANCHOR)

SCALE
0 100 200 300 400 500

STATE OF MISSOURI
SHIRLEY J. NORRIS
NUMBER PE-28779
PROFESSIONAL ENGINEER
THIS SHEET HAS BEEN SIGNED, SEALED AND DATED ELECTRONICALLY.

DATE PREPARED	9/29/2016
ROUTE	I-55
STATE	MO
DISTRICT	SL
SHEET NO.	20
COUNTY	JEFFERSON
JOB NO.	J6I3110
CONTRACT ID.	
PROJECT NO.	
BRIDGE NO.	

DESCRIPTION

DATE

MISSOURI HIGHWAYS AND TRANSPORTATION COMMISSION
105 WEST CAPITOL
JEFFERSON CITY, MO 65102
1-888-ASK-MODOT (1-888-275-6636)

PLAN SHEET
SHEET 17 OF 33

IF A SEAL IS PRESENT ON THIS SHEET IT HAS BEEN ELECTRONICALLY SEALED AND DATED.

DISCLAIMER
THE PROFESSIONAL WHOSE SIGNATURE AND PERSONAL SEAL APPEAR HEREON ASSUMES RESPONSIBILITY ONLY FOR WHAT APPEARS ON THIS PAGE, AND DISCLAIMS (PURSUANT TO SECTION 327.411 RSMO) SPECIFICATION, ESTIMATES, REPORTS, OR OTHER DOCUMENTS OR INSTRUMENTS NOT SEALED BY THE UNDERSIGNED PROFESSIONAL RELATING TO OR INTENDED TO BE USED FOR ANY PART OR PARTS OF THE PROJECT TO WHICH THIS PAGE REFERS.

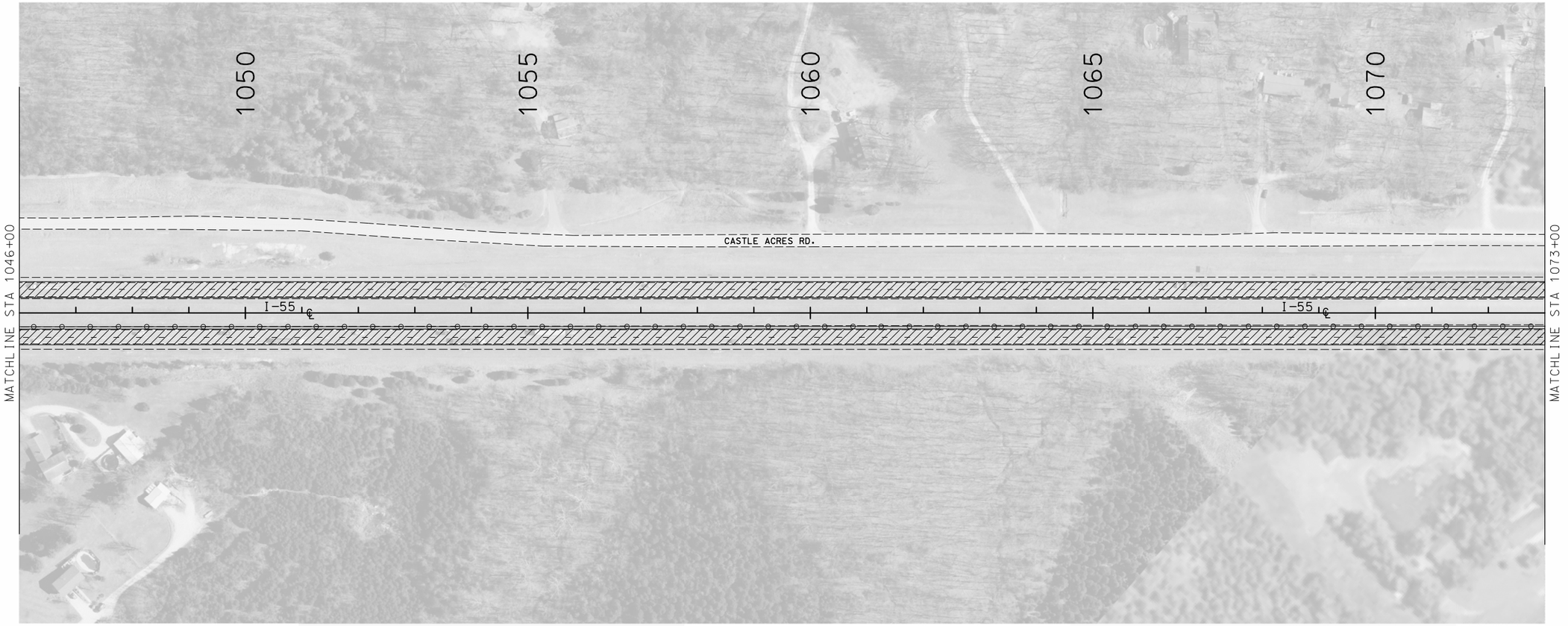

COLDMILL & RESURFACING

EXCEPTION (PROJ. J6I3131)

SCALE
0 100 200 300 400 500

STATE OF MISSOURI
SHIRLEY J. NORRIS
NUMBER PE-28779
PROFESSIONAL ENGINEER
THIS SHEET HAS BEEN SIGNED, SEALED AND DATED ELECTRONICALLY.

DATE PREPARED	9/29/2016
ROUTE	I-55
STATE	MO
DISTRICT	SL
SHEET NO.	21
COUNTY	JEFFERSON
JOB NO.	J6I3110
CONTRACT ID.	
PROJECT NO.	
BRIDGE NO.	

DATE	DESCRIPTION

IF A SEAL IS PRESENT ON THIS SHEET IT HAS BEEN ELECTRONICALLY SEALED AND DATED.

MISSOURI HIGHWAYS AND TRANSPORTATION COMMISSION
105 WEST CAPITOL
JEFFERSON CITY, MO 65102
1-888-ASK-MODOT (1-888-275-6636)

PLAN SHEET
SHEET 18 OF 33

DISCLAIMER
THE PROFESSIONAL WHOSE SIGNATURE AND PERSONAL SEAL APPEAR HEREON ASSUMES RESPONSIBILITY ONLY FOR WHAT APPEARS ON THIS PAGE, AND DISCLAIMS (PURSUANT TO SECTION 327.411 RSMO) SPECIFICATION, ESTIMATES, REPORTS, OR OTHER DOCUMENTS OR INSTRUMENTS NOT SEALED BY THE UNDERSIGNED PROFESSIONAL RELATING TO OR INTENDED TO BE USED FOR ANY PART OR PARTS OF THE PROJECT TO WHICH THIS PAGE REFERS.

SCALE
0 100 200 300 400 500

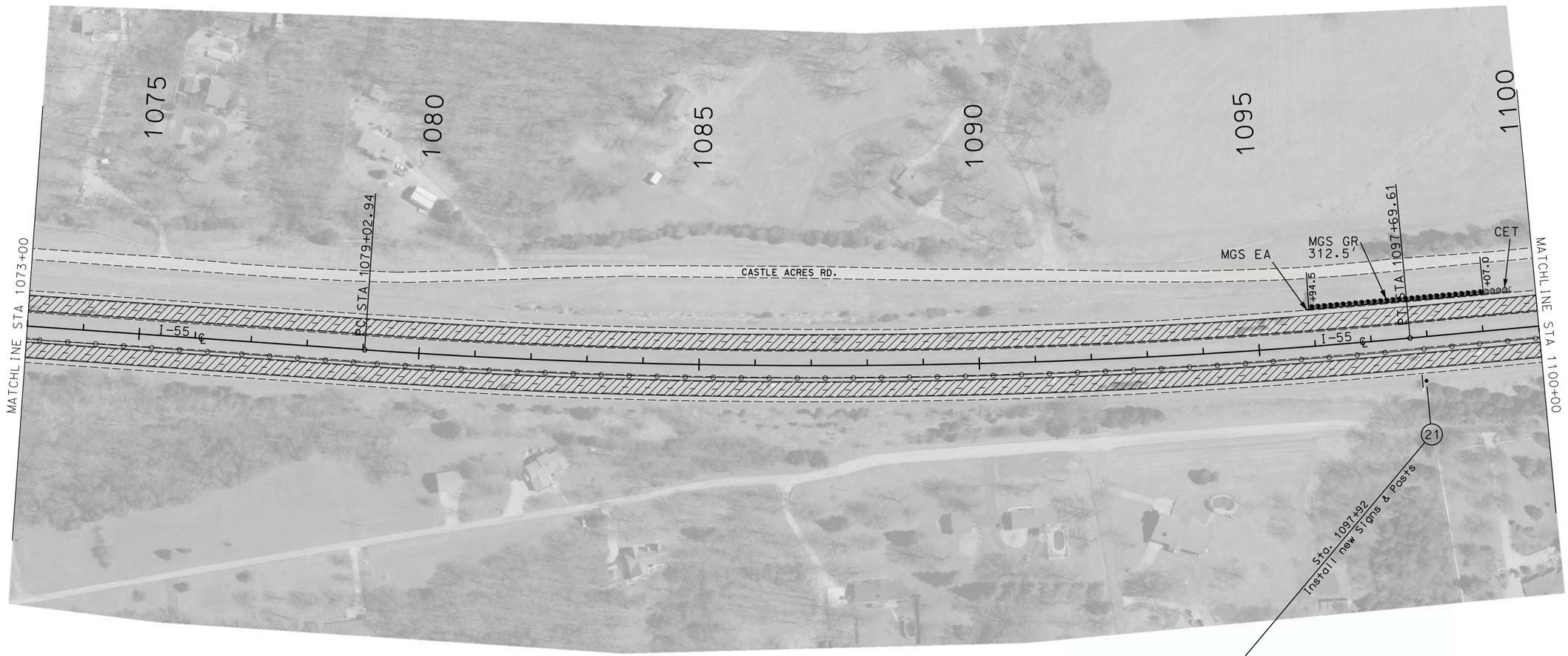

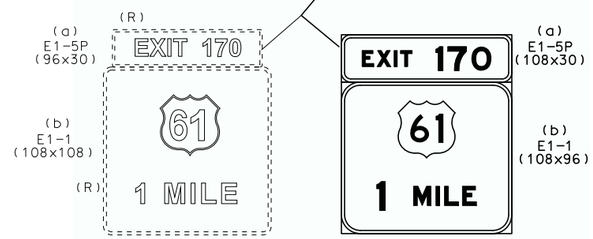

COLDMILL & RESURFACING

EXCEPTION (PROJ. J6I3131)

GUARDRAIL LEGEND:

MGS GR - MIDWEST GUARDRAIL SYSTEM (GUARDRAIL - STANDARD SPACING)

MGS BATS - MIDWEST GUARDRAIL SYSTEM (BRIDGE APPROACH TRANSITION SECTION) (37.5' IN LENGTH (TYPICAL)

CET - TYPE A CRASHWORTHY END TERMINAL- MASH

MGS EA - MIDWEST GUARDRAIL SYSTEM (END ANCHOR)

STATE OF MISSOURI
SHIRLEY J. NORRIS
NUMBER PE-28779
PROFESSIONAL ENGINEER
THIS SHEET HAS BEEN SIGNED, SEALED AND DATED ELECTRONICALLY.

DATE PREPARED	
9/29/2016	
ROUTE	STATE
I-55	MO
DISTRICT	SHEET NO.
SL	22
COUNTY	
JEFFERSON	
JOB NO.	
J6I3110	
CONTRACT ID.	
PROJECT NO.	
BRIDGE NO.	

DATE	DESCRIPTION

IF A SEAL IS PRESENT ON THIS SHEET IT HAS BEEN ELECTRONICALLY SEALED AND DATED.

MISSOURI HIGHWAYS AND TRANSPORTATION COMMISSION
105 WEST CAPITOL
JEFFERSON CITY, MO 65102
1-888-ASK-MODOT (1-888-275-6636)

PLAN SHEET
SHEET 19 OF 33

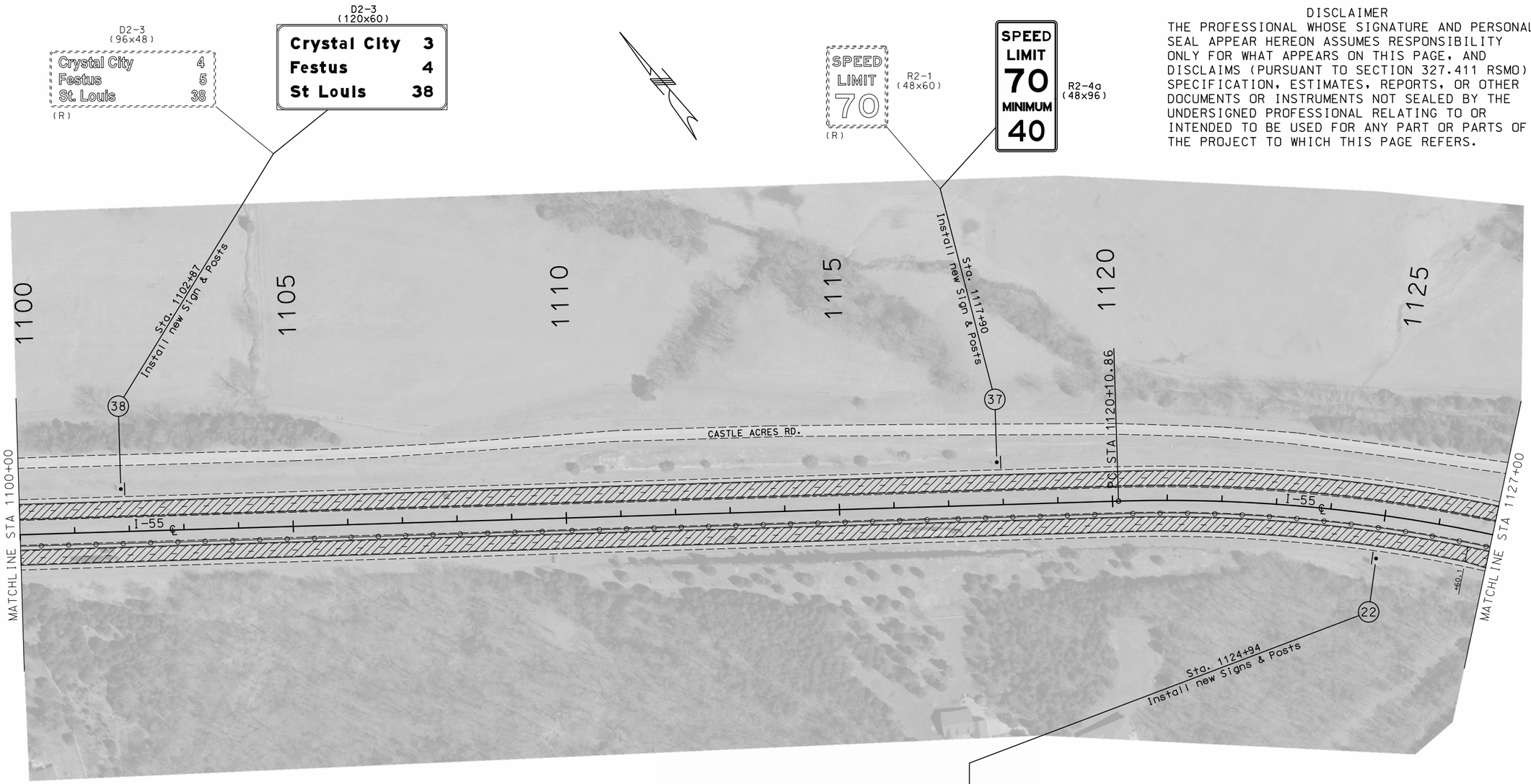

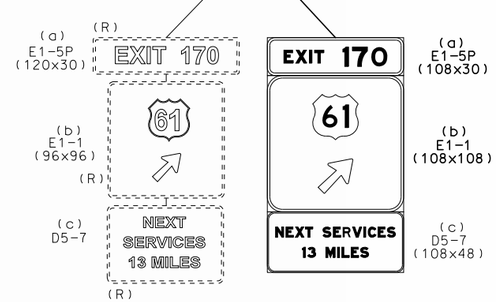

COLDMILL & RESURFACING

EXCEPTION (PROJ. J6I3131)

SCALE

0 100 200 300 400 500

DISCLAIMER

THE PROFESSIONAL WHOSE SIGNATURE AND PERSONAL SEAL APPEAR HEREON ASSUMES RESPONSIBILITY ONLY FOR WHAT APPEARS ON THIS PAGE, AND DISCLAIMS (PURSUANT TO SECTION 327.411 RSMO) SPECIFICATION, ESTIMATES, REPORTS, OR OTHER DOCUMENTS OR INSTRUMENTS NOT SEALED BY THE UNDERSIGNED PROFESSIONAL RELATING TO OR INTENDED TO BE USED FOR ANY PART OR PARTS OF THE PROJECT TO WHICH THIS PAGE REFERS.

STATE OF MISSOURI
SHIRLEY J. NORRIS
NUMBER PE-28779
PROFESSIONAL ENGINEER

THIS SHEET HAS BEEN SIGNED, SEALED AND DATED ELECTRONICALLY.

DATE PREPARED	9/29/2016
ROUTE	I-55
STATE	MO
DISTRICT	SL
SHEET NO.	23
COUNTY	JEFFERSON
JOB NO.	J6I3110
CONTRACT ID.	
PROJECT NO.	
BRIDGE NO.	

DATE	DESCRIPTION

IF A SEAL IS PRESENT ON THIS SHEET IT HAS BEEN ELECTRONICALLY SEALED AND DATED.

MISSOURI HIGHWAYS AND TRANSPORTATION COMMISSION

105 WEST CAPITOL
JEFFERSON CITY, MO 65102
1-888-ASK-MODOT (1-888-275-6636)

PLAN SHEET
SHEET 20 OF 33

GUARDRAIL LEGEND:

MGS GR - MIDWEST GUARDRAIL SYSTEM (GUARDRAIL - STANDARD SPACING)

MGS BATS - MIDWEST GUARDRAIL SYSTEM (BRIDGE APPROACH TRANSITION SECTION) (37.5' IN LENGTH (TYPICAL)

CET - TYPE A CRASHWORTHY END TERMINAL- MASH

MGS EA - MIDWEST GUARDRAIL SYSTEM (END ANCHOR)

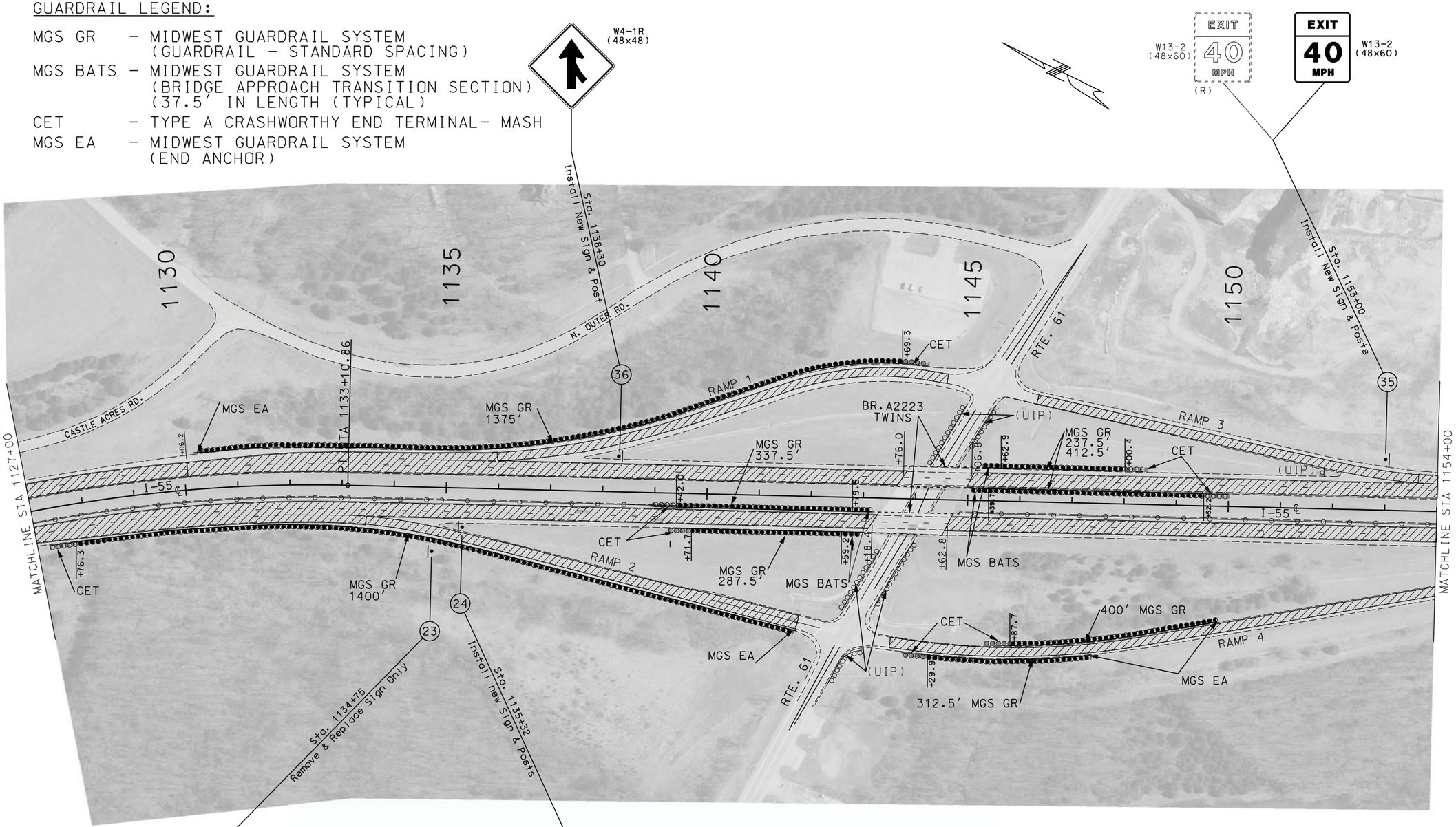

COLDMILL & RESURFACING

EXCEPTION (PROJ. J6I3131)

DISCLAIMER

THE PROFESSIONAL WHOSE SIGNATURE AND PERSONAL SEAL APPEAR HEREON ASSUMES RESPONSIBILITY ONLY FOR WHAT APPEARS ON THIS PAGE, AND DISCLAIMS (PURSUANT TO SECTION 327.411 RSMO) SPECIFICATION, ESTIMATES, REPORTS, OR OTHER DOCUMENTS OR INSTRUMENTS NOT SEALED BY THE UNDERSIGNED PROFESSIONAL RELATING TO OR INTENDED TO BE USED FOR ANY PART OR PARTS OF THE PROJECT TO WHICH THIS PAGE REFERS.

SCALE

0 100 200 300 400 500

STATE OF MISSOURI
SHIRLEY J. NORRIS
NUMBER PE-28779
PROFESSIONAL ENGINEER

THIS SHEET HAS BEEN SIGNED, SEALED AND DATED ELECTRONICALLY.

DATE PREPARED	9/29/2016
ROUTE	I-55
STATE	MO
DISTRICT	SL
SHEET NO.	24
COUNTY	JEFFERSON
JOB NO.	J6I3110
CONTRACT ID.	
PROJECT NO.	
BRIDGE NO.	

DATE	DESCRIPTION

IF A SEAL IS PRESENT ON THIS SHEET IT HAS BEEN ELECTRONICALLY SEALED AND DATED.

MISSOURI HIGHWAYS AND TRANSPORTATION COMMISSION

105 WEST CAPITOL
JEFFERSON CITY, MO 65102
1-888-ASK-MODOT (1-888-275-6636)

PLAN SHEET
SHEET 21 OF 33

DISCLAIMER
THE PROFESSIONAL WHOSE SIGNATURE AND PERSONAL SEAL APPEAR HEREON ASSUMES RESPONSIBILITY ONLY FOR WHAT APPEARS ON THIS PAGE, AND DISCLAIMS (PURSUANT TO SECTION 327.411 RSMO) SPECIFICATION, ESTIMATES, REPORTS, OR OTHER DOCUMENTS OR INSTRUMENTS NOT SEALED BY THE UNDERSIGNED PROFESSIONAL RELATING TO OR INTENDED TO BE USED FOR ANY PART OR PARTS OF THE PROJECT TO WHICH THIS PAGE REFERS.

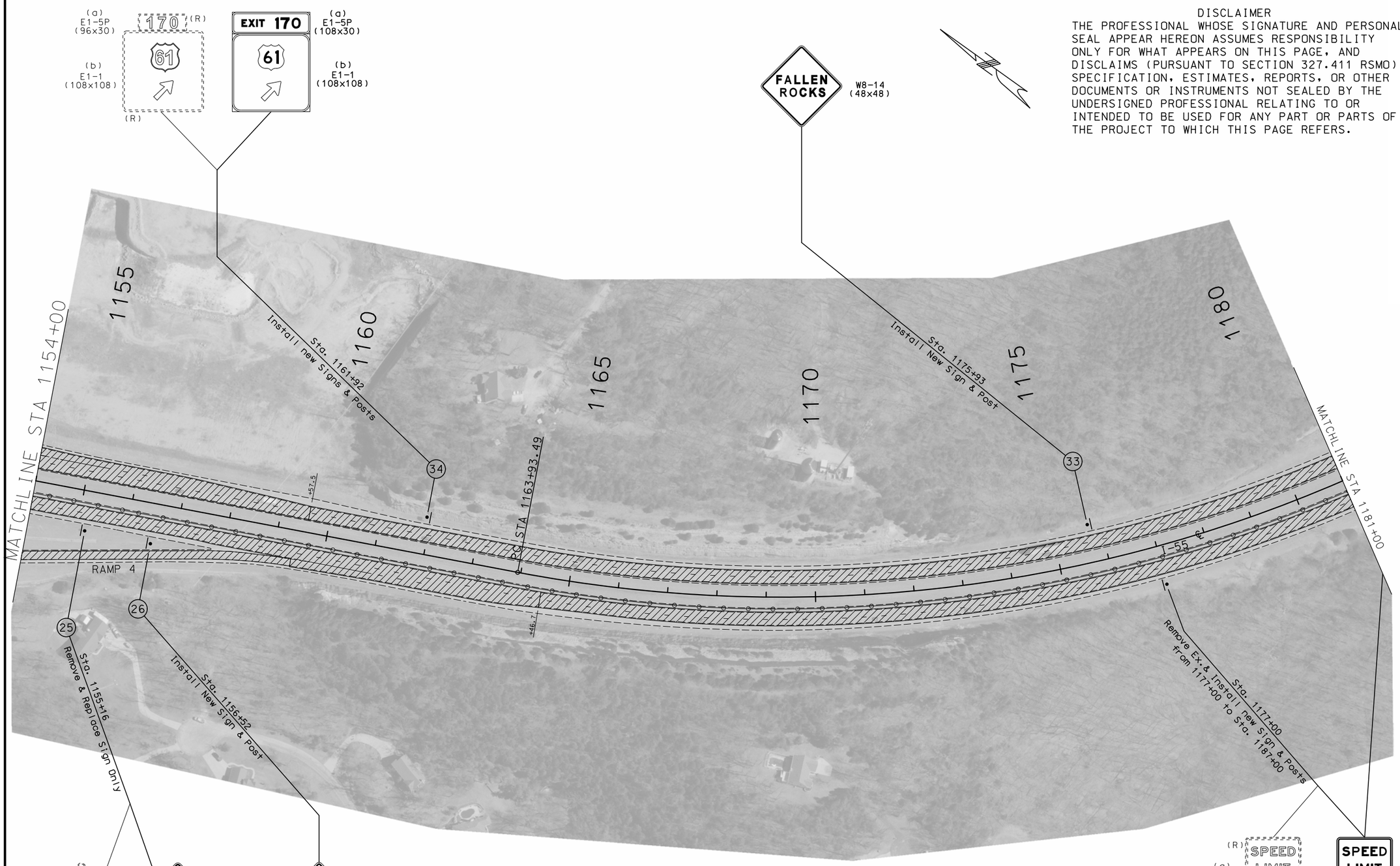

STATE OF MISSOURI
SHIRLEY J. NORRIS
NUMBER PE-28779
PROFESSIONAL ENGINEER

THIS SHEET HAS BEEN SIGNED, SEALED AND DATED ELECTRONICALLY.

DATE PREPARED	9/29/2016
ROUTE	I-55
STATE	MO
DISTRICT	SL
SHEET NO.	25
COUNTY	JEFFERSON
JOB NO.	J6I3110
CONTRACT ID.	
PROJECT NO.	
BRIDGE NO.	

DATE	DESCRIPTION

MISSOURI HIGHWAYS AND TRANSPORTATION COMMISSION
105 WEST CAPITOL
JEFFERSON CITY, MO 65102
1-888-ASK-MODOT (1-888-275-6636)

PLAN SHEET
SHEET 22 OF 33

IF A SEAL IS PRESENT ON THIS SHEET IT HAS BEEN ELECTRONICALLY SEALED AND DATED.

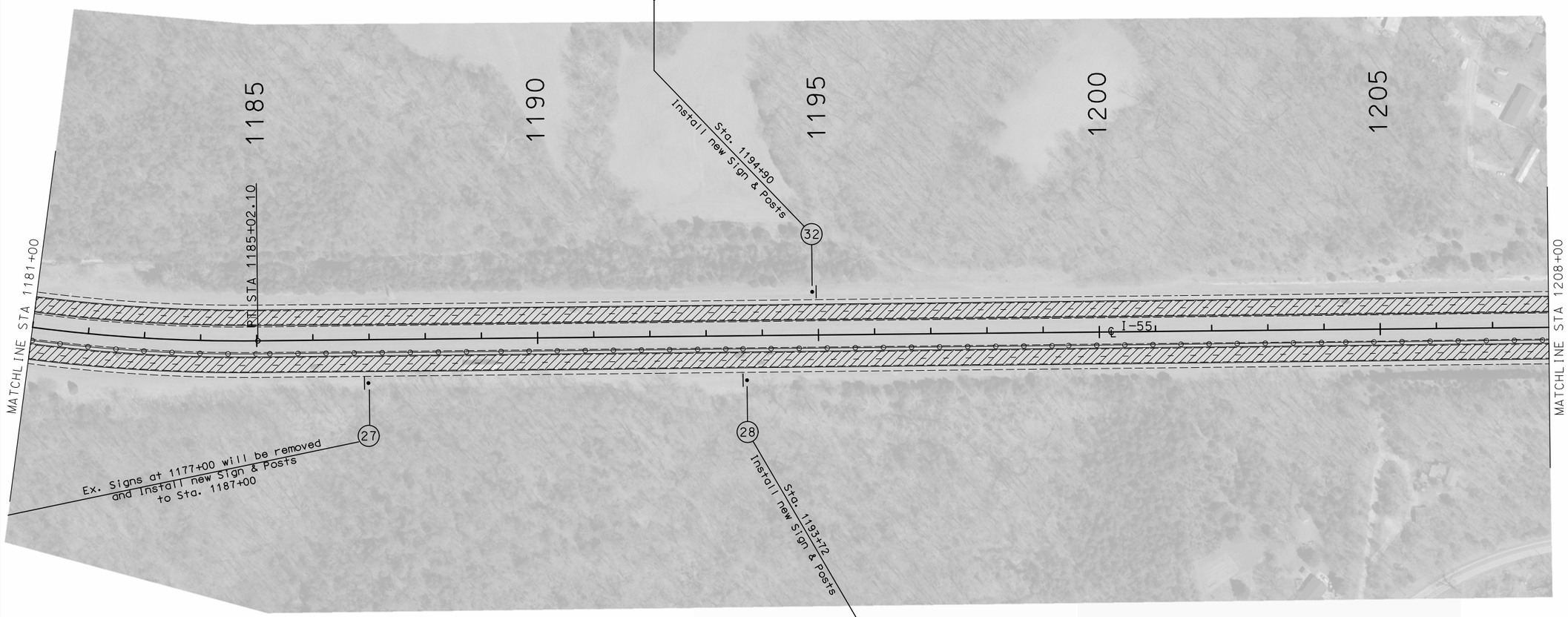

(a) E1-5P (120x30)
EXIT 170
(R)
(b) E1-1 (120x120)
61
1 MILE
(R)

(a) E1-5P (108x30)
EXIT 170
(b) E1-1 (108x96)
61
1 MILE

D2-3 (108x48)

Route OO-DD	8
Bloomsdale	13
Cape Girardeau	70

(R)

D2-3 (132x60)

OO DD	8
Bloomsdale	12
Cape Girardeau	70

COLDMILL & RESURFACING

EXCEPTION (PROJ. J6I3131)

SCALE

0 100 200 300 400 500

DISCLAIMER

THE PROFESSIONAL WHOSE SIGNATURE AND PERSONAL SEAL APPEAR HEREON ASSUMES RESPONSIBILITY ONLY FOR WHAT APPEARS ON THIS PAGE, AND DISCLAIMS (PURSUANT TO SECTION 327.411 RSMO) SPECIFICATION, ESTIMATES, REPORTS, OR OTHER DOCUMENTS OR INSTRUMENTS NOT SEALED BY THE UNDERSIGNED PROFESSIONAL RELATING TO OR INTENDED TO BE USED FOR ANY PART OR PARTS OF THE PROJECT TO WHICH THIS PAGE REFERS.

STATE OF MISSOURI
SHIRLEY J. NORRIS
NUMBER PE-28779
PROFESSIONAL ENGINEER

THIS SHEET HAS BEEN SIGNED, SEALED AND DATED ELECTRONICALLY.

DATE PREPARED	9/29/2016
ROUTE	I-55
STATE	MO
DISTRICT	SL
SHEET NO.	26
COUNTY	JEFFERSON
JOB NO.	J6I3110
CONTRACT ID.	
PROJECT NO.	
BRIDGE NO.	

DATE	DESCRIPTION

IF A SEAL IS PRESENT ON THIS SHEET IT HAS BEEN ELECTRONICALLY SEALED AND DATED.

MISSOURI HIGHWAYS AND TRANSPORTATION COMMISSION

105 WEST CAPITOL
JEFFERSON CITY, MO 65102
1-888-ASK-MODOT (1-888-275-6636)

PLAN SHEET
SHEET 23 OF 33

DISCLAIMER
THE PROFESSIONAL WHOSE SIGNATURE AND PERSONAL SEAL APPEAR HEREON ASSUMES RESPONSIBILITY ONLY FOR WHAT APPEARS ON THIS PAGE, AND DISCLAIMS (PURSUANT TO SECTION 327.411 RSMO) SPECIFICATION, ESTIMATES, REPORTS, OR OTHER DOCUMENTS OR INSTRUMENTS NOT SEALED BY THE UNDERSIGNED PROFESSIONAL RELATING TO OR INTENDED TO BE USED FOR ANY PART OR PARTS OF THE PROJECT TO WHICH THIS PAGE REFERS.

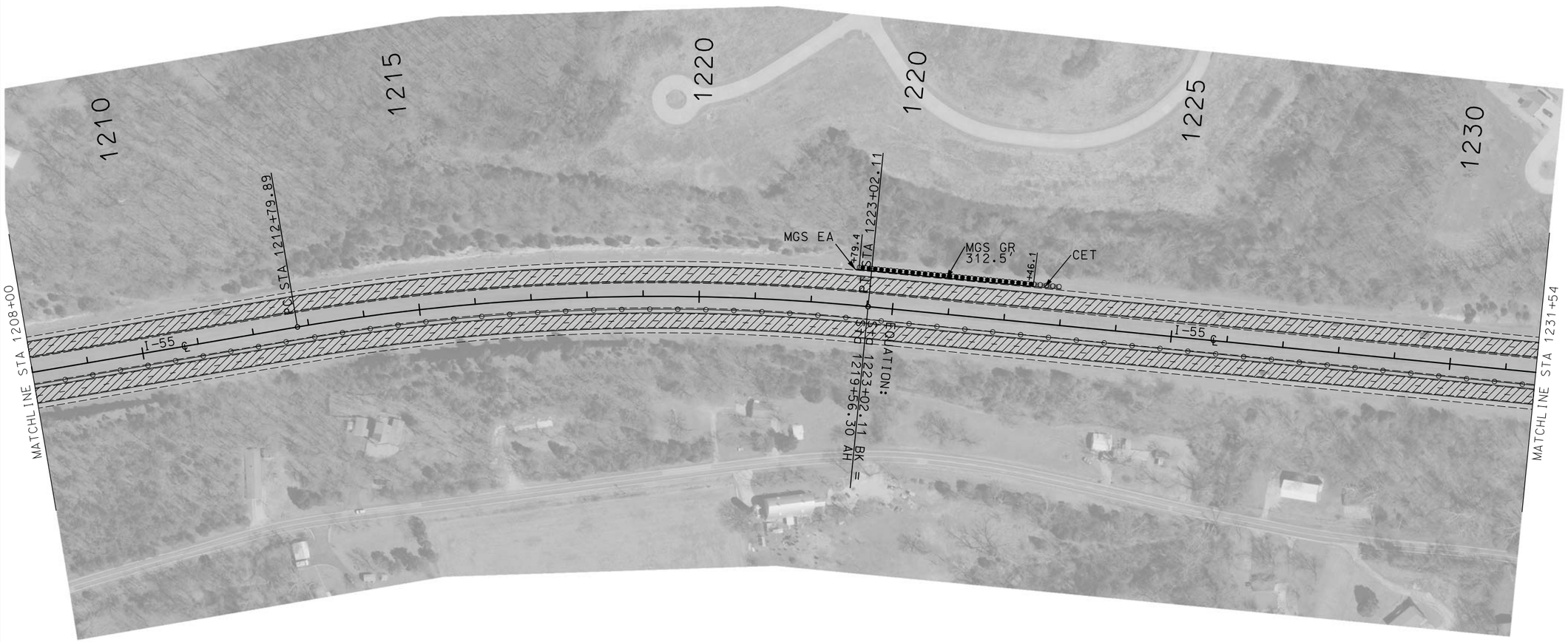

GUARDRAIL LEGEND:

MGS GR - MIDWEST GUARDRAIL SYSTEM (GUARDRAIL - STANDARD SPACING)

MGS BATS - MIDWEST GUARDRAIL SYSTEM (BRIDGE APPROACH TRANSITION SECTION) (37.5' IN LENGTH (TYPICAL)

CET - TYPE A CRASHWORTHY END TERMINAL- MASH

MGS EA - MIDWEST GUARDRAIL SYSTEM (END ANCHOR)

COLDMILL & RESURFACING

EXCEPTION (PROJ. J6I3131)

SCALE
0 100 200 300 400 500

STATE OF MISSOURI
SHIRLEY J. NORRIS
NUMBER PE-28779
PROFESSIONAL ENGINEER
THIS SHEET HAS BEEN SIGNED, SEALED AND DATED ELECTRONICALLY.

DATE PREPARED	9/29/2016
ROUTE	I-55
STATE	MO
DISTRICT	SL
SHEET NO.	27
COUNTY	JEFFERSON
JOB NO.	J6I3110
CONTRACT ID.	
PROJECT NO.	
BRIDGE NO.	

DATE	DESCRIPTION

IF A SEAL IS PRESENT ON THIS SHEET IT HAS BEEN ELECTRONICALLY SEALED AND DATED.

MISSOURI HIGHWAYS AND TRANSPORTATION COMMISSION
105 WEST CAPITOL
JEFFERSON CITY, MO 65102
1-888-ASK-MODOT (1-888-275-6636)

PLAN SHEET
SHEET 24 OF 33

DISCLAIMER
THE PROFESSIONAL WHOSE SIGNATURE AND PERSONAL SEAL APPEAR HEREON ASSUMES RESPONSIBILITY ONLY FOR WHAT APPEARS ON THIS PAGE, AND DISCLAIMS (PURSUANT TO SECTION 327.411 RSMO) SPECIFICATION, ESTIMATES, REPORTS, OR OTHER DOCUMENTS OR INSTRUMENTS NOT SEALED BY THE UNDERSIGNED PROFESSIONAL RELATING TO OR INTENDED TO BE USED FOR ANY PART OR PARTS OF THE PROJECT TO WHICH THIS PAGE REFERS.

COLDMILL & RESURFACING

EXCEPTION (PROJ. J6I3131)

SCALE
0 100 200 300 400 500

STATE OF MISSOURI
SHIRLEY J. NORRIS
NUMBER PE-28779
PROFESSIONAL ENGINEER
THIS SHEET HAS BEEN SIGNED, SEALED AND DATED ELECTRONICALLY.

DATE PREPARED	
9/29/2016	
ROUTE	STATE
I-55	MO
DISTRICT	SHEET NO.
SL	28
COUNTY	
JEFFERSON	
JOB NO.	
J6I3110	
CONTRACT ID.	
PROJECT NO.	
BRIDGE NO.	

DATE	DESCRIPTION

IF A SEAL IS PRESENT ON THIS SHEET IT HAS BEEN ELECTRONICALLY SEALED AND DATED.

MISSOURI HIGHWAYS AND TRANSPORTATION COMMISSION
105 WEST CAPITOL
JEFFERSON CITY, MO 65102
1-888-ASK-MODOT (1-888-275-6636)

PLAN SHEET
SHEET 25 OF 33

DISCLAIMER
THE PROFESSIONAL WHOSE SIGNATURE AND PERSONAL SEAL APPEAR HEREON ASSUMES RESPONSIBILITY ONLY FOR WHAT APPEARS ON THIS PAGE, AND DISCLAIMS (PURSUANT TO SECTION 327.411 RSMO) SPECIFICATION, ESTIMATES, REPORTS, OR OTHER DOCUMENTS OR INSTRUMENTS NOT SEALED BY THE UNDERSIGNED PROFESSIONAL RELATING TO OR INTENDED TO BE USED FOR ANY PART OR PARTS OF THE PROJECT TO WHICH THIS PAGE REFERS.

COLDMILL & RESURFACING

EXCEPTION (PROJ. J6I3131)

SCALE
0 100 200 300 400 500

STATE OF MISSOURI
SHIRLEY J. NORRIS
NUMBER PE-28779
PROFESSIONAL ENGINEER
THIS SHEET HAS BEEN SIGNED, SEALED AND DATED ELECTRONICALLY.

DATE PREPARED	9/29/2016
ROUTE	I-55
STATE	MO
DISTRICT	SL
SHEET NO.	29
COUNTY	JEFFERSON
JOB NO.	J6I3110
CONTRACT ID.	
PROJECT NO.	
BRIDGE NO.	

DATE	DESCRIPTION

IF A SEAL IS PRESENT ON THIS SHEET IT HAS BEEN ELECTRONICALLY SEALED AND DATED.

MISSOURI HIGHWAYS AND TRANSPORTATION COMMISSION
105 WEST CAPITOL
JEFFERSON CITY, MO 65102
1-888-ASK-MODOT (1-888-275-6636)

PLAN SHEET
SHEET 26 OF 33

DISCLAIMER
THE PROFESSIONAL WHOSE SIGNATURE AND PERSONAL SEAL APPEAR HEREON ASSUMES RESPONSIBILITY ONLY FOR WHAT APPEARS ON THIS PAGE, AND DISCLAIMS (PURSUANT TO SECTION 327.411 RSMO) SPECIFICATION, ESTIMATES, REPORTS, OR OTHER DOCUMENTS OR INSTRUMENTS NOT SEALED BY THE UNDERSIGNED PROFESSIONAL RELATING TO OR INTENDED TO BE USED FOR ANY PART OR PARTS OF THE PROJECT TO WHICH THIS PAGE REFERS.

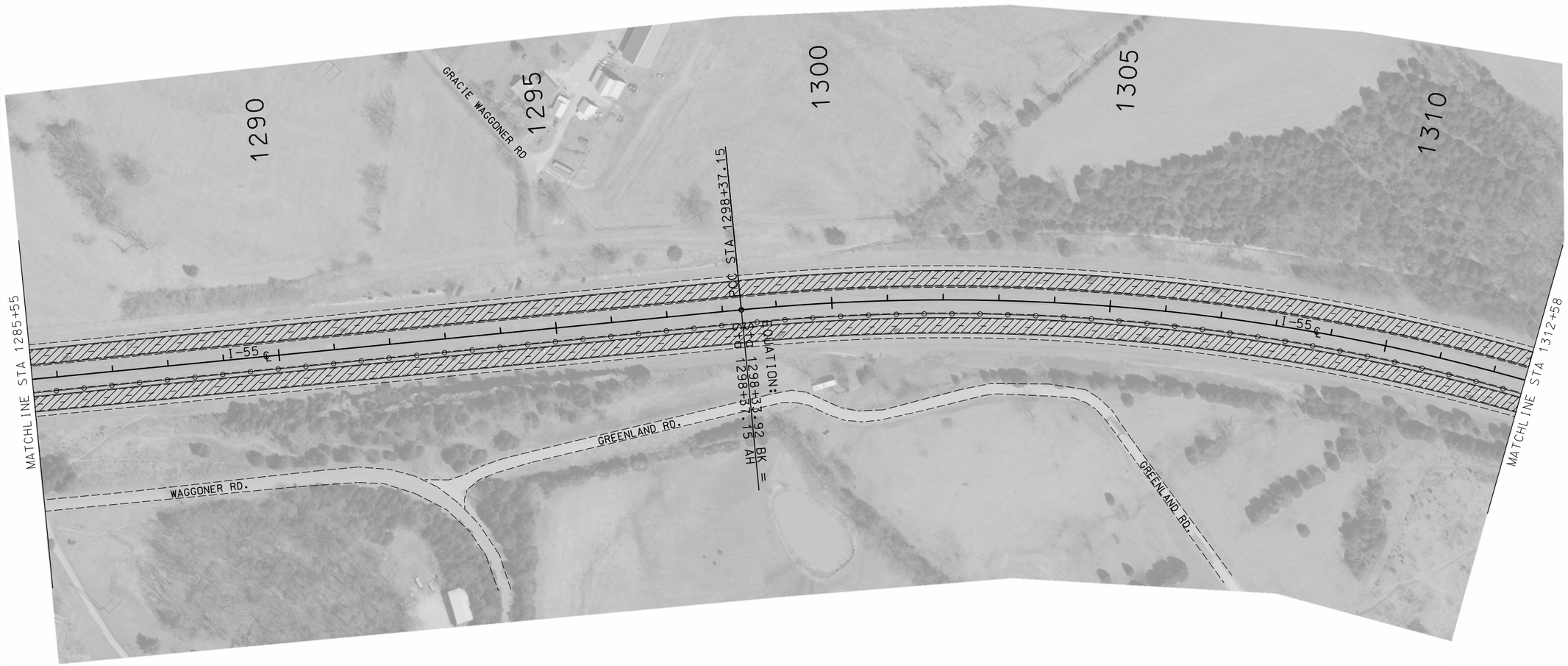

COLDMILL & RESURFACING

EXCEPTION (PROJ. J6I3131)

SCALE
0 100 200 300 400 500

STATE OF MISSOURI
SHIRLEY J. NORRIS
NUMBER PE-28779
PROFESSIONAL ENGINEER
THIS SHEET HAS BEEN SIGNED, SEALED AND DATED ELECTRONICALLY.

DATE PREPARED	10/20/2016
ROUTE	I-55
STATE	MO
DISTRICT	SL
SHEET NO.	30
COUNTY	JEFFERSON
JOB NO.	J6I3110
CONTRACT ID.	
PROJECT NO.	
BRIDGE NO.	

DATE	DESCRIPTION

IF A SEAL IS PRESENT ON THIS SHEET IT HAS BEEN ELECTRONICALLY SEALED AND DATED.

MISSOURI HIGHWAYS AND TRANSPORTATION COMMISSION
105 WEST CAPITOL
JEFFERSON CITY, MO 65102
1-888-ASK-MODOT (1-888-275-6636)

PLAN SHEET
SHEET 27 OF 33

DISCLAIMER
THE PROFESSIONAL WHOSE SIGNATURE AND PERSONAL SEAL APPEAR HEREON ASSUMES RESPONSIBILITY ONLY FOR WHAT APPEARS ON THIS PAGE, AND DISCLAIMS (PURSUANT TO SECTION 327.411 RSMO) SPECIFICATION, ESTIMATES, REPORTS, OR OTHER DOCUMENTS OR INSTRUMENTS NOT SEALED BY THE UNDERSIGNED PROFESSIONAL RELATING TO OR INTENDED TO BE USED FOR ANY PART OR PARTS OF THE PROJECT TO WHICH THIS PAGE REFERS.

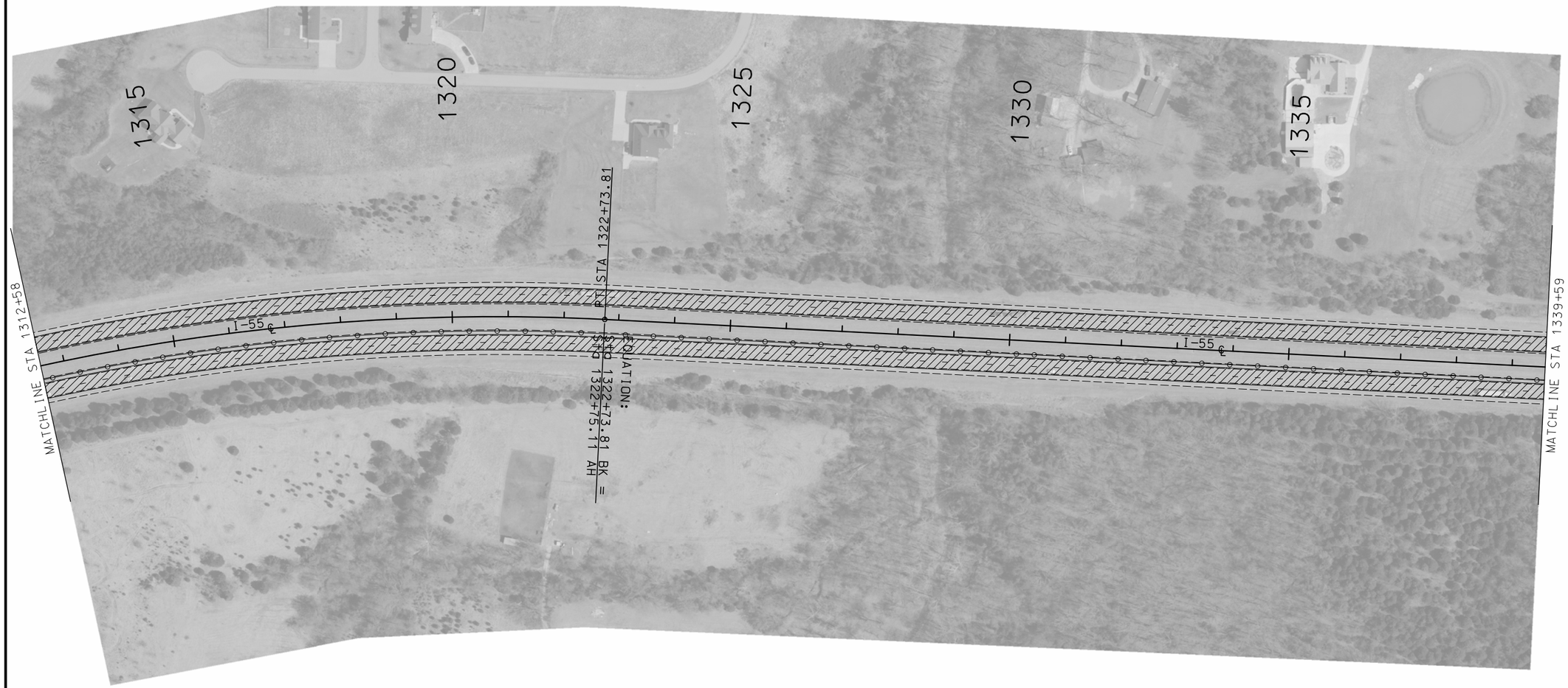

COLDMILL & RESURFACING

EXCEPTION (PROJ. J6I3131)

SCALE
0 100 200 300 400 500

STATE OF MISSOURI
SHIRLEY J. NORRIS
NUMBER PE-28779
PROFESSIONAL ENGINEER
THIS SHEET HAS BEEN SIGNED, SEALED AND DATED ELECTRONICALLY.

DATE PREPARED	9/29/2016
ROUTE	I-55
STATE	MO
DISTRICT	SL
SHEET NO.	31
COUNTY	JEFFERSON
JOB NO.	J6I3110
CONTRACT ID.	
PROJECT NO.	
BRIDGE NO.	

DATE	DESCRIPTION

IF A SEAL IS PRESENT ON THIS SHEET IT HAS BEEN ELECTRONICALLY SEALED AND DATED.

MISSOURI HIGHWAYS AND TRANSPORTATION COMMISSION
MoDOT
105 WEST CAPITOL
JEFFERSON CITY, MO 65102
1-888-ASK-MODOT (1-888-275-6636)

PLAN SHEET
SHEET 28 OF 33

DISCLAIMER
THE PROFESSIONAL WHOSE SIGNATURE AND PERSONAL SEAL APPEAR HEREON ASSUMES RESPONSIBILITY ONLY FOR WHAT APPEARS ON THIS PAGE, AND DISCLAIMS (PURSUANT TO SECTION 327.411 RSMO) SPECIFICATION, ESTIMATES, REPORTS, OR OTHER DOCUMENTS OR INSTRUMENTS NOT SEALED BY THE UNDERSIGNED PROFESSIONAL RELATING TO OR INTENDED TO BE USED FOR ANY PART OR PARTS OF THE PROJECT TO WHICH THIS PAGE REFERS.

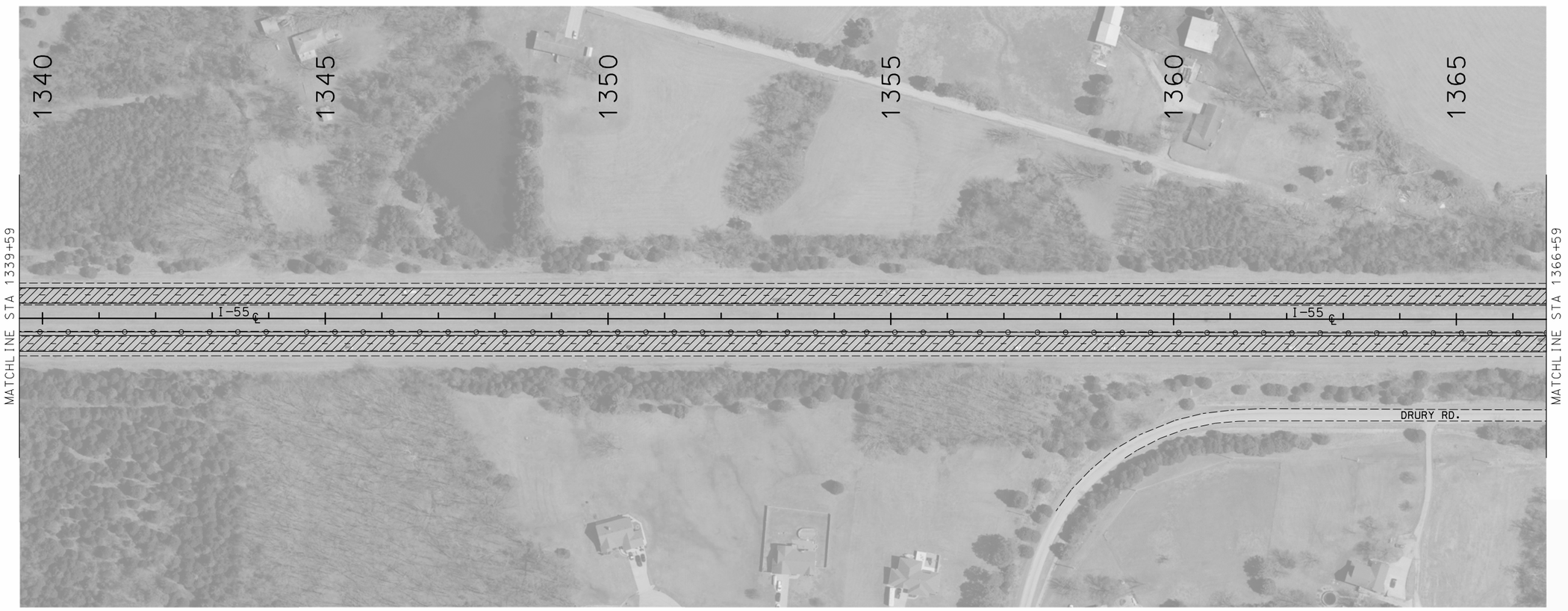

COLDMILL & RESURFACING

EXCEPTION (PROJ. J6I3131)

SCALE
0 100 200 300 400 500

STATE OF MISSOURI
SHIRLEY J. NORRIS
NUMBER PE-28779
PROFESSIONAL ENGINEER
THIS SHEET HAS BEEN SIGNED, SEALED AND DATED ELECTRONICALLY.

DATE PREPARED	9/29/2016
ROUTE	I-55
STATE	MO
DISTRICT	SL
SHEET NO.	32
COUNTY	JEFFERSON
JOB NO.	J6I3110
CONTRACT ID.	
PROJECT NO.	
BRIDGE NO.	

DATE	DESCRIPTION

IF A SEAL IS PRESENT ON THIS SHEET IT HAS BEEN ELECTRONICALLY SEALED AND DATED.

MISSOURI HIGHWAYS AND TRANSPORTATION COMMISSION
105 WEST CAPITOL
JEFFERSON CITY, MO 65102
1-888-ASK-MODOT (1-888-275-6636)

PLAN SHEET
SHEET 29 OF 33

DISCLAIMER
THE PROFESSIONAL WHOSE SIGNATURE AND PERSONAL SEAL APPEAR HEREON ASSUMES RESPONSIBILITY ONLY FOR WHAT APPEARS ON THIS PAGE, AND DISCLAIMS (PURSUANT TO SECTION 327.411 RSMO) SPECIFICATION, ESTIMATES, REPORTS, OR OTHER DOCUMENTS OR INSTRUMENTS NOT SEALED BY THE UNDERSIGNED PROFESSIONAL RELATING TO OR INTENDED TO BE USED FOR ANY PART OR PARTS OF THE PROJECT TO WHICH THIS PAGE REFERS.

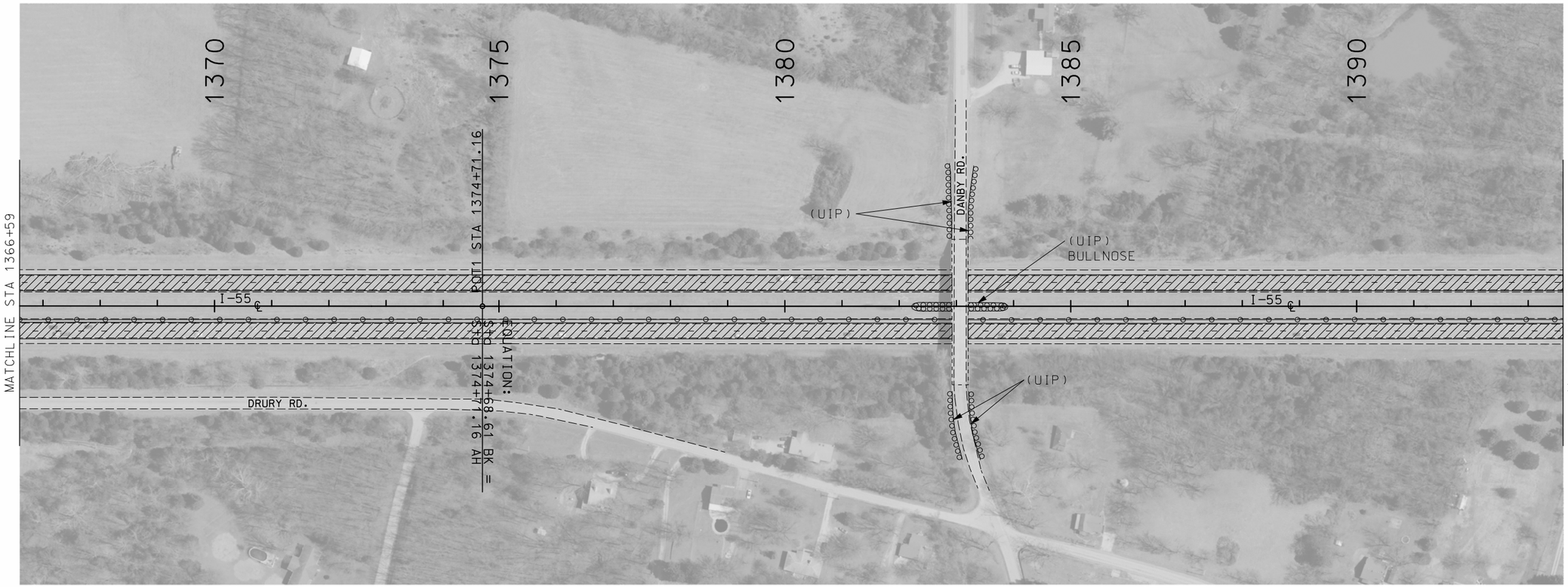

COLDMILL & RESURFACING

EXCEPTION (PROJ. J6I3131)

SCALE
0 100 200 300 400 500

STATE OF MISSOURI
SHIRLEY J. NORRIS
NUMBER PE-28779
PROFESSIONAL ENGINEER
THIS SHEET HAS BEEN SIGNED, SEALED AND DATED ELECTRONICALLY.

DATE PREPARED	9/29/2016
ROUTE	I-55
STATE	MO
DISTRICT	SL
SHEET NO.	33
COUNTY	JEFFERSON
JOB NO.	J6I3110
CONTRACT ID.	
PROJECT NO.	
BRIDGE NO.	

DATE	DESCRIPTION

IF A SEAL IS PRESENT ON THIS SHEET IT HAS BEEN ELECTRONICALLY SEALED AND DATED.

MISSOURI HIGHWAYS AND TRANSPORTATION COMMISSION
105 WEST CAPITOL
JEFFERSON CITY, MO 65102
1-888-ASK-MODOT (1-888-275-6636)

PLAN SHEET
SHEET 30 OF 33

DISCLAIMER
THE PROFESSIONAL WHOSE SIGNATURE AND PERSONAL SEAL APPEAR HEREON ASSUMES RESPONSIBILITY ONLY FOR WHAT APPEARS ON THIS PAGE, AND DISCLAIMS (PURSUANT TO SECTION 327.411 RSMO) SPECIFICATION, ESTIMATES, REPORTS, OR OTHER DOCUMENTS OR INSTRUMENTS NOT SEALED BY THE UNDERSIGNED PROFESSIONAL RELATING TO OR INTENDED TO BE USED FOR ANY PART OR PARTS OF THE PROJECT TO WHICH THIS PAGE REFERS.

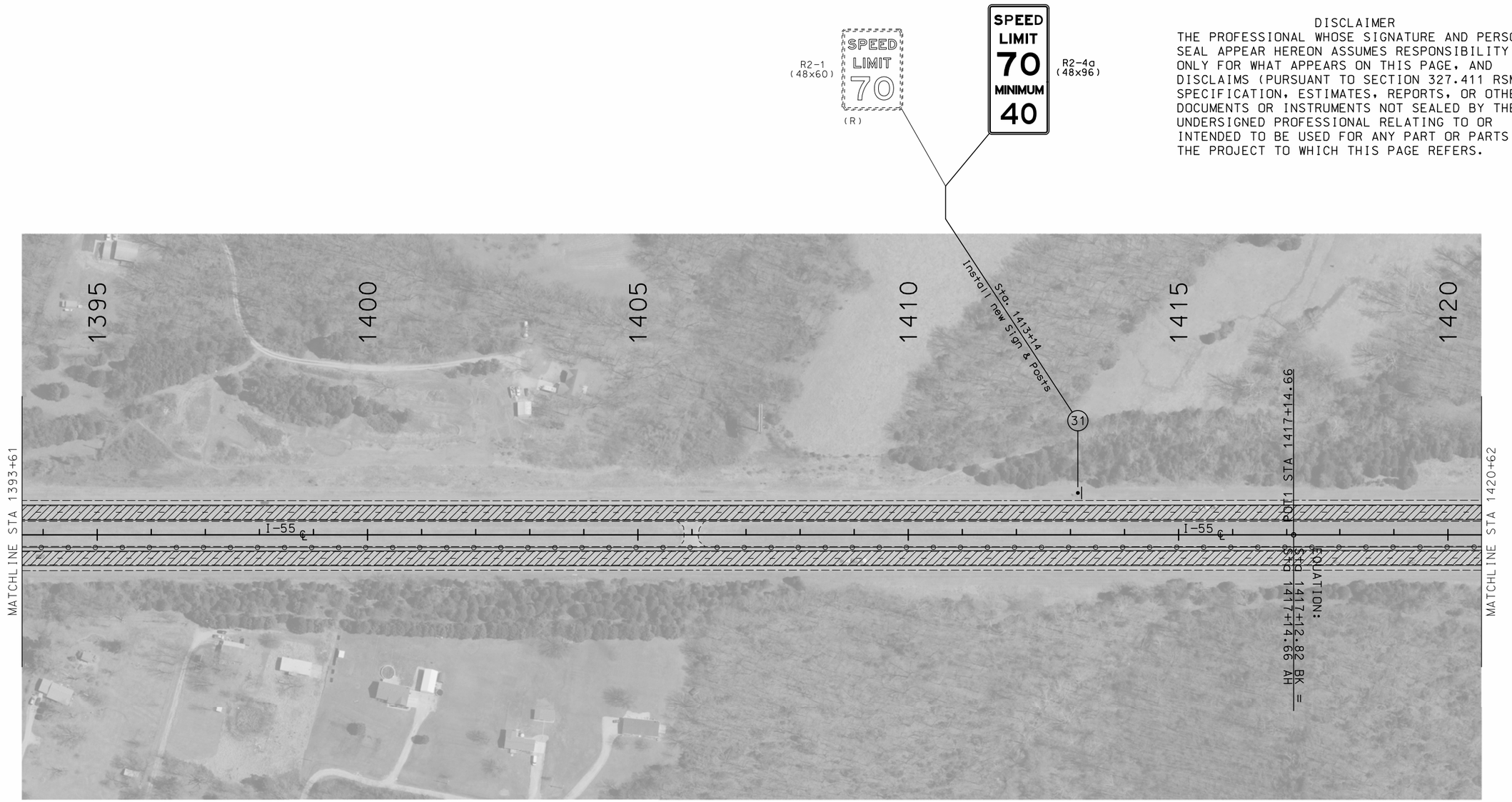

COLDMILL & RESURFACING

EXCEPTION (PROJ. J6I3131)

SCALE
0 100 200 300 400 500

STATE OF MISSOURI
SHIRLEY J. NORRIS
NUMBER PE-28779
PROFESSIONAL ENGINEER
THIS SHEET HAS BEEN SIGNED, SEALED AND DATED ELECTRONICALLY.

DATE PREPARED	9/29/2016
ROUTE	I-55
STATE	MO
DISTRICT	SL
SHEET NO.	34
COUNTY	JEFFERSON
JOB NO.	J6I3110
CONTRACT ID.	
PROJECT NO.	
BRIDGE NO.	

DATE	DESCRIPTION

MISSOURI HIGHWAYS AND TRANSPORTATION COMMISSION
105 WEST CAPITOL
JEFFERSON CITY, MO 65102
1-888-ASK-MODOT (1-888-275-6636)

PLAN SHEET
SHEET 31 OF 33

IF A SEAL IS PRESENT ON THIS SHEET IT HAS BEEN ELECTRONICALLY SEALED AND DATED.

DISCLAIMER
THE PROFESSIONAL WHOSE SIGNATURE AND PERSONAL SEAL APPEAR HEREON ASSUMES RESPONSIBILITY ONLY FOR WHAT APPEARS ON THIS PAGE, AND DISCLAIMS (PURSUANT TO SECTION 327.411 RSMO) SPECIFICATION, ESTIMATES, REPORTS, OR OTHER DOCUMENTS OR INSTRUMENTS NOT SEALED BY THE UNDERSIGNED PROFESSIONAL RELATING TO OR INTENDED TO BE USED FOR ANY PART OR PARTS OF THE PROJECT TO WHICH THIS PAGE REFERS.

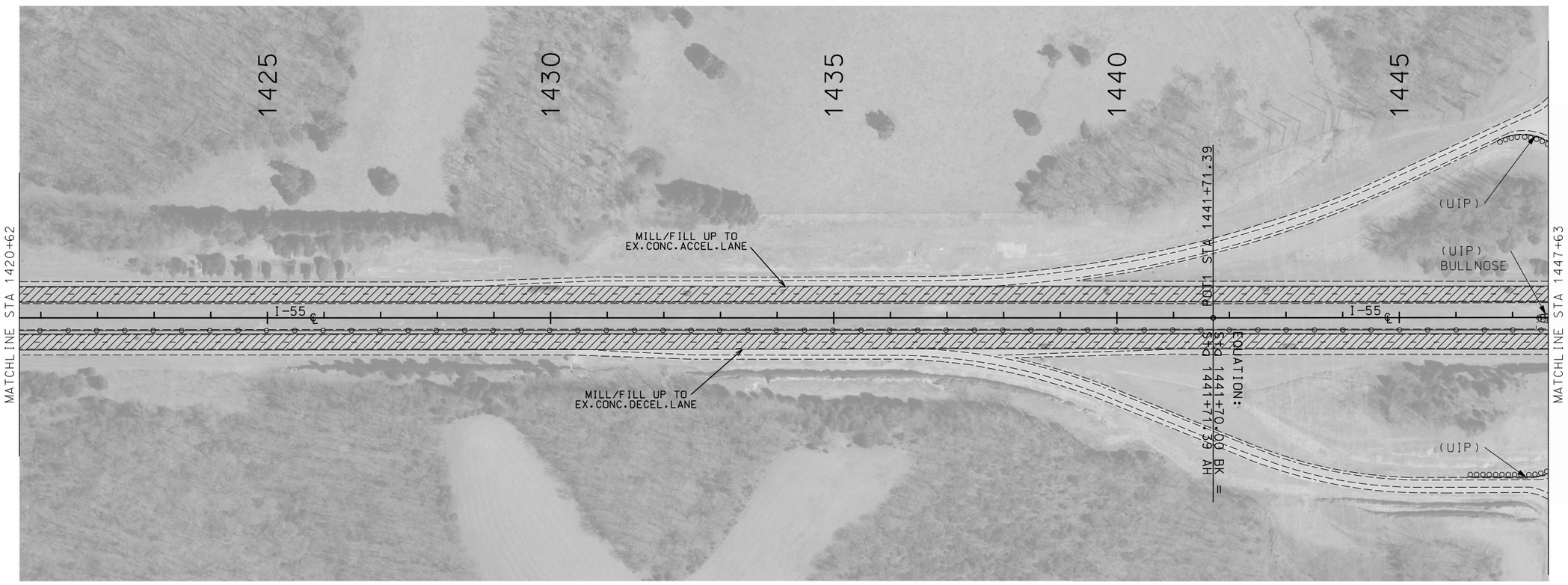

COLDMILL & RESURFACING

EXCEPTION (PROJ. J6I3131)

SCALE
0 100 200 300 400 500

STATE OF MISSOURI
SHIRLEY J. NORRIS
NUMBER PE-28779
PROFESSIONAL ENGINEER
THIS SHEET HAS BEEN SIGNED, SEALED AND DATED ELECTRONICALLY.

DATE PREPARED	9/29/2016
ROUTE	I-55
STATE	MO
DISTRICT	SL
SHEET NO.	35
COUNTY	JEFFERSON
JOB NO.	J6I3110
CONTRACT ID.	
PROJECT NO.	
BRIDGE NO.	

DATE	DESCRIPTION

IF A SEAL IS PRESENT ON THIS SHEET IT HAS BEEN ELECTRONICALLY SEALED AND DATED.

MISSOURI HIGHWAYS AND TRANSPORTATION COMMISSION
105 WEST CAPITOL
JEFFERSON CITY, MO 65102
1-888-ASK-MODOT (1-888-275-6636)

PLAN SHEET
SHEET 32 OF 33

GUARDRAIL LEGEND:

MGS GR - MIDWEST GUARDRAIL SYSTEM (GUARDRAIL - STANDARD SPACING)

MGS BATS - MIDWEST GUARDRAIL SYSTEM (BRIDGE APPROACH TRANSITION SECTION) (37.5' IN LENGTH (TYPICAL)

CET - TYPE A CRASHWORTHY END TERMINAL- MASH

MGS EA - MIDWEST GUARDRAIL SYSTEM (END ANCHOR)

DISCLAIMER

THE PROFESSIONAL WHOSE SIGNATURE AND PERSONAL SEAL APPEAR HEREON ASSUMES RESPONSIBILITY ONLY FOR WHAT APPEARS ON THIS PAGE, AND DISCLAIMS (PURSUANT TO SECTION 327.411 RSMO) SPECIFICATION, ESTIMATES, REPORTS, OR OTHER DOCUMENTS OR INSTRUMENTS NOT SEALED BY THE UNDERSIGNED PROFESSIONAL RELATING TO OR INTENDED TO BE USED FOR ANY PART OR PARTS OF THE PROJECT TO WHICH THIS PAGE REFERS.

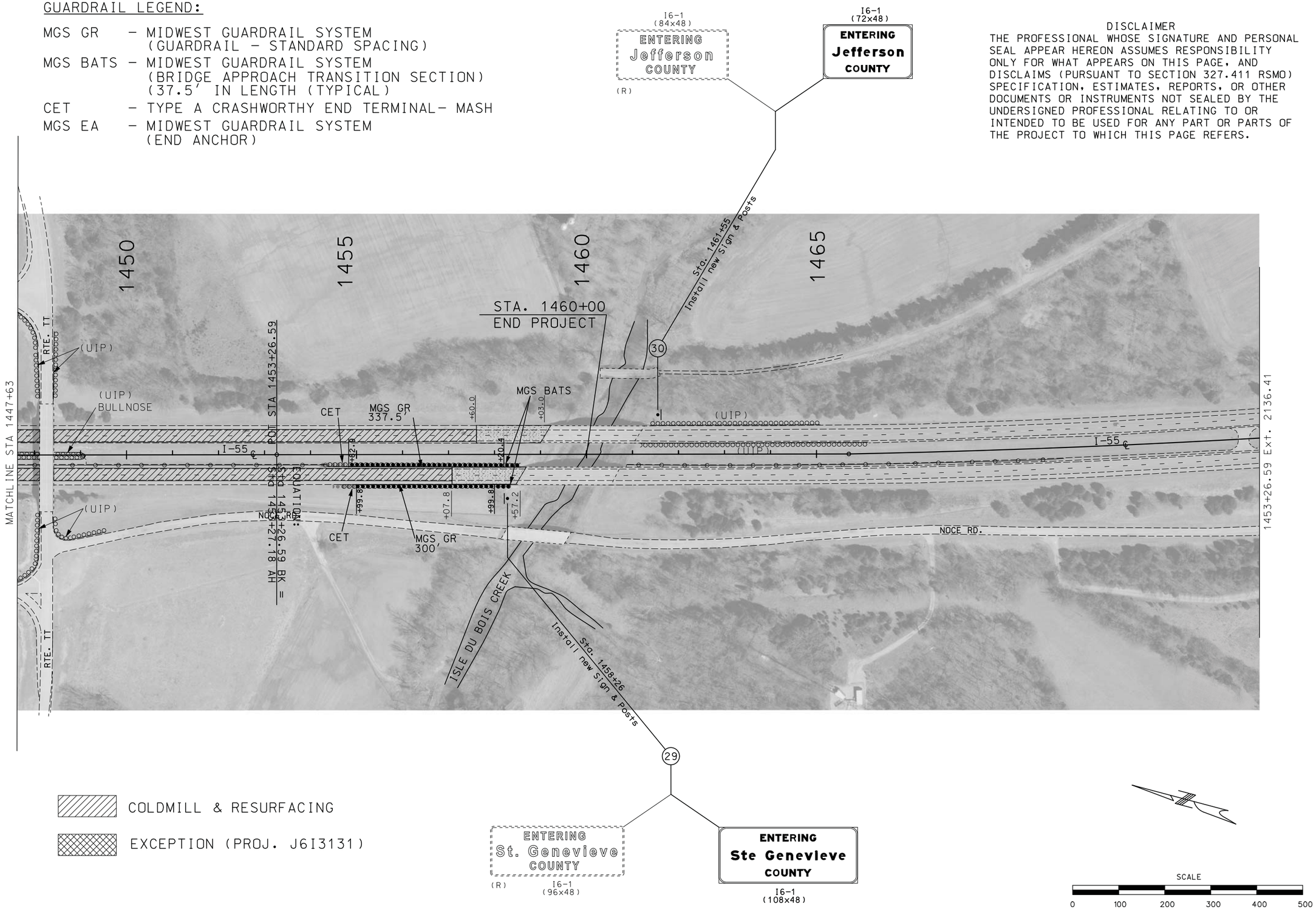

STATE OF MISSOURI
SHIRLEY J. NORRIS
NUMBER PE-28779
PROFESSIONAL ENGINEER

THIS SHEET HAS BEEN SIGNED, SEALED AND DATED ELECTRONICALLY.

DATE PREPARED	9/29/2016
ROUTE	I-55
STATE	MO
DISTRICT	SL
SHEET NO.	36
COUNTY	JEFFERSON
JOB NO.	J6I3110
CONTRACT ID.	
PROJECT NO.	
BRIDGE NO.	

DATE	DESCRIPTION

IF A SEAL IS PRESENT ON THIS SHEET IT HAS BEEN ELECTRONICALLY SEALED AND DATED.

MISSOURI HIGHWAYS AND TRANSPORTATION COMMISSION

105 WEST CAPITOL
JEFFERSON CITY, MO 65102
1-888-ASK-MODOT (1-888-275-6636)

PLAN SHEET
SHEET 33 OF 33

DYNAMIC ZIPPER MERGE SYSTEM

TEMPORARY TRAFFIC CONTROL FOR INFORMATION USE ONLY AND TO BE PAID FOR ON COMBINATION PROJECT J6I3131.

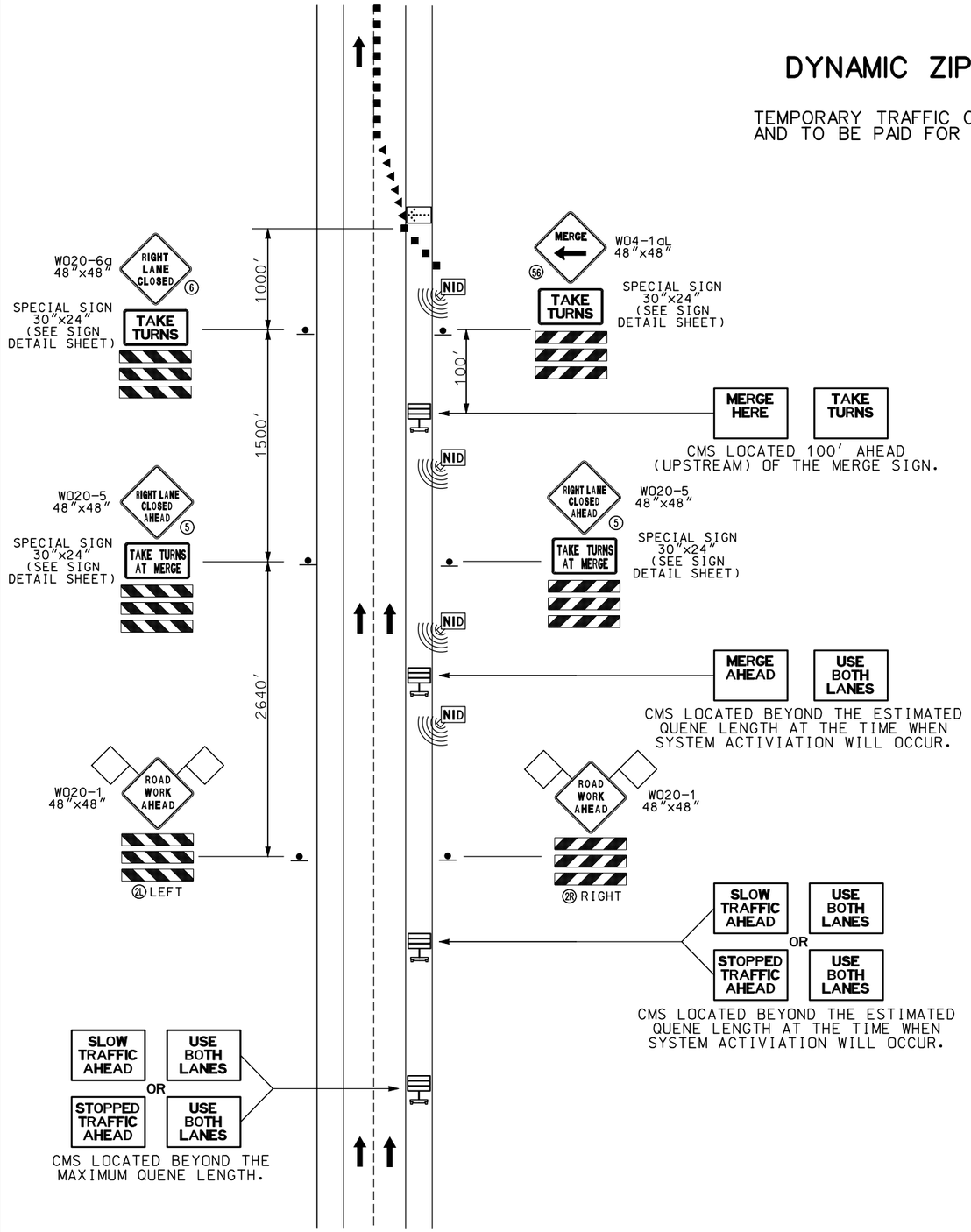

63 **TAKE TURNS** — SPECIAL SIGN 30"x24" (SEE SIGN DETAIL SHEET)

62 **TAKE TURNS AT MERGE** — SPECIAL SIGN 30"x24" (SEE SIGN DETAIL SHEET)

61 **DURING BACKUPS USE BOTH LANES** / **TAKE TURNS AT MERGE** — SPECIAL SIGN 96"x48" (SEE SIGN DETAIL SHEET)

TRAFFIC CONTROL LEGEND

- SIGN (SINGLE SIDED)
- ADVANCED WARNING RAIL SYSTEM
- CHANNELIZER (TRIM LINE)
- DIRECTIONAL INDICATOR BARRICADE
- CHANGEABLE MESSAGE SIGN
- FLASHING ARROW PANEL
- NID NON-INTRUSIVE DETECTOR

NOTES:

THE CHANGEABLE MESSAGE SIGNS AND NON-INTRUSIVE DETECTORS SHALL BE SPACED ALONG THE ROUTE AS NEEDED FOR PROPER SYSTEMS OPERATIONS.

STATIC SIGNS MAY BE USED AS A SUPPLEMENT FOR CMS BOARDS. THE STATIC SIGN PROVIDES A CONTINUOUS REINFORCING MESSAGE TO THE TRAVELING PUBLIC.

STATIC SIGNS MAY BE LOCATED BEYOND AND WITHIN THE ANTICIPATED QUENE LENGTH.

NOT TO SCALE

DISCLAIMER
THE PROFESSIONAL WHOSE SIGNATURE AND PERSONAL SEAL APPEAR HEREON ASSUMES RESPONSIBILITY ONLY FOR WHAT APPEARS ON THIS PAGE, AND DISCLAIMS (PURSUANT TO SECTION 327.411 RSMO) SPECIFICATION, ESTIMATES, REPORTS, OR OTHER DOCUMENTS OR INSTRUMENTS NOT SEALED BY THE UNDERSIGNED PROFESSIONAL RELATING TO OR INTENDED TO BE USED FOR ANY PART OR PARTS OF THE PROJECT TO WHICH THIS PAGE REFERS.

STATE OF MISSOURI
SHIRLEY J. NORRIS
NUMBER PE-28779
PROFESSIONAL ENGINEER
THIS SHEET HAS BEEN SIGNED, SEALED AND DATED ELECTRONICALLY.

DATE PREPARED	9/29/2016
ROUTE	I-55
STATE	MO
DISTRICT	SL
SHEET NO.	37
COUNTY	JEFFERSON
JOB NO.	J6I3110
CONTRACT ID.	
PROJECT NO.	
BRIDGE NO.	

DESCRIPTION | DATE

IF A SEAL IS PRESENT ON THIS SHEET IT HAS BEEN ELECTRONICALLY SEALED AND DATED.

MISSOURI HIGHWAYS AND TRANSPORTATION COMMISSION
105 WEST CAPITOL
JEFFERSON CITY, MO 65102
1-888-ASK-MODOT (1-888-275-6636)

TRAFFIC CONTROL

DYNAMIC ZIPPER MERGE SYSTEM

SHEET 1 OF 6

ANY WORK INDICATED ON THE PLANS THAT EXTENDS BEYOND THE PROJECT LIMITS IS CONSIDERED INCIDENTAL TO AND A PART OF THE CONSTRUCTION OF THIS PROJECT.

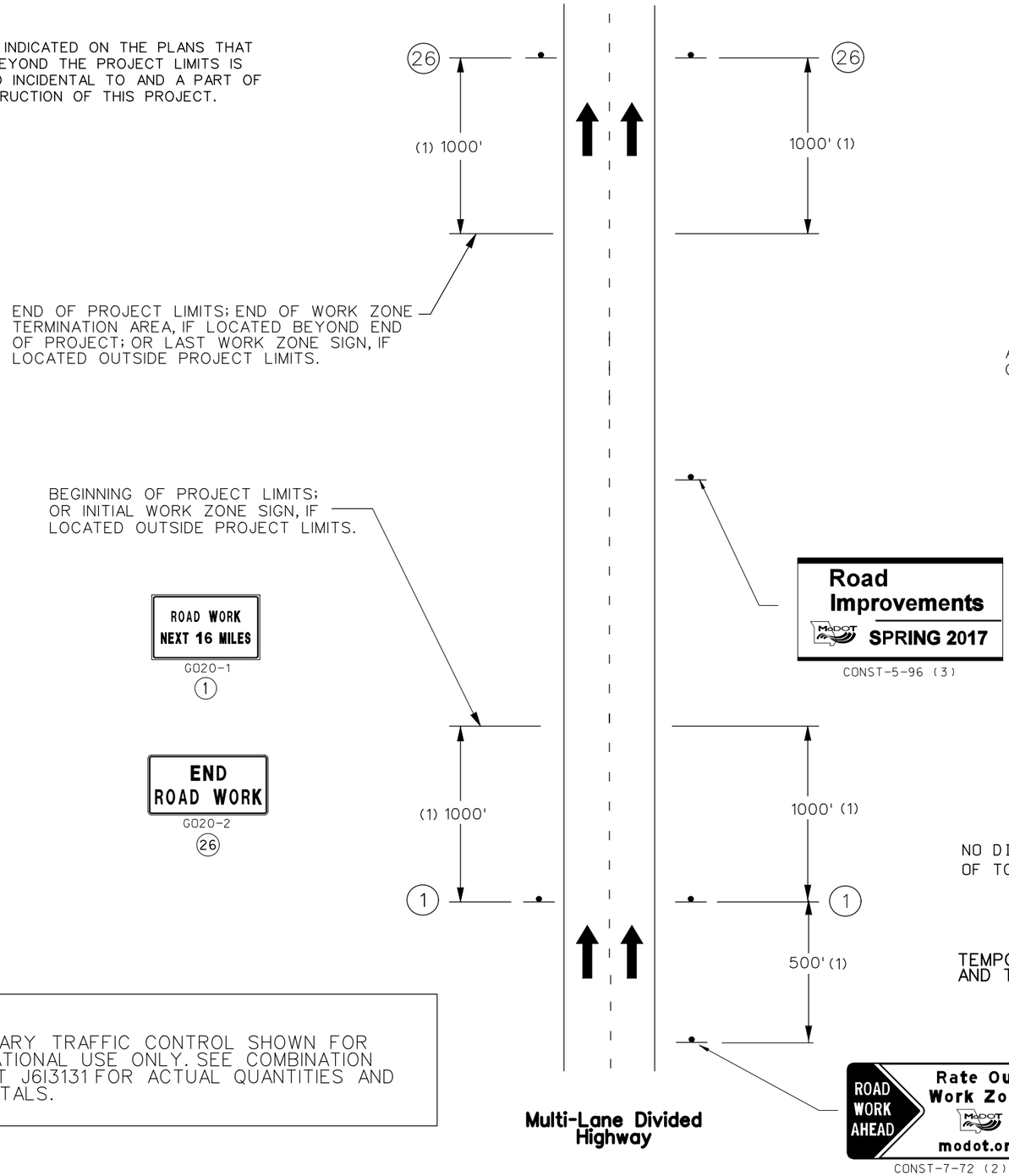

NOTE:
TEMPORARY TRAFFIC CONTROL SHOWN FOR INFORMATIONAL USE ONLY. SEE COMBINATION PROJECT J6I3131 FOR ACTUAL QUANTITIES AND PAY TOTALS.

DISCLAIMER
THE PROFESSIONAL WHOSE SIGNATURE AND PERSONAL SEAL APPEAR HEREON ASSUMES RESPONSIBILITY ONLY FOR WHAT APPEARS ON THIS PAGE, AND DISCLAIMS (PURSUANT TO SECTION 327.411 RSMO) SPECIFICATION, ESTIMATES, REPORTS, OR OTHER DOCUMENTS OR INSTRUMENTS NOT SEALED BY THE UNDERSIGNED PROFESSIONAL RELATING TO OR INTENDED TO BE USED FOR ANY PART OR PARTS OF THE PROJECT TO WHICH THIS PAGE REFERS.

NOTES:

SIGN (1) IS ONLY REQUIRED ON PROJECTS OF 2 MILES OR GREATER IN LENGTH.

SIGN (26) IS USED ON ALL PROJECTS WHERE SIGN (1) IS USED.

OTHER SIGNS SUCH AS DETOUR OR ALTERNATE ROUTE SIGNING MAY BE USED OUTSIDE THE PROJECT LIMITS.

ANY EXISTING SIGNING THAT CONFLICTS WITH THE TRAFFIC CONTROL SIGNING SHALL BE COMPLETELY COVERED OR REMOVED.

(1) DISTANCE MAY BE ADJUSTED ACCORDING TO FIELD CONDITIONS. WHERE TRAFFIC BACKUPS ARE EXPECTED BEYOND THE ADVANCE WARNING AREA, ADDITIONAL SIGNING MAY BE NEEDED.

(2) SIGN CONST-7-72 IS PLACED 500 FEET BEFORE THE BEGINNING OF PROJECT LIMITS OR THE ROAD WORK AHEAD SIGN OR ROAD WORK NEXT XX MILES SIGN, IF USED, WHEN THESE SIGNS ARE LOCATED OUTSIDE OF THE PROJECT LIMITS.

(3) CONST-5-96 SIGN IS PLACED IN A VISIBLE AREA WITHIN THE PROJECT LIMITS PROVIDED ITS PLACEMENT DOES NOT DISRUPT A SEQUENCE OF SIGNS. IF A VISIBLE LOCATION WITHIN THE PROJECT IS NOT AVAILABLE, THE SIGN MAY BE PLACED 500 FEET BEFORE SIGN CONST-7-72.

NO DIRECT PAY WILL BE MADE FOR RELOCATION OF TCP SIGNS.

TEMPORARY TRAFFIC CONTROL FOR INFORMATION USE ONLY AND TO BE PAID FOR ON COMBINATION PROJECT J6I3131.

TRAFFIC CONTROL LEGEND

• SIGN (SINGLE SIDED)

BEGIN & END OF PROJECT SIGNING

NOT TO SCALE

STATE OF MISSOURI
SHIRLEY J. NORRIS
NUMBER PE-28779
PROFESSIONAL ENGINEER
THIS SHEET HAS BEEN SIGNED, SEALED AND DATED ELECTRONICALLY.

DATE PREPARED	9/29/2016
ROUTE	I-55
STATE	MO
DISTRICT	SL
SHEET NO.	38
COUNTY	JEFFERSON
JOB NO.	J6I3110
CONTRACT ID.	
PROJECT NO.	
BRIDGE NO.	

DATE	DESCRIPTION

MISSOURI HIGHWAYS AND TRANSPORTATION COMMISSION
105 WEST CAPITOL
JEFFERSON CITY, MO 65102
1-888-ASK-MODOT (1-888-275-6636)

IF A SEAL IS PRESENT ON THIS SHEET IT HAS BEEN ELECTRONICALLY SEALED AND DATED.

TRAFFIC CONTROL
BEGIN & END OF PROJECT SIGNING
SHEET 2 OF 6

Lane Closure
Single Lane of Multi-Lane Divided Highway

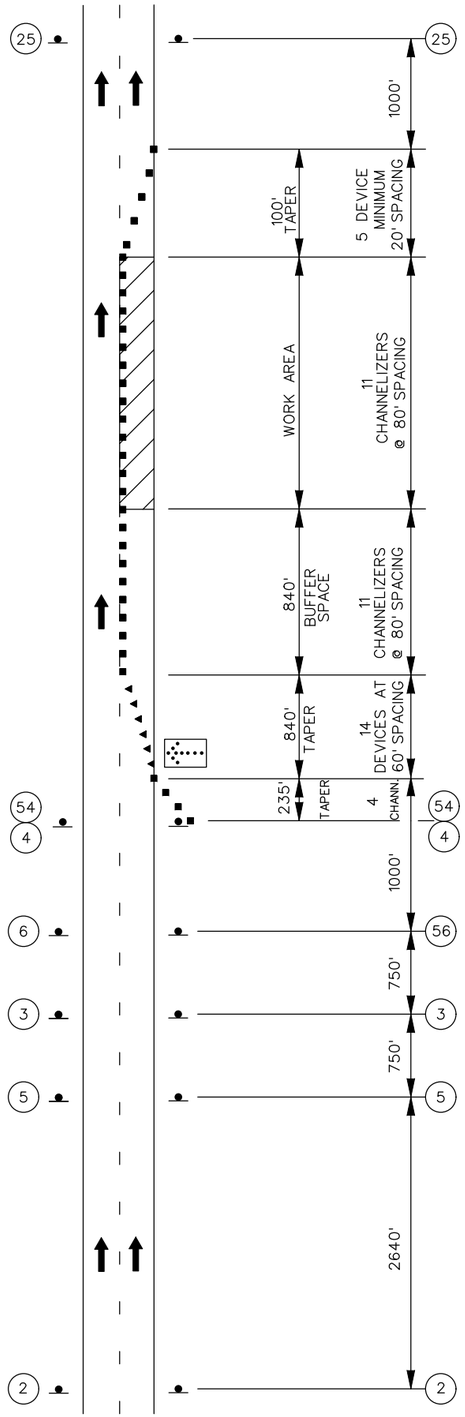

Two-Lane Divided Highway

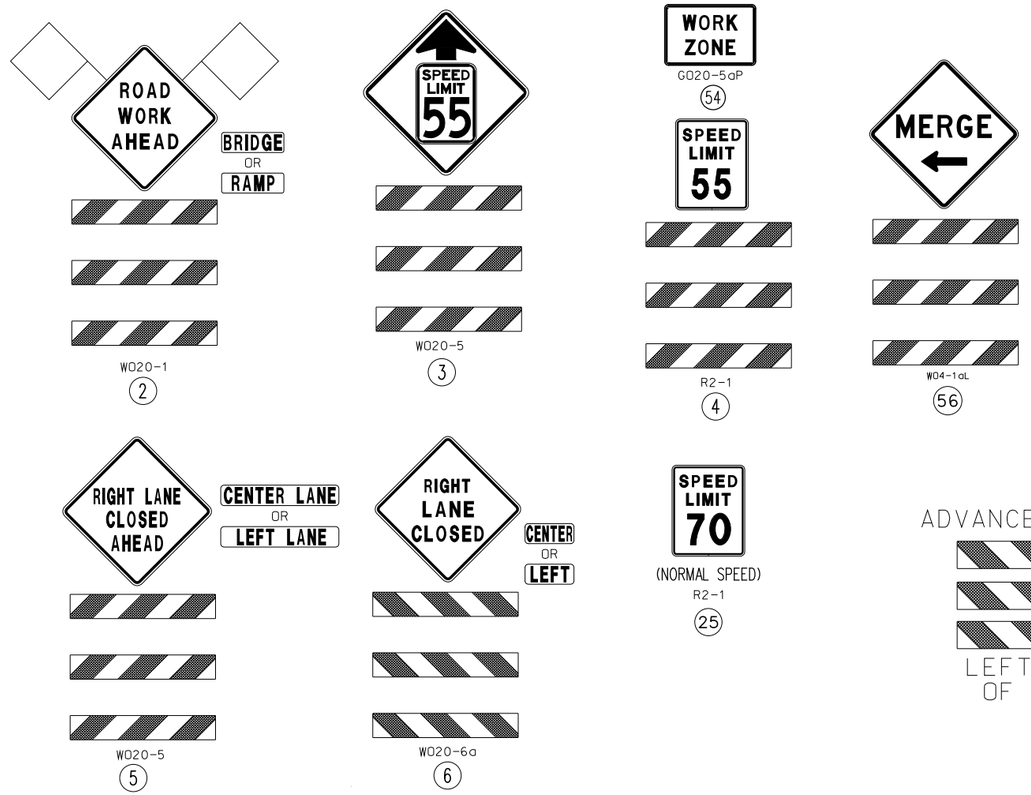

ADVANCE WARNING RAIL SYSTEM

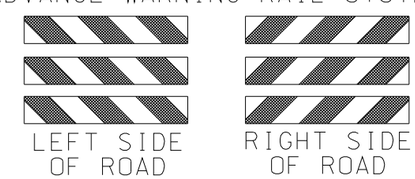

TEMPORARY TRAFFIC CONTROL FOR INFORMATION USE ONLY AND TO BE PAID FOR ON COMBINATION PROJECT J6I3131.

NOTES:

SEE BEGIN/END OF PROJECT SIGNING SHEET FOR ADDITIONAL SIGNS.

ANY EXISTING SIGNING THAT CONFLICTS WITH THE TRAFFIC CONTROL SIGNING SHALL BE COMPLETELY COVERED OR REMOVED.

NO DIRECT PAY WILL BE MADE FOR RELOCATION OF TCP SIGNS.

NOTE:
TEMPORARY TRAFFIC CONTROL SHOWN FOR INFORMATIONAL USE ONLY. SEE COMBINATION PROJECT J6I3131 FOR ACTUAL QUANTITIES AND PAY TOTALS.

TRAFFIC CONTROL LEGEND

- SIGN (SINGLE SIDED)
- SIGN (DOUBLE SIDED)
- FLAGGER
- DIRECTIONAL INDICATOR BARRICADE
- CHANNELIZER (TRIM-LINE)
- BARRICADE
- CHANGEABLE MESSAGE SIGN
- FLASHING ARROW PANEL

NOT TO SCALE

DISCLAIMER
THE PROFESSIONAL WHOSE SIGNATURE AND PERSONAL SEAL APPEAR HEREON ASSUMES RESPONSIBILITY ONLY FOR WHAT APPEARS ON THIS PAGE, AND DISCLAIMS (PURSUANT TO SECTION 327.411 RSMO) SPECIFICATION, ESTIMATES, REPORTS, OR OTHER DOCUMENTS OR INSTRUMENTS NOT SEALED BY THE UNDERSIGNED PROFESSIONAL RELATING TO OR INTENDED TO BE USED FOR ANY PART OR PARTS OF THE PROJECT TO WHICH THIS PAGE REFERS.

STATE OF MISSOURI
SHIRLEY J. NORRIS
NUMBER PE-28779
PROFESSIONAL ENGINEER
THIS SHEET HAS BEEN SIGNED, SEALED AND DATED ELECTRONICALLY.

DATE PREPARED: 9/29/2016
ROUTE: I-55 | STATE: MO
DISTRICT: SL | SHEET NO.: 39
COUNTY: JEFFERSON
JOB NO.: J6I3110
CONTRACT ID.
PROJECT NO.
BRIDGE NO.

DATE	DESCRIPTION

IF A SEAL IS PRESENT ON THIS SHEET IT HAS BEEN ELECTRONICALLY SEALED AND DATED.

MISSOURI HIGHWAYS AND TRANSPORTATION COMMISSION
105 WEST CAPITOL
JEFFERSON CITY, MO 65102
1-888-ASK-MODOT (1-888-275-6636)

TRAFFIC CONTROL
SINGLE LANE CLOSURE
SHEET 3 OF 6

TEMPORARY TRAFFIC CONTROL FOR INFORMATION USE ONLY AND TO BE PAID FOR ON COMBINATION PROJECT J6I3131.

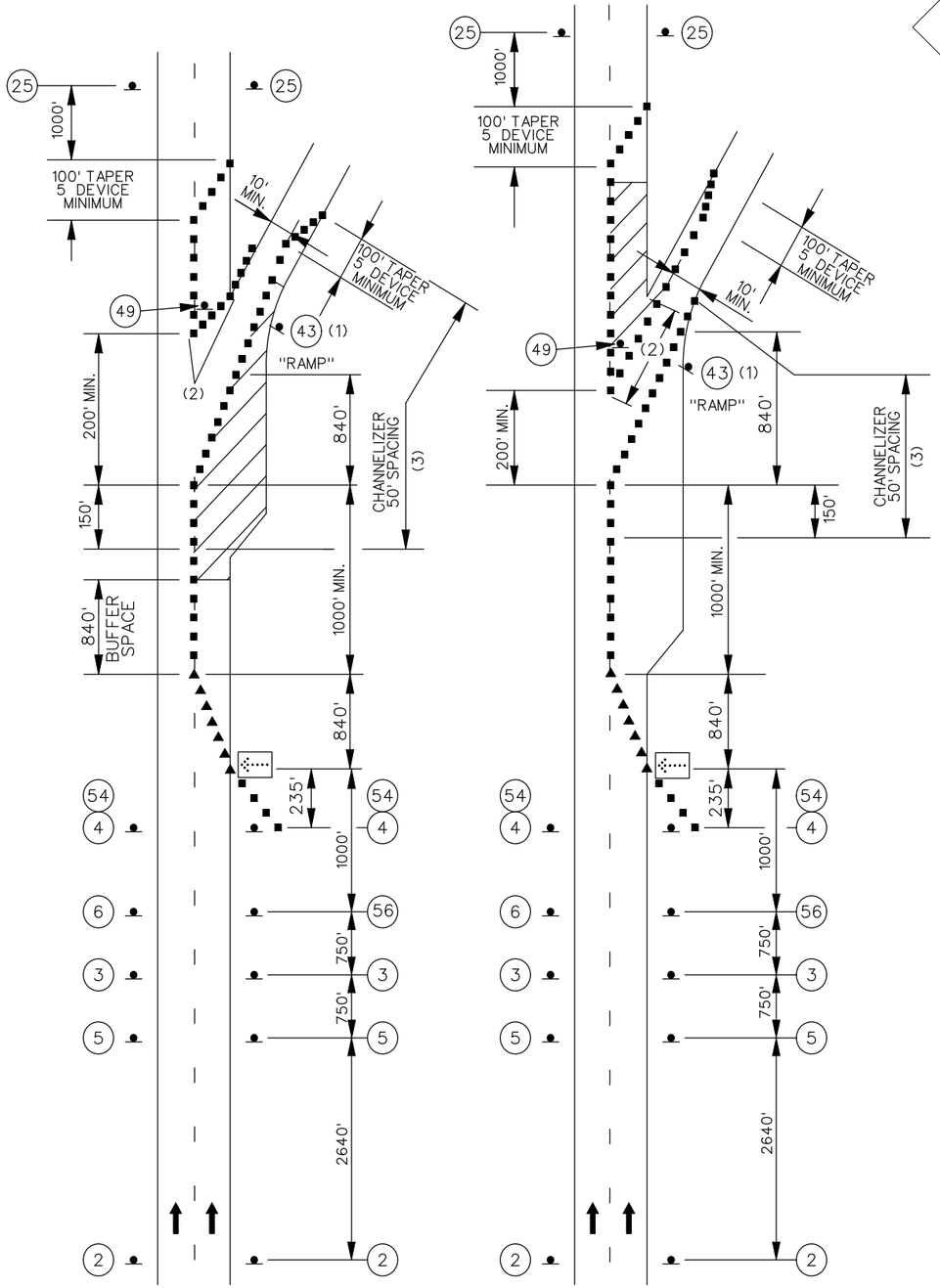

LANE CLOSURE EXIT RAMP AREAS

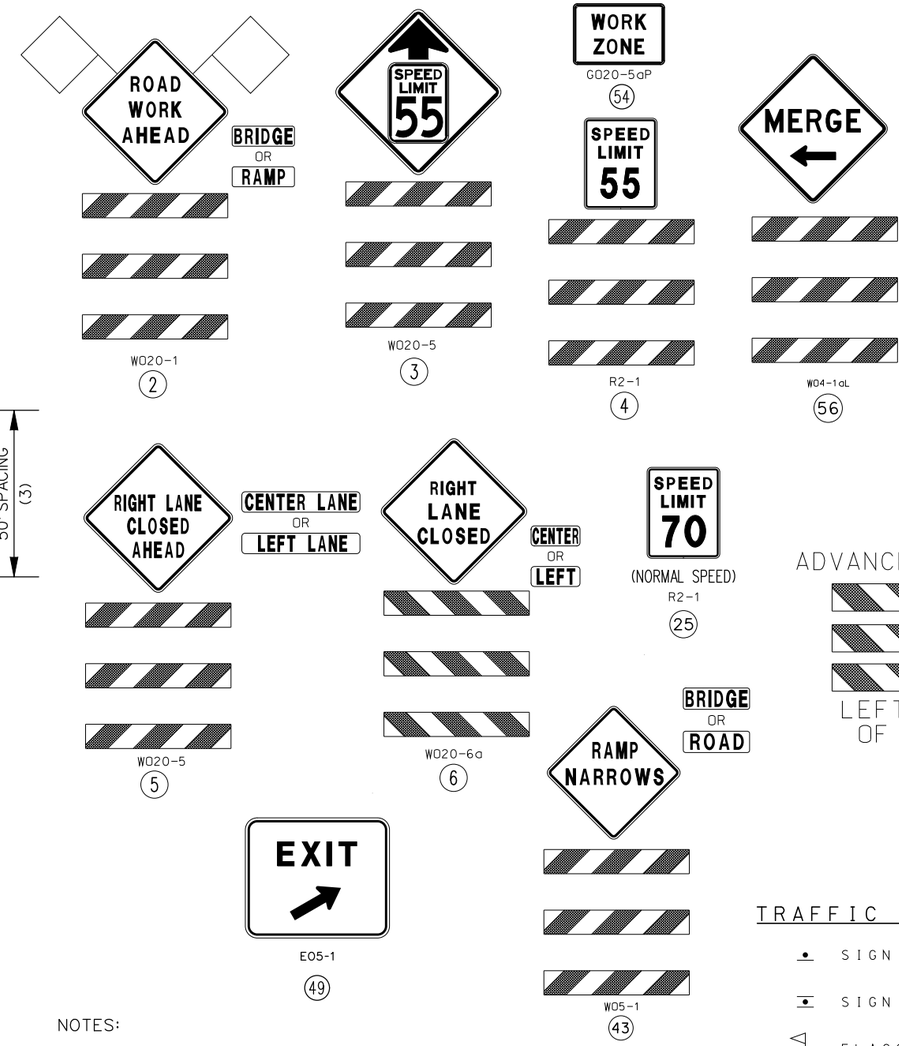

DISCLAIMER

THE PROFESSIONAL WHOSE SIGNATURE AND PERSONAL SEAL APPEAR HEREON ASSUMES RESPONSIBILITY ONLY FOR WHAT APPEARS ON THIS PAGE, AND DISCLAIMS (PURSUANT TO SECTION 327.411 RSMO) SPECIFICATION, ESTIMATES, REPORTS, OR OTHER DOCUMENTS OR INSTRUMENTS NOT SEALED BY THE UNDERSIGNED PROFESSIONAL RELATING TO OR INTENDED TO BE USED FOR ANY PART OR PARTS OF THE PROJECT TO WHICH THIS PAGE REFERS.

ADVANCE WARNING RAIL SYSTEM

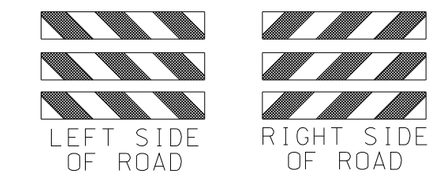

NOTES:

ANY EXISTING SIGNING THAT CONFLICTS WITH THE TRAFFIC CONTROL SIGNING SHALL BE COMPLETELY COVERED OR REMOVED.

SEE BEGIN/END OF PROJECT SIGNING SHEET FOR ADDITIONAL SIGNS.

(1) SIGN (43) REQUIRED WHEN RAMP WIDTH IS REDUCED.
(2) FIVE DEVICE MINIMUM.
(3) FOR WORK ZONES WHERE DEVICES ARE IN PLACE OVERNIGHT, USE TRIM-LINE CHANNELIZERS.

NOTE:
TEMPORARY TRAFFIC CONTROL SHOWN FOR INFORMATIONAL USE ONLY. SEE COMBINATION PROJECT J6I3131 FOR ACTUAL QUANTITIES AND PAY TOTALS.

TRAFFIC CONTROL LEGEND

- SIGN (SINGLE SIDED)
- SIGN (DOUBLE SIDED)
- FLAGGER
- DIRECTIONAL INDICATOR BARRICADE
- CHANNELIZER (TRIM-LINE)
- BARRICADE
- CHANGEABLE MESSAGE SIGN
- FLASHING ARROW PANEL

NOT TO SCALE

STATE OF MISSOURI
SHIRLEY J. NORRIS
NUMBER PE-28779
PROFESSIONAL ENGINEER

THIS SHEET HAS BEEN SIGNED, SEALED AND DATED ELECTRONICALLY.

DATE PREPARED	
9/29/2016	
ROUTE I-55	STATE MO
DISTRICT SL	SHEET NO. 40
COUNTY JEFFERSON	
JOB NO. J6I3110	
CONTRACT ID.	
PROJECT NO.	
BRIDGE NO.	

DATE	DESCRIPTION

IF A SEAL IS PRESENT ON THIS SHEET IT HAS BEEN ELECTRONICALLY SEALED AND DATED.

MISSOURI HIGHWAYS AND TRANSPORTATION COMMISSION
105 WEST CAPITOL
JEFFERSON CITY, MO 65102
1-888-ASK-MODOT (1-888-275-6636)

TRAFFIC CONTROL

LANE CLOSURE
EXIT RAMP AREAS

SHEET 4 OF 6

TEMPORARY TRAFFIC CONTROL FOR INFORMATION USE ONLY AND TO BE PAID FOR ON COMBINATION PROJECT J6I3131.

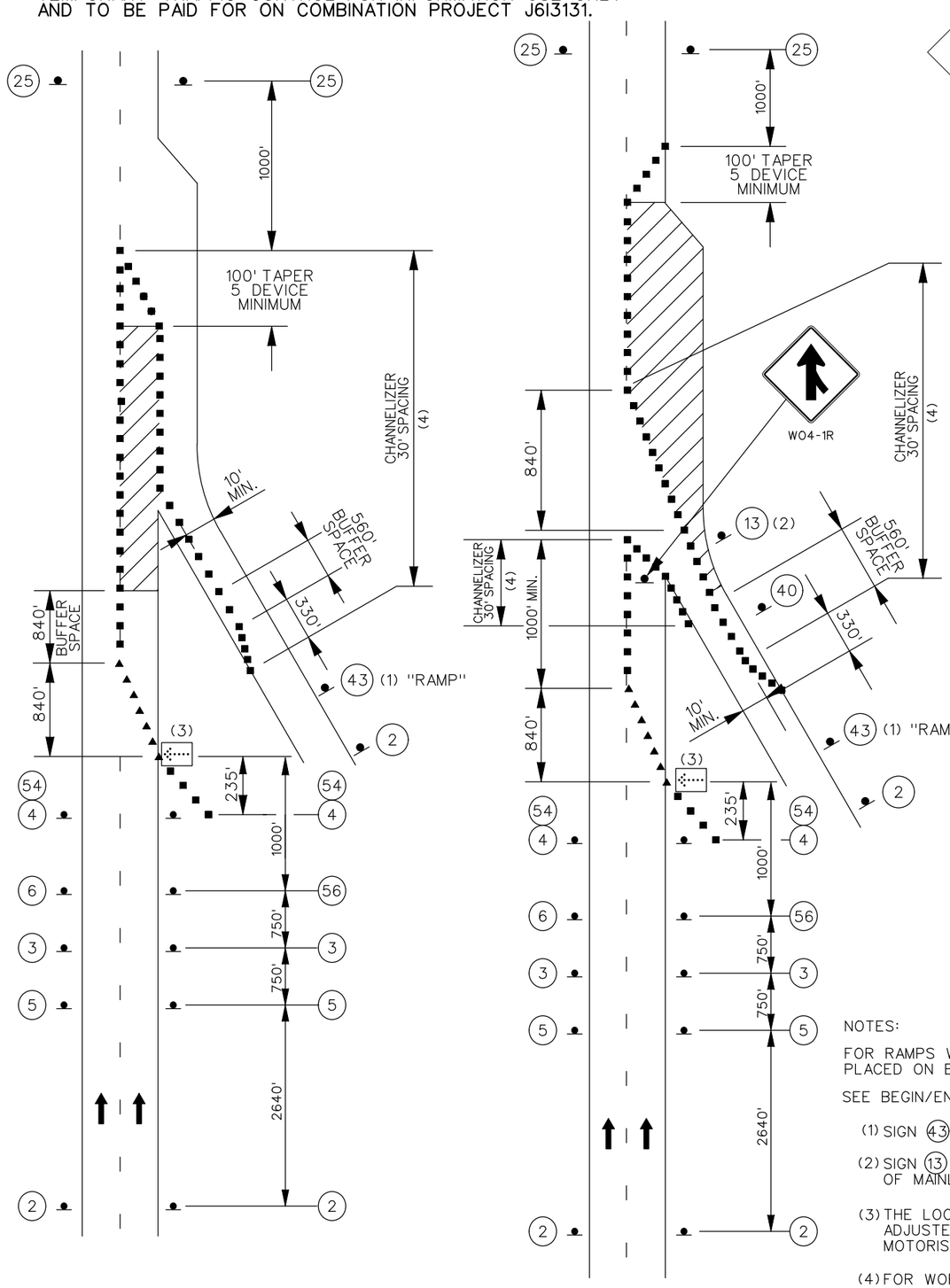

LANE CLOSURE ENTRANCE RAMP AREAS

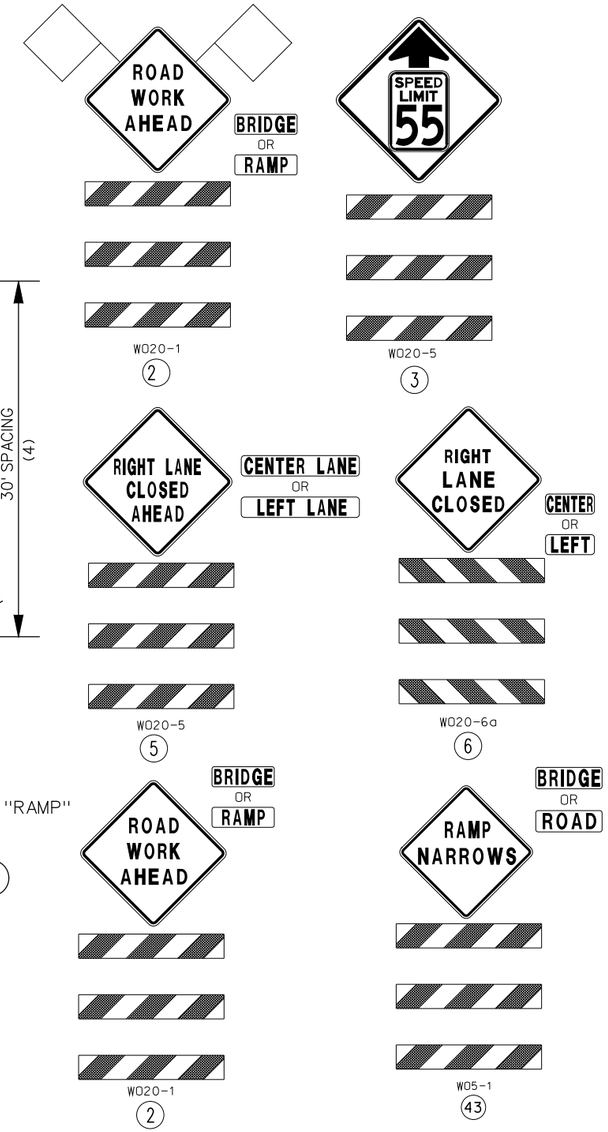

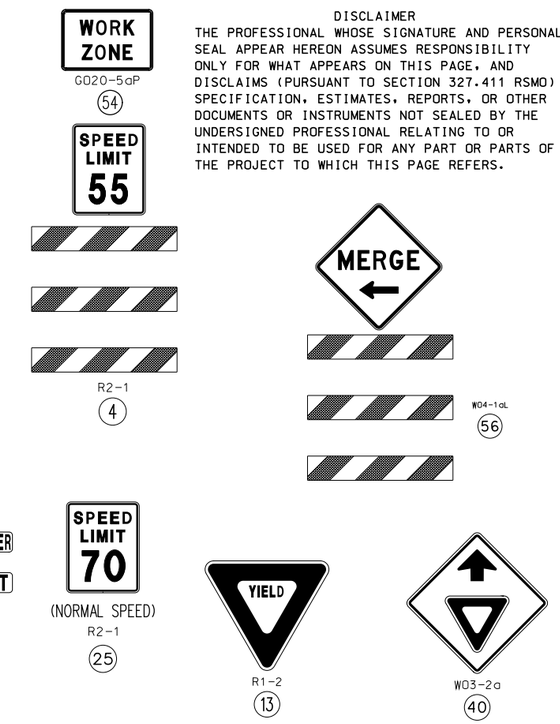

DISCLAIMER

THE PROFESSIONAL WHOSE SIGNATURE AND PERSONAL SEAL APPEAR HEREON ASSUMES RESPONSIBILITY ONLY FOR WHAT APPEARS ON THIS PAGE, AND DISCLAIMS (PURSUANT TO SECTION 327.411 RSMO) SPECIFICATION, ESTIMATES, REPORTS, OR OTHER DOCUMENTS OR INSTRUMENTS NOT SEALED BY THE UNDERSIGNED PROFESSIONAL RELATING TO OR INTENDED TO BE USED FOR ANY PART OR PARTS OF THE PROJECT TO WHICH THIS PAGE REFERS.

TRAFFIC CONTROL LEGEND

- SIGN (SINGLE SIDED)
- SIGN (DOUBLE SIDED)
- FLAGGER
- DIRECTIONAL INDICATOR BARRICADE
- CHANNELIZER (TRIM-LINE)
- BARRICADE
- CHANGEABLE MESSAGE SIGN
- FLASHING ARROW PANEL

NOTES:

FOR RAMPS WITH SHARP CURVES OR MULTIPLE LANES, RAMP SIGNS MAY BE PLACED ON BOTH SIDES OF THE RAMP.

SEE BEGIN/END OF PROJECT SIGNING SHEET FOR ADDITIONAL SIGNS.

(1) SIGN (43) REQUIRED WHEN RAMP WIDTH IS REDUCED.

(2) SIGN (13) SHOULD BE PLACED ON THE RAMP TO PROVIDE ADEQUATE VISIBILITY OF MAINLINE TRAFFIC.

(3) THE LOCATION OF THE SIGN SEQUENCE AND MERGE TAPER SHOULD BE ADJUSTED SO THAT THE ARROW PANEL LOCATION IS NOT CONFUSING TO MOTORISTS ON THE RAMP.

(4) FOR WORK ZONES WHERE DEVICES ARE IN PLACE OVERNIGHT, USE TRIM-LINE CHANNELIZERS.

NOT TO SCALE

NOTE:
TEMPORARY TRAFFIC CONTROL SHOWN FOR INFORMATIONAL USE ONLY. SEE COMBINATION PROJECT J6I3131 FOR ACTUAL QUANTITIES AND PAY TOTALS.

STATE OF MISSOURI
SHIRLEY J. NORRIS
NUMBER PE-28779
PROFESSIONAL ENGINEER
THIS SHEET HAS BEEN SIGNED, SEALED AND DATED ELECTRONICALLY.

DATE PREPARED	
9/29/2016	
ROUTE	STATE
I-55	MO
DISTRICT	SHEET NO.
SL	41
COUNTY	
JEFFERSON	
JOB NO.	
J6I3110	
CONTRACT ID.	
PROJECT NO.	
BRIDGE NO.	

DATE	DESCRIPTION

IF A SEAL IS PRESENT ON THIS SHEET IT HAS BEEN ELECTRONICALLY SEALED AND DATED.

MISSOURI HIGHWAYS AND TRANSPORTATION COMMISSION
105 WEST CAPITOL
JEFFERSON CITY, MO 65102
1-888-ASK-MODOT (1-888-275-6636)

TRAFFIC CONTROL

LANE CLOSURE
ENTRANCE RAMP AREAS

SHEET 5 OF 6

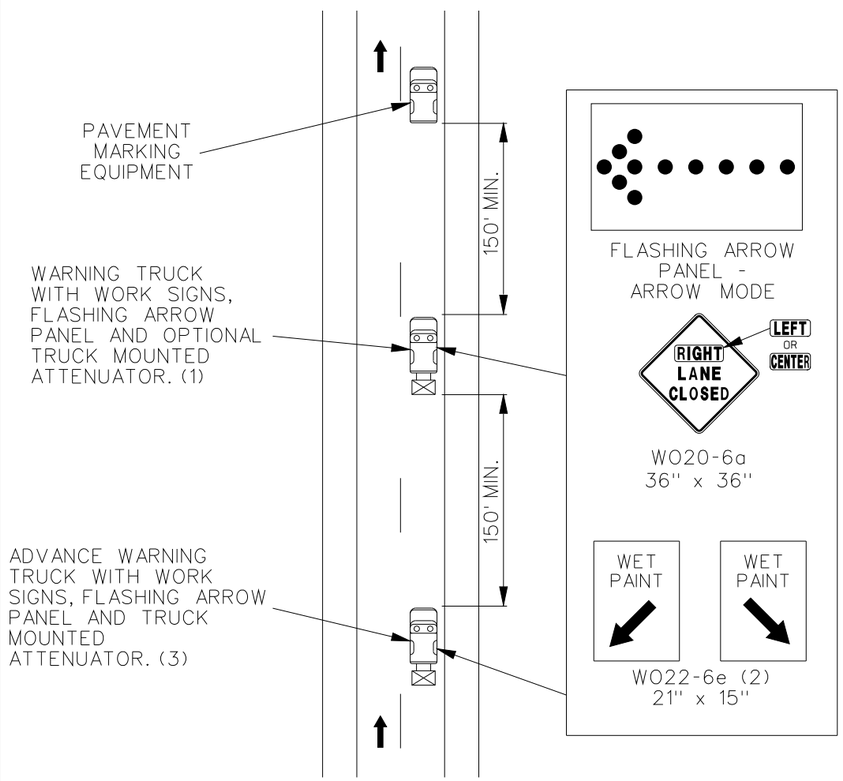

Multi-Lane Divided Highway

Moving Operation On Highway Open To Traffic Pavement Marking

(1) TRUCK IS OPTIONAL ON TWO-LANE UNDIVIDED HIGHWAYS IF SIGNING AND ARROW BOARD IS MOUNTED ON THE PAVEMENT MARKING EQUIPMENT.

(2) WET PAINT SIGNS ARE INSTALLED TO INDICATE THE SIDE IN WHICH THE PAVEMENT MARKING MATERIAL IS BEING APPLIED. AT THE CONTRACTOR'S OPTION, A FRONT FACING WET PAINT SIGN MAY BE INSTALLED ON THE LEFT SIDE OF THE PAVEMENT MARKING EQUIPMENT.

(3) ADVANCE WARNING TRUCK IS POSITIONED AT THE NO TRACK POINT OF THE PAVEMENT MARKING MATERIAL OR SPACING SHOWN, WHICHEVER IS GREATER.

NOT TO SCALE

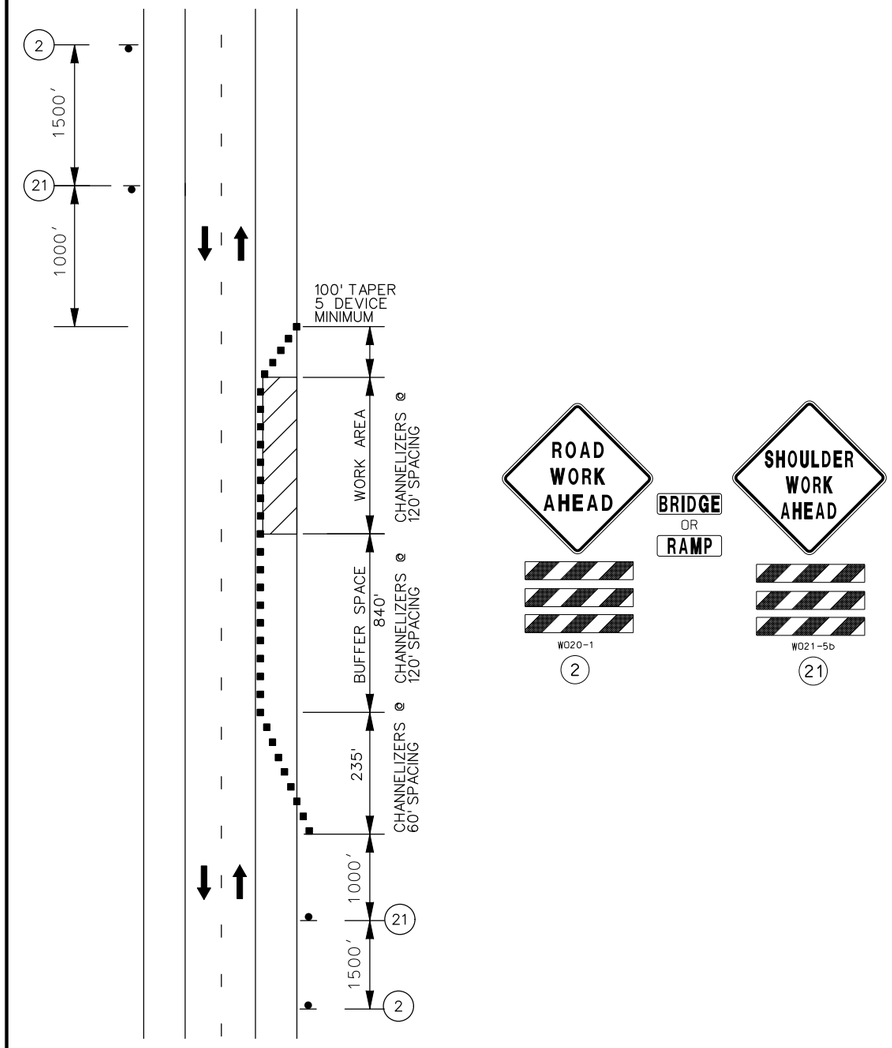

WORK ON THE SHOULDER ON DIVIDED AND UNDIVIDED HIGHWAYS

TRAFFIC CONTROL LEGEND

- SIGN (SINGLE SIDED)
- CHANNELIZER (TRIM-LINE)
- WORK AREA

NOTES:

PROVIDE SIGNS ON LEFT AND RIGHT SIDES OF DIVIDED HIGHWAYS.

ROAD WORK AHEAD SIGN NOT NEEDED IF SHOULDER WORK IS LOCATED WITHIN THE LIMITS OF AN ACTIVITY AREA WHERE ANOTHER ROAD WORK AHEAD SIGN IS ALREADY USED.

SEE EPG 616.12 WORK ZONE SPEED LIMITS FOR SPEED LIMIT GUIDELINES.

VEHICLE HAZARD WARNING SIGNALS SHALL NOT BE USED INSTEAD OF THE VEHICLE'S ROTATING LIGHTS OR STROBE LIGHTS.

WHEN PAVED SHOULDERS HAVING A WIDTH OF 8 FEET OR MORE ARE CLOSED, AT LEAST ONE ADVANCE WARNING SIGN SHALL BE USED. IN ADDITION, CHANNELIZING DEVICES SHALL BE USED TO CLOSE THE SHOULDER IN ADVANCE TO DELINEATE THE BEGINNING OF THE WORK SPACE AND DIRECT VEHICULAR TRAFFIC TO REMAIN WITHIN THE TRAVELED WAY.

NOT TO SCALE

DISCLAIMER
THE PROFESSIONAL WHOSE SIGNATURE AND PERSONAL SEAL APPEAR HEREON ASSUMES RESPONSIBILITY ONLY FOR WHAT APPEARS ON THIS PAGE, AND DISCLAIMS (PURSUANT TO SECTION 327.411 RSMO) SPECIFICATION, ESTIMATES, REPORTS, OR OTHER DOCUMENTS OR INSTRUMENTS NOT SEALED BY THE UNDERSIGNED PROFESSIONAL RELATING TO OR INTENDED TO BE USED FOR ANY PART OR PARTS OF THE PROJECT TO WHICH THIS PAGE REFERS.

STATE OF MISSOURI
SHIRLEY J. NORRIS
NUMBER PE-28779
PROFESSIONAL ENGINEER

THIS SHEET HAS BEEN SIGNED, SEALED AND DATED ELECTRONICALLY.

DATE PREPARED	9/29/2016
ROUTE	I-55
STATE	MO
DISTRICT	SL
SHEET NO.	42
COUNTY	JEFFERSON
JOB NO.	J6I3110
CONTRACT ID.	
PROJECT NO.	
BRIDGE NO.	

DATE	DESCRIPTION

IF A SEAL IS PRESENT ON THIS SHEET IT HAS BEEN ELECTRONICALLY SEALED AND DATED.

MISSOURI HIGHWAYS AND TRANSPORTATION COMMISSION
MoDOT
105 WEST CAPITOL
JEFFERSON CITY, MO 65102
1-888-ASK-MODOT (1-888-275-6636)

TRAFFIC CONTROL

PAVEMENT MARKING TCP & WORK ON SHOULDER TCP

SHEET 6 OF 6

DISCLAIMER
THE PROFESSIONAL WHOSE SIGNATURE AND PERSONAL SEAL APPEAR HEREON ASSUMES RESPONSIBILITY ONLY FOR WHAT APPEARS ON THIS PAGE, AND DISCLAIMS (PURSUANT TO SECTION 327.411 RSMO) SPECIFICATION, ESTIMATES, REPORTS, OR OTHER DOCUMENTS OR INSTRUMENTS NOT SEALED BY THE UNDERSIGNED PROFESSIONAL RELATING TO OR INTENDED TO BE USED FOR ANY PART OR PARTS OF THE PROJECT TO WHICH THIS PAGE REFERS.

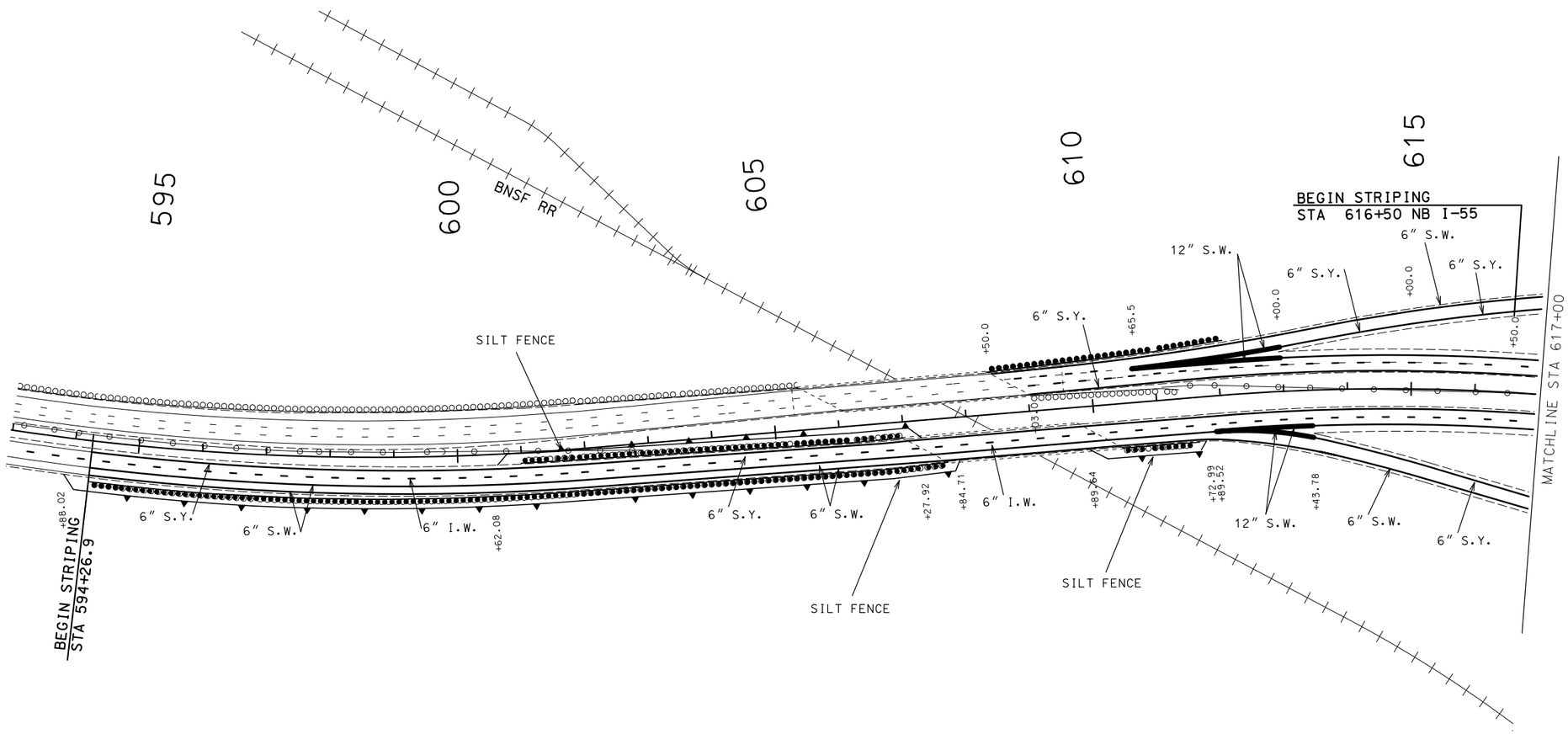

STRIPING LEGEND

6" S.W.	SOLID WHITE PAINT
6" I.W.	INTERMITTENT WHITE PAINT
12" S.W.	SOLID WHITE PAINT (GORE)
6" S.Y.	SOLID YELLOW PAINT

(ALL PAINT TO BE HIGH BUILD WATERBORNE PAVEMENT MARKING PAINT-TYPE L BEADS)

EROSION CONTROL LEGEND

SILT FENCE

SCALE
0 100 200 300 400 500

THE EXISTENCE AND APPROXIMATE LOCATION OF UTILITY FACILITIES KNOWN TO EXIST, AS SHOWN ON THE PLANS, ARE BASED ON THE BEST INFORMATION AVAILABLE TO THE COMMISSION AT THIS TIME. THIS INFORMATION IS PROVIDED BY THE COMMISSION "AS-IS" AND THE COMMISSION EXPRESSLY DISCLAIMS ANY REPRESENTATION OR WARRANTY AS TO THE COMPLETENESS, ACCURACY, OR SUITABILITY OF THE INFORMATION FOR ANY USE. RELIANCE UPON THIS INFORMATION IS DONE AT THE RISK AND PERIL OF THE USER, AND THE COMMISSION SHALL NOT BE LIABLE FOR ANY DAMAGES THAT MAY ARISE FROM ANY ERROR IN THE INFORMATION.

STATE OF MISSOURI
SHIRLEY J. NORRIS
NUMBER PE-28779
PROFESSIONAL ENGINEER
THIS SHEET HAS BEEN SIGNED, SEALED AND DATED ELECTRONICALLY.

DATE PREPARED	9/29/2016
ROUTE	I-55
STATE	MO
DISTRICT	SL
SHEET NO.	43
COUNTY	JEFFERSON
JOB NO.	J6I3110
CONTRACT ID.	
PROJECT NO.	
BRIDGE NO.	

DATE	DESCRIPTION

MISSOURI HIGHWAYS AND TRANSPORTATION COMMISSION
105 WEST CAPITOL
JEFFERSON CITY, MO 65102
1-888-ASK-MODOT (1-888-275-6636)

PAVEMENT MARKING & EROSION CONTROL
SHEET 1 OF 33

IF A SEAL IS PRESENT ON THIS SHEET IT HAS BEEN ELECTRONICALLY SEALED AND DATED.

DISCLAIMER
THE PROFESSIONAL WHOSE SIGNATURE AND PERSONAL SEAL APPEAR HEREON ASSUMES RESPONSIBILITY ONLY FOR WHAT APPEARS ON THIS PAGE, AND DISCLAIMS (PURSUANT TO SECTION 327.411 RSMO) SPECIFICATION, ESTIMATES, REPORTS, OR OTHER DOCUMENTS OR INSTRUMENTS NOT SEALED BY THE UNDERSIGNED PROFESSIONAL RELATING TO OR INTENDED TO BE USED FOR ANY PART OR PARTS OF THE PROJECT TO WHICH THIS PAGE REFERS.

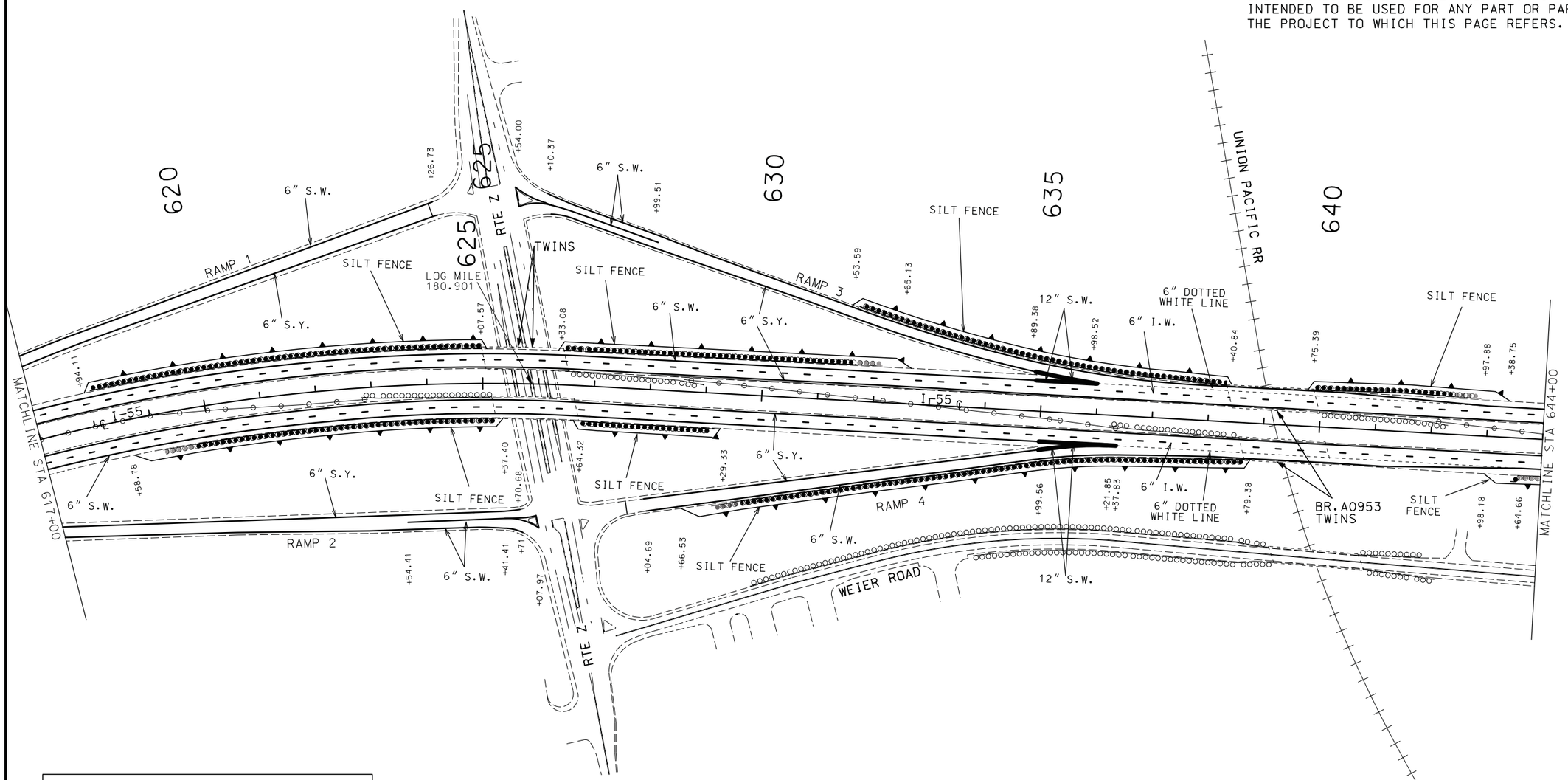

STRIPING LEGEND

———	6" S.W.	SOLID WHITE PAINT
- - - -	6" I.W.	INTERMITTENT WHITE PAINT
▬▬▬	12" S.W.	SOLID WHITE PAINT (GORE)
———	6" S.Y.	SOLID YELLOW PAINT
- - - - - -	6" D.W.L.	DOTTED WHITE LINE PAINT

(ALL PAINT TO BE HIGH BUILD WATERBORNE PAVEMENT MARKING PAINT-TYPE L BEADS)

EROSION CONTROL LEGEND

SILT FENCE

SCALE

0 100 200 300 400 500

STATE OF MISSOURI
SHIRLEY J. NORRIS
NUMBER PE-28779
PROFESSIONAL ENGINEER

THIS SHEET HAS BEEN SIGNED, SEALED AND DATED ELECTRONICALLY.

DATE PREPARED	9/29/2016
ROUTE	I-55
STATE	MO
DISTRICT	SL
SHEET NO.	44
COUNTY	JEFFERSON
JOB NO.	J6I3110
CONTRACT ID.	
PROJECT NO.	
BRIDGE NO.	

DESCRIPTION

DATE

MISSOURI HIGHWAYS AND TRANSPORTATION COMMISSION

105 WEST CAPITOL
JEFFERSON CITY, MO 65102
1-888-ASK-MODOT (1-888-275-6636)

PAVEMENT MARKING & EROSION CONTROL SHEET 2 OF 33

IF A SEAL IS PRESENT ON THIS SHEET IT HAS BEEN ELECTRONICALLY SEALED AND DATED.

DISCLAIMER
THE PROFESSIONAL WHOSE SIGNATURE AND PERSONAL SEAL APPEAR HEREON ASSUMES RESPONSIBILITY ONLY FOR WHAT APPEARS ON THIS PAGE, AND DISCLAIMS (PURSUANT TO SECTION 327.411 RSMO) SPECIFICATION, ESTIMATES, REPORTS, OR OTHER DOCUMENTS OR INSTRUMENTS NOT SEALED BY THE UNDERSIGNED PROFESSIONAL RELATING TO OR INTENDED TO BE USED FOR ANY PART OR PARTS OF THE PROJECT TO WHICH THIS PAGE REFERS.

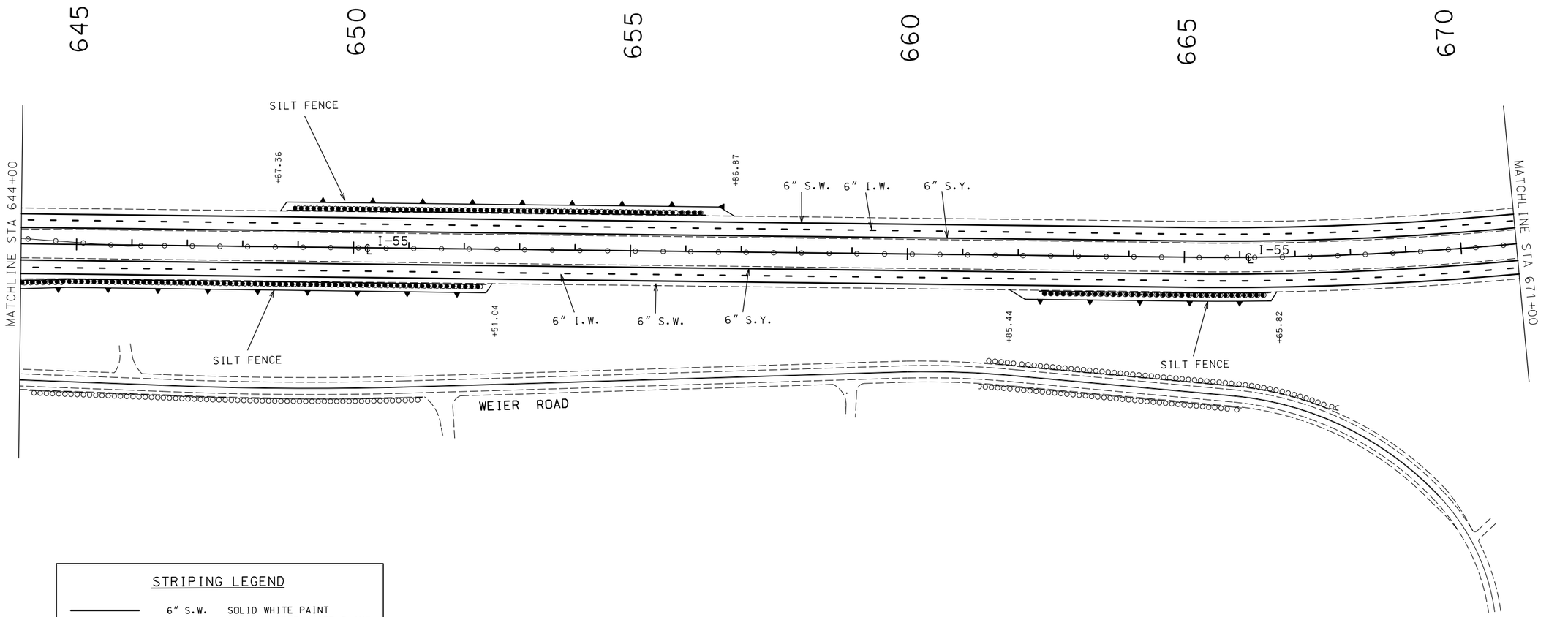

STRIPING LEGEND

———	6" S.W.	SOLID WHITE PAINT
- - - -	6" I.W.	INTERMITTENT WHITE PAINT
▬▬▬	12" S.W.	SOLID WHITE PAINT (GORE)
———	6" S.Y.	SOLID YELLOW PAINT
- - - -	6" D.W.L.	DOTTED WHITE LINE PAINT

(ALL PAINT TO BE HIGH BUILD WATERBORNE PAVEMENT MARKING PAINT-TYPE L BEADS)

EROSION CONTROL LEGEND

▼——▼ SILT FENCE

SCALE

0 100 200 300 400 500

STATE OF MISSOURI
SHIRLEY J. NORRIS
NUMBER PE-28779
PROFESSIONAL ENGINEER

THIS SHEET HAS BEEN SIGNED, SEALED AND DATED ELECTRONICALLY.

DATE PREPARED	9/29/2016
ROUTE	I-55
STATE	MO
DISTRICT	SL
SHEET NO.	45
COUNTY	JEFFERSON
JOB NO.	J6I3110
CONTRACT ID.	
PROJECT NO.	
BRIDGE NO.	

DATE	DESCRIPTION

IF A SEAL IS PRESENT ON THIS SHEET IT HAS BEEN ELECTRONICALLY SEALED AND DATED.

MISSOURI HIGHWAYS AND TRANSPORTATION COMMISSION

105 WEST CAPITOL
JEFFERSON CITY, MO 65102
1-888-ASK-MODOT (1-888-275-6636)

PAVEMENT MARKING & EROSION CONTROL SHEET 3 OF 33

DISCLAIMER
THE PROFESSIONAL WHOSE SIGNATURE AND PERSONAL SEAL APPEAR HEREON ASSUMES RESPONSIBILITY ONLY FOR WHAT APPEARS ON THIS PAGE, AND DISCLAIMS (PURSUANT TO SECTION 327.411 RSMO) SPECIFICATION, ESTIMATES, REPORTS, OR OTHER DOCUMENTS OR INSTRUMENTS NOT SEALED BY THE UNDERSIGNED PROFESSIONAL RELATING TO OR INTENDED TO BE USED FOR ANY PART OR PARTS OF THE PROJECT TO WHICH THIS PAGE REFERS.

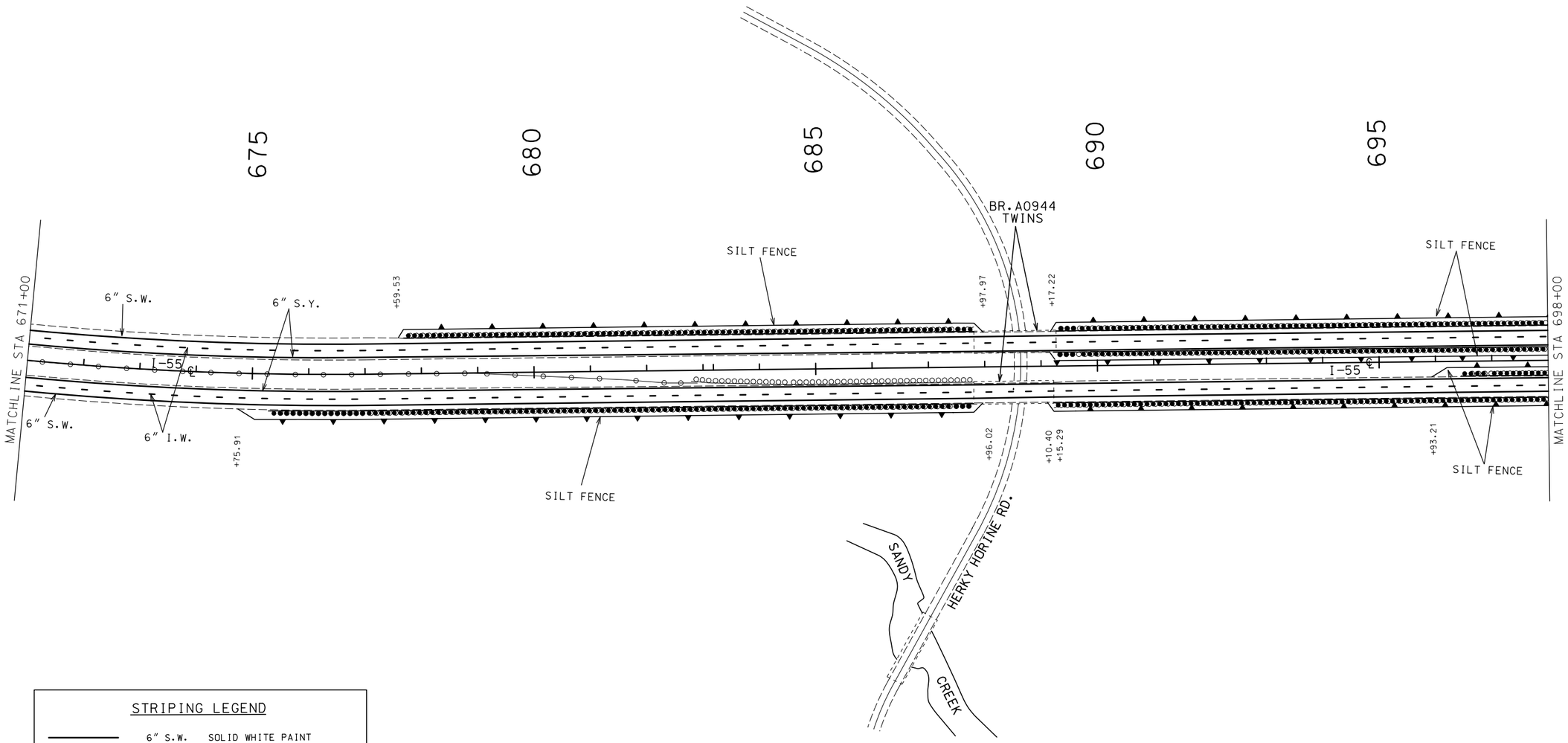

STRIPING LEGEND

———	6" S.W.	SOLID WHITE PAINT
- - - -	6" I.W.	INTERMITTENT WHITE PAINT
▬▬▬	12" S.W.	SOLID WHITE PAINT (GORE)
———	6" S.Y.	SOLID YELLOW PAINT

(ALL PAINT TO BE HIGH BUILD WATERBORNE PAVEMENT MARKING PAINT-TYPE L BEADS)

EROSION CONTROL LEGEND

▼——▼ SILT FENCE

SCALE

0 100 200 300 400 500

STATE OF MISSOURI
SHIRLEY J. NORRIS
NUMBER PE-28779
PROFESSIONAL ENGINEER

THIS SHEET HAS BEEN SIGNED, SEALED AND DATED ELECTRONICALLY.

DATE PREPARED	9/29/2016
ROUTE	I-55
STATE	MO
DISTRICT	SL
SHEET NO.	46
COUNTY	JEFFERSON
JOB NO.	J6I3110
CONTRACT ID.	
PROJECT NO.	
BRIDGE NO.	

DESCRIPTION	DATE

MISSOURI HIGHWAYS AND TRANSPORTATION COMMISSION

105 WEST CAPITOL
JEFFERSON CITY, MO 65102
1-888-ASK-MODOT (1-888-275-6636)

PAVEMENT MARKING & EROSION CONTROL
SHEET 4 OF 33

IF A SEAL IS PRESENT ON THIS SHEET IT HAS BEEN ELECTRONICALLY SEALED AND DATED.

DISCLAIMER
THE PROFESSIONAL WHOSE SIGNATURE AND PERSONAL SEAL APPEAR HEREON ASSUMES RESPONSIBILITY ONLY FOR WHAT APPEARS ON THIS PAGE, AND DISCLAIMS (PURSUANT TO SECTION 327.411 RSMO) SPECIFICATION, ESTIMATES, REPORTS, OR OTHER DOCUMENTS OR INSTRUMENTS NOT SEALED BY THE UNDERSIGNED PROFESSIONAL RELATING TO OR INTENDED TO BE USED FOR ANY PART OR PARTS OF THE PROJECT TO WHICH THIS PAGE REFERS.

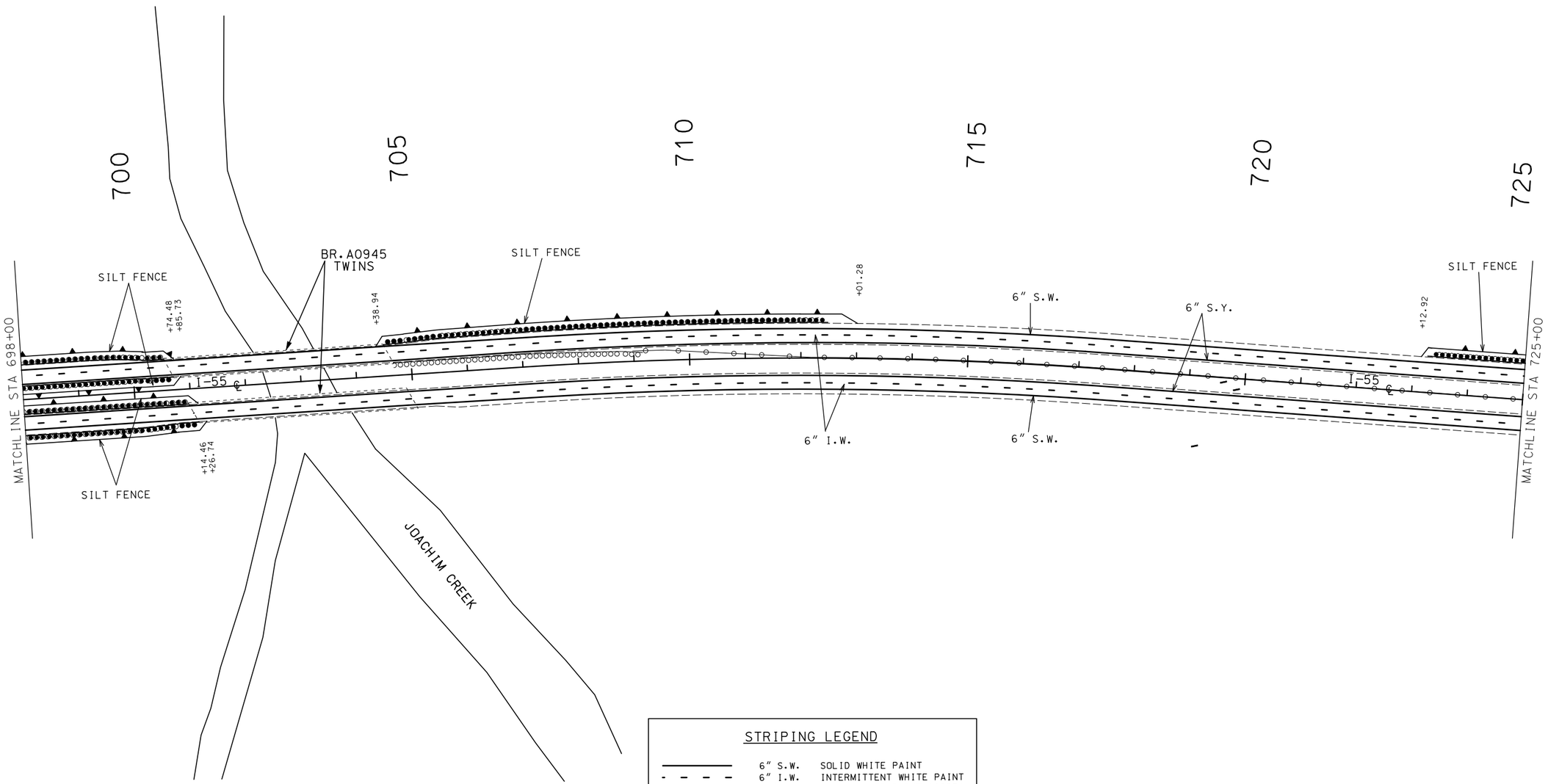

STRIPING LEGEND

———	6" S.W.	SOLID WHITE PAINT
- - - -	6" I.W.	INTERMITTENT WHITE PAINT
▬▬▬	12" S.W.	SOLID WHITE PAINT (GORE)
———	6" S.Y.	SOLID YELLOW PAINT

(ALL PAINT TO BE HIGH BUILD WATERBORNE PAVEMENT MARKING PAINT-TYPE L BEADS)

EROSION CONTROL LEGEND

SILT FENCE

SCALE

0 100 200 300 400 500

STATE OF MISSOURI
SHIRLEY J. NORRIS
NUMBER PE-28779
PROFESSIONAL ENGINEER

THIS SHEET HAS BEEN SIGNED, SEALED AND DATED ELECTRONICALLY.

DATE PREPARED	9/29/2016
ROUTE	I-55
STATE	MO
DISTRICT	SL
SHEET NO.	47
COUNTY	JEFFERSON
JOB NO.	J6I3110
CONTRACT ID.	
PROJECT NO.	
BRIDGE NO.	

DATE	DESCRIPTION

MISSOURI HIGHWAYS AND TRANSPORTATION COMMISSION

105 WEST CAPITOL
JEFFERSON CITY, MO 65102
1-888-ASK-MODOT (1-888-275-6636)

PAVEMENT MARKING & EROSION CONTROL SHEET 5 OF 33

IF A SEAL IS PRESENT ON THIS SHEET IT HAS BEEN ELECTRONICALLY SEALED AND DATED.

DISCLAIMER
THE PROFESSIONAL WHOSE SIGNATURE AND PERSONAL SEAL APPEAR HEREON ASSUMES RESPONSIBILITY ONLY FOR WHAT APPEARS ON THIS PAGE, AND DISCLAIMS (PURSUANT TO SECTION 327.411 RSMO) SPECIFICATION, ESTIMATES, REPORTS, OR OTHER DOCUMENTS OR INSTRUMENTS NOT SEALED BY THE UNDERSIGNED PROFESSIONAL RELATING TO OR INTENDED TO BE USED FOR ANY PART OR PARTS OF THE PROJECT TO WHICH THIS PAGE REFERS.

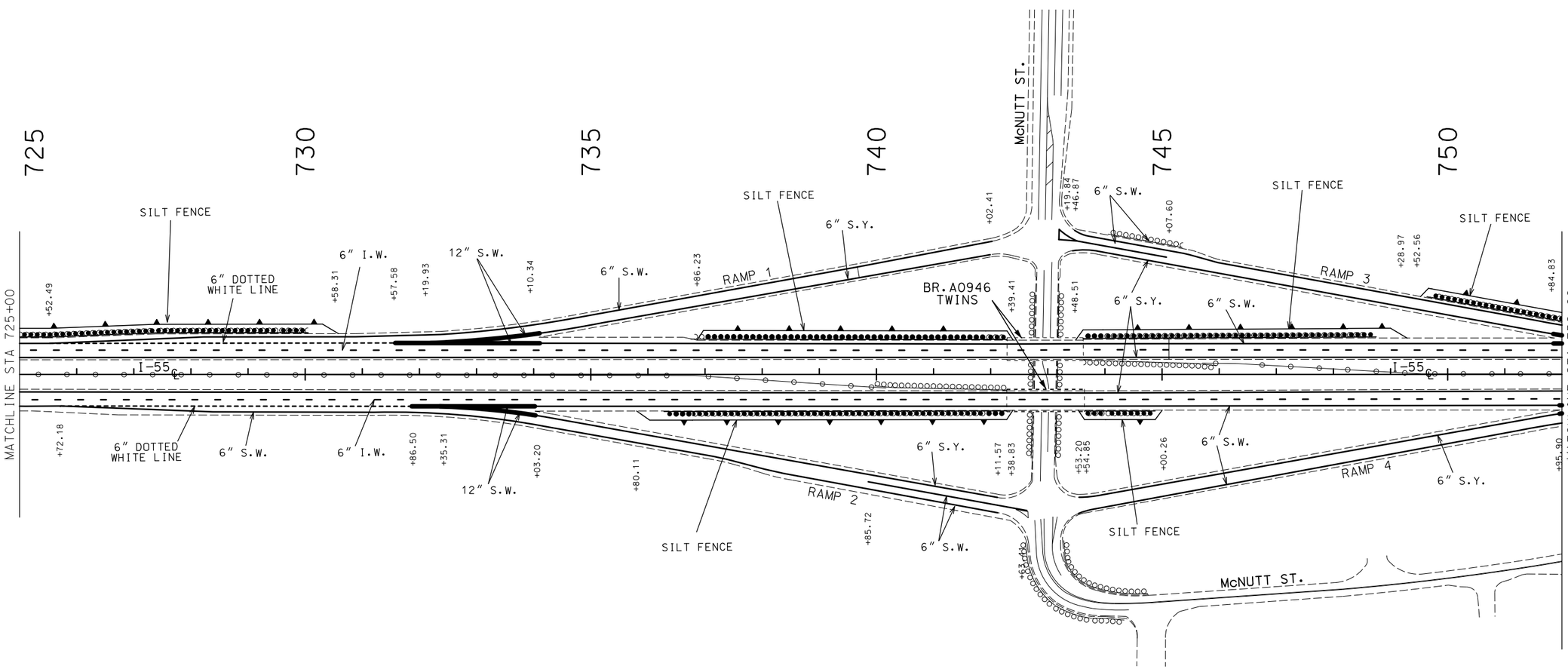

STRIPING LEGEND

———	6" S.W.	SOLID WHITE PAINT
- - - -	6" I.W.	INTERMITTENT WHITE PAINT
▬▬▬	12" S.W.	SOLID WHITE PAINT (GORE)
———	6" S.Y.	SOLID YELLOW PAINT
- - - - - -	6" D.W.L.	DOTTED WHITE LINE PAINT

(ALL PAINT TO BE HIGH BUILD WATERBORNE PAVEMENT MARKING PAINT-TYPE L BEADS)

EROSION CONTROL LEGEND

SILT FENCE

SCALE

0 100 200 300 400 500

STATE OF MISSOURI
SHIRLEY J. NORRIS
NUMBER PE-28779
PROFESSIONAL ENGINEER

THIS SHEET HAS BEEN SIGNED, SEALED AND DATED ELECTRONICALLY.

DATE PREPARED	9/29/2016
ROUTE	I-55
STATE	MO
DISTRICT	SL
SHEET NO.	48
COUNTY	JEFFERSON
JOB NO.	J6I3110
CONTRACT ID.	
PROJECT NO.	
BRIDGE NO.	

DATE	DESCRIPTION

IF A SEAL IS PRESENT ON THIS SHEET IT HAS BEEN ELECTRONICALLY SEALED AND DATED.

MISSOURI HIGHWAYS AND TRANSPORTATION COMMISSION
105 WEST CAPITOL
JEFFERSON CITY, MO 65102
1-888-ASK-MODOT (1-888-275-6636)

PAVEMENT MARKING & EROSION CONTROL
SHEET 6 OF 33

DISCLAIMER
THE PROFESSIONAL WHOSE SIGNATURE AND PERSONAL SEAL APPEAR HEREON ASSUMES RESPONSIBILITY ONLY FOR WHAT APPEARS ON THIS PAGE, AND DISCLAIMS (PURSUANT TO SECTION 327.411 RSMO) SPECIFICATION, ESTIMATES, REPORTS, OR OTHER DOCUMENTS OR INSTRUMENTS NOT SEALED BY THE UNDERSIGNED PROFESSIONAL RELATING TO OR INTENDED TO BE USED FOR ANY PART OR PARTS OF THE PROJECT TO WHICH THIS PAGE REFERS.

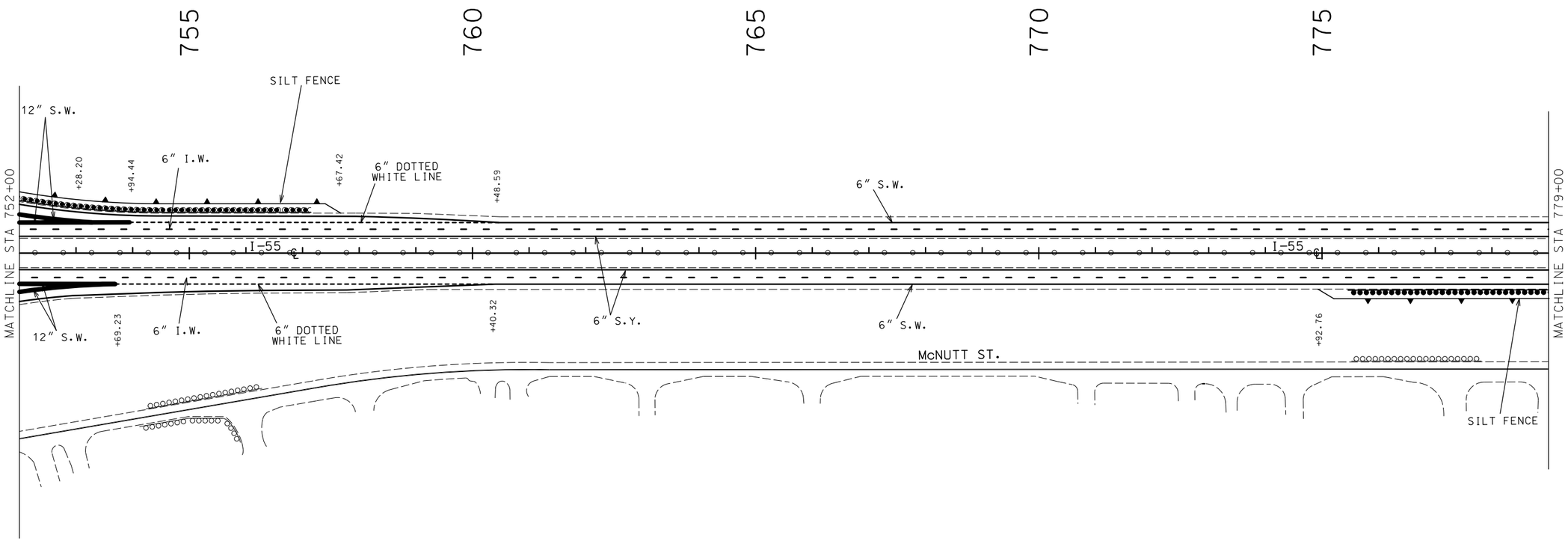

STRIPING LEGEND

———	6" S.W.	SOLID WHITE PAINT
- - - -	6" I.W.	INTERMITTENT WHITE PAINT
▬▬▬	12" S.W.	SOLID WHITE PAINT (GORE)
———	6" S.Y.	SOLID YELLOW PAINT
- - - - - -	6" D.W.L.	DOTTED WHITE LINE PAINT

(ALL PAINT TO BE HIGH BUILD WATERBORNE PAVEMENT MARKING PAINT-TYPE L BEADS)

EROSION CONTROL LEGEND

SILT FENCE

SCALE
0 100 200 300 400 500

STATE OF MISSOURI
SHIRLEY J. NORRIS
NUMBER PE-28779
PROFESSIONAL ENGINEER
THIS SHEET HAS BEEN SIGNED, SEALED AND DATED ELECTRONICALLY.

DATE PREPARED	9/29/2016
ROUTE	I-55
STATE	MO
DISTRICT	SL
SHEET NO.	49
COUNTY	JEFFERSON
JOB NO.	J6I3110
CONTRACT ID.	
PROJECT NO.	
BRIDGE NO.	

DATE	DESCRIPTION

MISSOURI HIGHWAYS AND TRANSPORTATION COMMISSION
105 WEST CAPITOL
JEFFERSON CITY, MO 65102
1-888-ASK-MODOT (1-888-275-6636)

PAVEMENT MARKING & EROSION CONTROL
SHEET 7 OF 33

IF A SEAL IS PRESENT ON THIS SHEET IT HAS BEEN ELECTRONICALLY SEALED AND DATED.

DISCLAIMER
THE PROFESSIONAL WHOSE SIGNATURE AND PERSONAL SEAL APPEAR HEREON ASSUMES RESPONSIBILITY ONLY FOR WHAT APPEARS ON THIS PAGE, AND DISCLAIMS (PURSUANT TO SECTION 327.411 RSMO) SPECIFICATION, ESTIMATES, REPORTS, OR OTHER DOCUMENTS OR INSTRUMENTS NOT SEALED BY THE UNDERSIGNED PROFESSIONAL RELATING TO OR INTENDED TO BE USED FOR ANY PART OR PARTS OF THE PROJECT TO WHICH THIS PAGE REFERS.

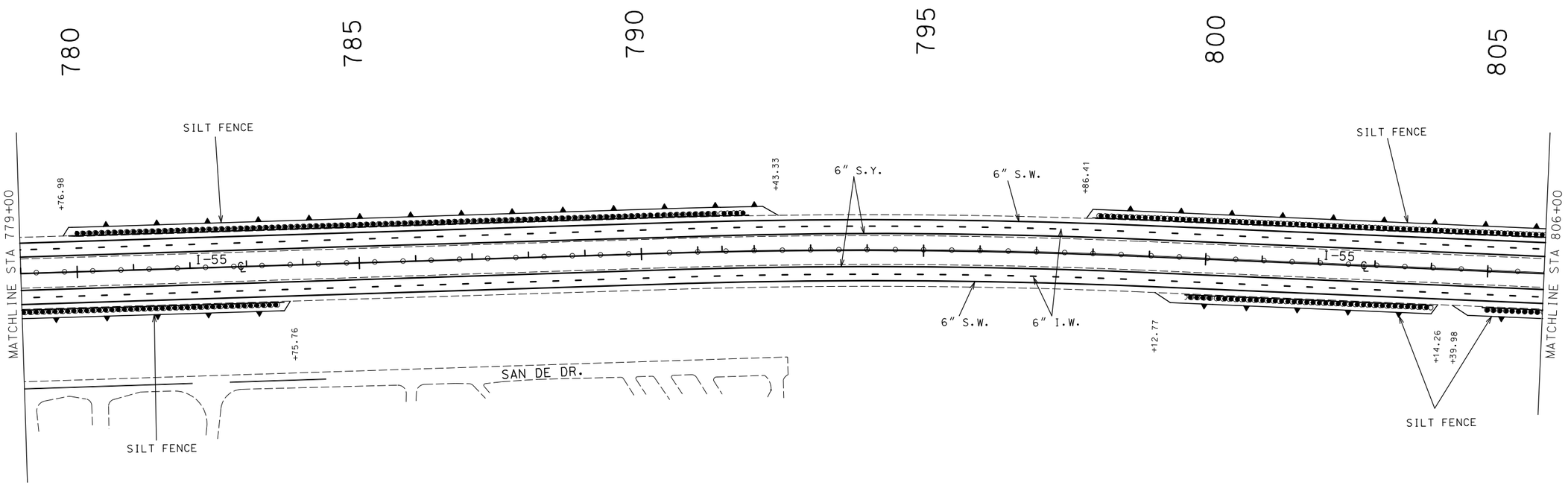

STRIPING LEGEND

6" S.W.	SOLID WHITE PAINT
6" I.W.	INTERMITTENT WHITE PAINT
12" S.W.	SOLID WHITE PAINT (GORE)
6" S.Y.	SOLID YELLOW PAINT

(ALL PAINT TO BE HIGH BUILD WATERBORNE PAVEMENT MARKING PAINT-TYPE L BEADS)

EROSION CONTROL LEGEND

SILT FENCE

SCALE

0 100 200 300 400 500

STATE OF MISSOURI
SHIRLEY J. NORRIS
NUMBER PE-28779
PROFESSIONAL ENGINEER

THIS SHEET HAS BEEN SIGNED, SEALED AND DATED ELECTRONICALLY.

DATE PREPARED	9/29/2016
ROUTE	I-55
STATE	MO
DISTRICT	SL
SHEET NO.	50
COUNTY	JEFFERSON
JOB NO.	J6I3110
CONTRACT ID.	
PROJECT NO.	
BRIDGE NO.	

DATE	DESCRIPTION

IF A SEAL IS PRESENT ON THIS SHEET IT HAS BEEN ELECTRONICALLY SEALED AND DATED.

MISSOURI HIGHWAYS AND TRANSPORTATION COMMISSION

105 WEST CAPITOL
JEFFERSON CITY, MO 65102
1-888-ASK-MODOT (1-888-275-6636)

PAVEMENT MARKING & EROSION CONTROL
SHEET 8 OF 33

DISCLAIMER
THE PROFESSIONAL WHOSE SIGNATURE AND PERSONAL SEAL APPEAR HEREON ASSUMES RESPONSIBILITY ONLY FOR WHAT APPEARS ON THIS PAGE, AND DISCLAIMS (PURSUANT TO SECTION 327.411 RSMO) SPECIFICATION, ESTIMATES, REPORTS, OR OTHER DOCUMENTS OR INSTRUMENTS NOT SEALED BY THE UNDERSIGNED PROFESSIONAL RELATING TO OR INTENDED TO BE USED FOR ANY PART OR PARTS OF THE PROJECT TO WHICH THIS PAGE REFERS.

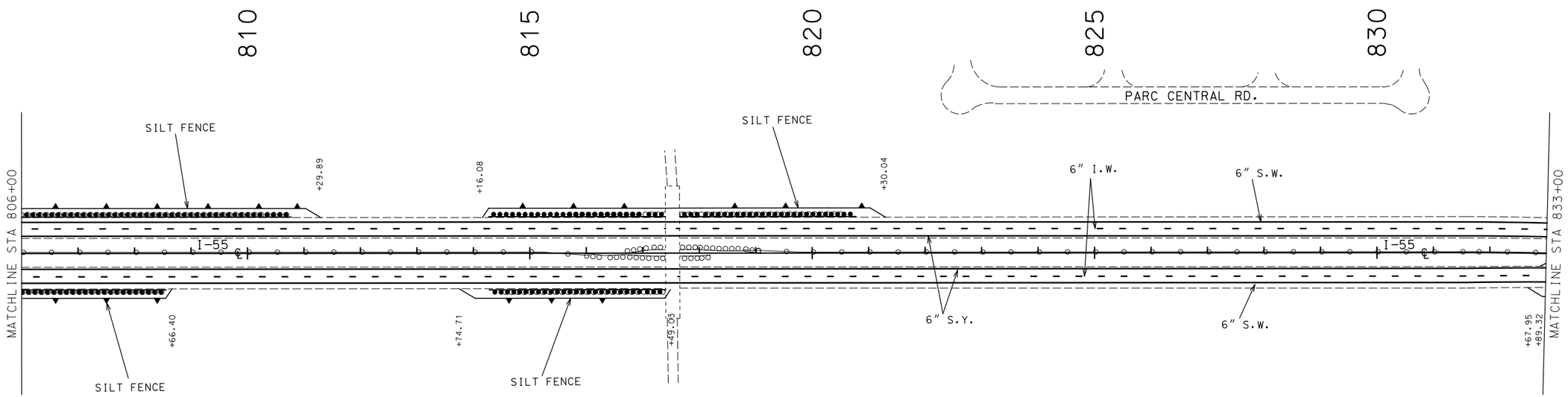

STRIPING LEGEND

———	6" S.W.	SOLID WHITE PAINT
- - - -	6" I.W.	INTERMITTENT WHITE PAINT
▬▬▬	12" S.W.	SOLID WHITE PAINT (GORE)
———	6" S.Y.	SOLID YELLOW PAINT

(ALL PAINT TO BE HIGH BUILD WATERBORNE PAVEMENT MARKING PAINT-TYPE L BEADS)

EROSION CONTROL LEGEND

SILT FENCE

SCALE

0 100 200 300 400 500

STATE OF MISSOURI
SHIRLEY J. NORRIS
NUMBER PE-28779
PROFESSIONAL ENGINEER

THIS SHEET HAS BEEN SIGNED, SEALED AND DATED ELECTRONICALLY.

DATE PREPARED	9/29/2016
ROUTE	I-55
STATE	MO
DISTRICT	SL
SHEET NO.	51
COUNTY	JEFFERSON
JOB NO.	J6I3110
CONTRACT ID.	
PROJECT NO.	
BRIDGE NO.	

DATE	DESCRIPTION

MISSOURI HIGHWAYS AND TRANSPORTATION COMMISSION

105 WEST CAPITOL
JEFFERSON CITY, MO 65102
1-888-ASK-MODOT (1-888-275-6636)

PAVEMENT MARKING & EROSION CONTROL
SHEET 9 OF 33

IF A SEAL IS PRESENT ON THIS SHEET IT HAS BEEN ELECTRONICALLY SEALED AND DATED.

DISCLAIMER
THE PROFESSIONAL WHOSE SIGNATURE AND PERSONAL SEAL APPEAR HEREON ASSUMES RESPONSIBILITY ONLY FOR WHAT APPEARS ON THIS PAGE, AND DISCLAIMS (PURSUANT TO SECTION 327.411 RSMO) SPECIFICATION, ESTIMATES, REPORTS, OR OTHER DOCUMENTS OR INSTRUMENTS NOT SEALED BY THE UNDERSIGNED PROFESSIONAL RELATING TO OR INTENDED TO BE USED FOR ANY PART OR PARTS OF THE PROJECT TO WHICH THIS PAGE REFERS.

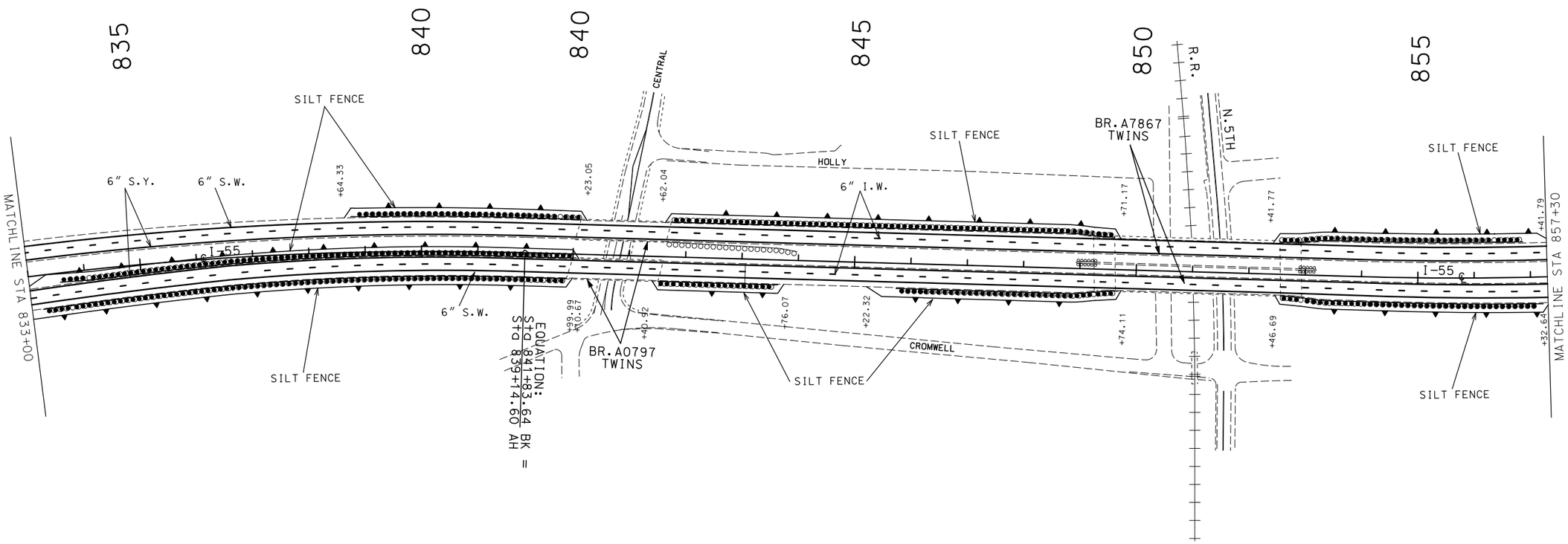

STRIPING LEGEND

———	6" S.W.	SOLID WHITE PAINT
- - - -	6" I.W.	INTERMITTENT WHITE PAINT
▬▬▬	12" S.W.	SOLID WHITE PAINT (GORE)
═══	6" S.Y.	SOLID YELLOW PAINT

(ALL PAINT TO BE HIGH BUILD WATERBORNE PAVEMENT MARKING PAINT-TYPE L BEADS)

EROSION CONTROL LEGEND

SILT FENCE

SCALE

0 100 200 300 400 500

STATE OF MISSOURI
SHIRLEY J. NORRIS
NUMBER PE-28779
PROFESSIONAL ENGINEER

THIS SHEET HAS BEEN SIGNED, SEALED AND DATED ELECTRONICALLY.

DATE PREPARED	9/29/2016
ROUTE	I-55
STATE	MO
DISTRICT	SL
SHEET NO.	52
COUNTY	JEFFERSON
JOB NO.	J6I3110
CONTRACT ID.	
PROJECT NO.	
BRIDGE NO.	

DATE	DESCRIPTION

IF A SEAL IS PRESENT ON THIS SHEET IT HAS BEEN ELECTRONICALLY SEALED AND DATED.

MISSOURI HIGHWAYS AND TRANSPORTATION COMMISSION

105 WEST CAPITOL
JEFFERSON CITY, MO 65102
1-888-ASK-MODOT (1-888-275-6636)

PAVEMENT MARKING & EROSION CONTROL
SHEET 10 OF 33

DISCLAIMER
THE PROFESSIONAL WHOSE SIGNATURE AND PERSONAL SEAL APPEAR HEREON ASSUMES RESPONSIBILITY ONLY FOR WHAT APPEARS ON THIS PAGE, AND DISCLAIMS (PURSUANT TO SECTION 327.411 RSMO) SPECIFICATION, ESTIMATES, REPORTS, OR OTHER DOCUMENTS OR INSTRUMENTS NOT SEALED BY THE UNDERSIGNED PROFESSIONAL RELATING TO OR INTENDED TO BE USED FOR ANY PART OR PARTS OF THE PROJECT TO WHICH THIS PAGE REFERS.

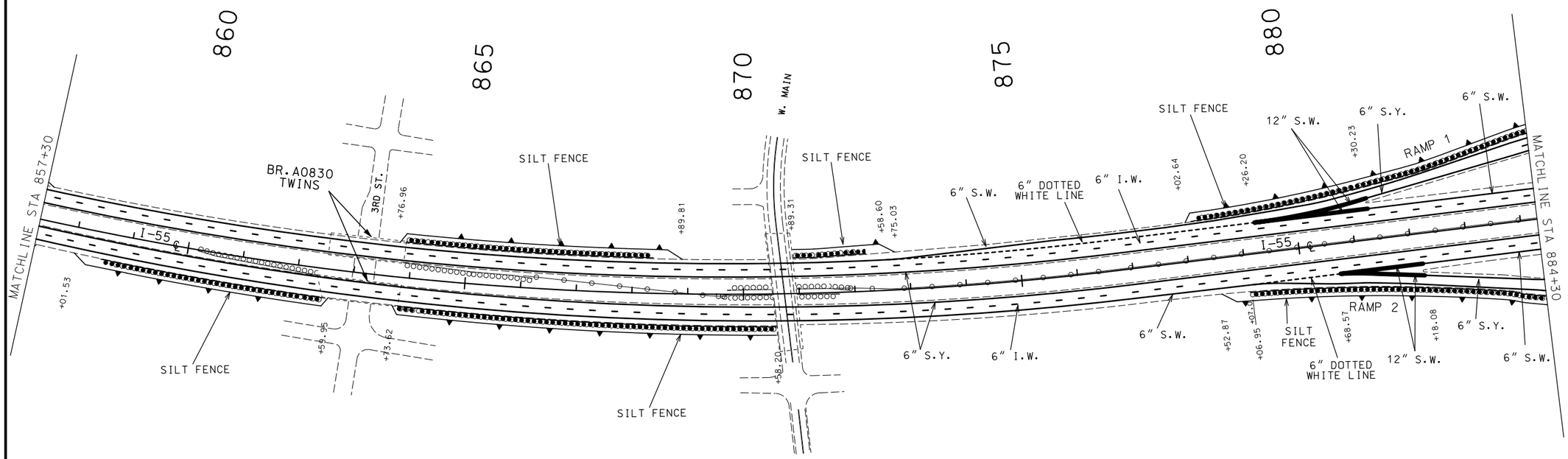

STRIPING LEGEND

———	6" S.W.	SOLID WHITE PAINT
- - - -	6" I.W.	INTERMITTENT WHITE PAINT
▬▬▬	12" S.W.	SOLID WHITE PAINT (GORE)
———	6" S.Y.	SOLID YELLOW PAINT
- - - - - -	6" D.W.L.	DOTTED WHITE LINE PAINT

(ALL PAINT TO BE HIGH BUILD WATERBORNE PAVEMENT MARKING PAINT-TYPE L BEADS)

EROSION CONTROL LEGEND

▼——▼ SILT FENCE

SCALE

0 100 200 300 400 500

STATE OF MISSOURI
SHIRLEY J. NORRIS
NUMBER PE-28779
PROFESSIONAL ENGINEER

THIS SHEET HAS BEEN SIGNED, SEALED AND DATED ELECTRONICALLY.

DATE PREPARED	
9/29/2016	
ROUTE	STATE
I-55	MO
DISTRICT	SHEET NO.
SL	53
COUNTY	
JEFFERSON	
JOB NO.	
J6I3110	
CONTRACT ID.	
PROJECT NO.	
BRIDGE NO.	

DATE	DESCRIPTION

MISSOURI HIGHWAYS AND TRANSPORTATION COMMISSION

105 WEST CAPITOL
JEFFERSON CITY, MO 65102
1-888-ASK-MODOT (1-888-275-6636)

PAVEMENT MARKING & EROSION CONTROL
SHEET 11 OF 33

IF A SEAL IS PRESENT ON THIS SHEET IT HAS BEEN ELECTRONICALLY SEALED AND DATED.

DISCLAIMER
THE PROFESSIONAL WHOSE SIGNATURE AND PERSONAL SEAL APPEAR HEREON ASSUMES RESPONSIBILITY ONLY FOR WHAT APPEARS ON THIS PAGE, AND DISCLAIMS (PURSUANT TO SECTION 327.411 RSMO) SPECIFICATION, ESTIMATES, REPORTS, OR OTHER DOCUMENTS OR INSTRUMENTS NOT SEALED BY THE UNDERSIGNED PROFESSIONAL RELATING TO OR INTENDED TO BE USED FOR ANY PART OR PARTS OF THE PROJECT TO WHICH THIS PAGE REFERS.

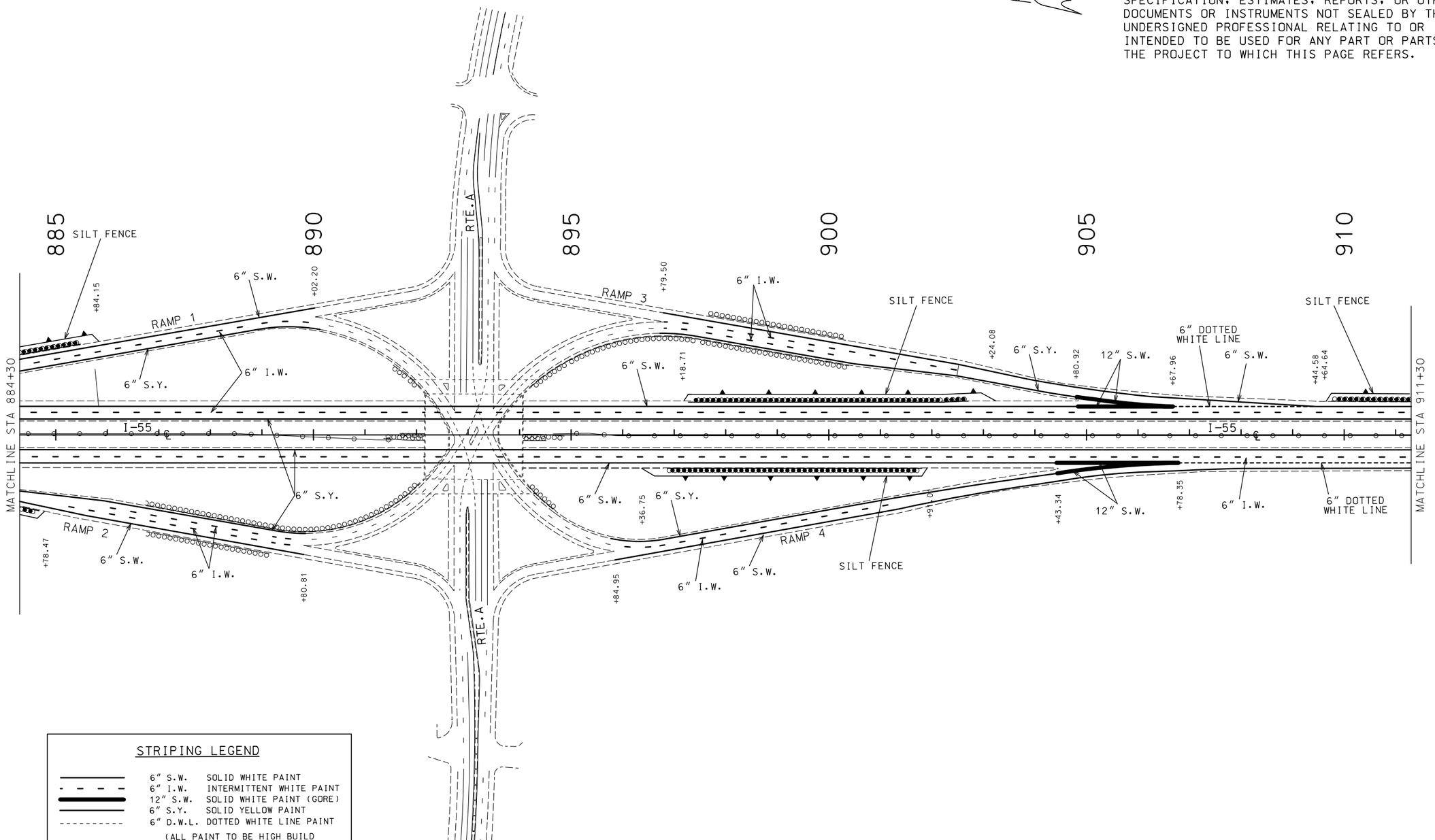

STRIPING LEGEND

———	6" S.W.	SOLID WHITE PAINT
- - - -	6" I.W.	INTERMITTENT WHITE PAINT
▬▬▬	12" S.W.	SOLID WHITE PAINT (GORE)
———	6" S.Y.	SOLID YELLOW PAINT
- - - - - -	6" D.W.L.	DOTTED WHITE LINE PAINT

(ALL PAINT TO BE HIGH BUILD WATERBORNE PAVEMENT MARKING PAINT-TYPE L BEADS)

EROSION CONTROL LEGEND

SILT FENCE

SCALE

0 100 200 300 400 500

STATE OF MISSOURI
SHIRLEY J. NORRIS
NUMBER PE-28779
PROFESSIONAL ENGINEER

THIS SHEET HAS BEEN SIGNED, SEALED AND DATED ELECTRONICALLY.

DATE PREPARED	9/29/2016
ROUTE	I-55
STATE	MO
DISTRICT	SL
SHEET NO.	54
COUNTY	JEFFERSON
JOB NO.	J6I3110
CONTRACT ID.	
PROJECT NO.	
BRIDGE NO.	

DATE	DESCRIPTION

IF A SEAL IS PRESENT ON THIS SHEET IT HAS BEEN ELECTRONICALLY SEALED AND DATED.

MISSOURI HIGHWAYS AND TRANSPORTATION COMMISSION

105 WEST CAPITOL
JEFFERSON CITY, MO 65102
1-888-ASK-MODOT (1-888-275-6636)

PAVEMENT MARKING & EROSION CONTROL
SHEET 12 OF 33

DISCLAIMER
THE PROFESSIONAL WHOSE SIGNATURE AND PERSONAL SEAL APPEAR HEREON ASSUMES RESPONSIBILITY ONLY FOR WHAT APPEARS ON THIS PAGE, AND DISCLAIMS (PURSUANT TO SECTION 327.411 RSMO) SPECIFICATION, ESTIMATES, REPORTS, OR OTHER DOCUMENTS OR INSTRUMENTS NOT SEALED BY THE UNDERSIGNED PROFESSIONAL RELATING TO OR INTENDED TO BE USED FOR ANY PART OR PARTS OF THE PROJECT TO WHICH THIS PAGE REFERS.

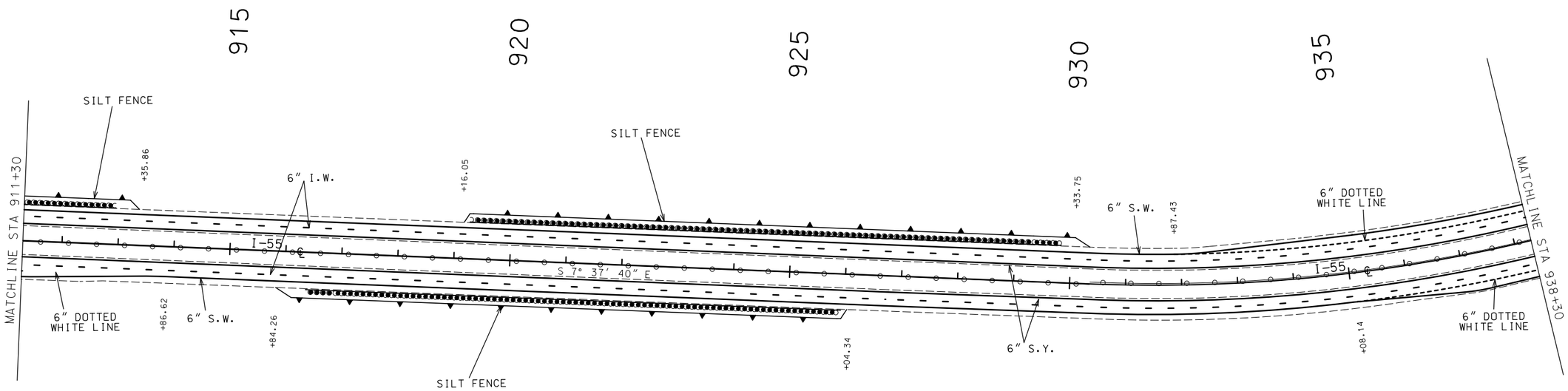

STRIPING LEGEND

———	6" S.W.	SOLID WHITE PAINT
- - - -	6" I.W.	INTERMITTENT WHITE PAINT
▬▬▬	12" S.W.	SOLID WHITE PAINT (GORE)
———	6" S.Y.	SOLID YELLOW PAINT
- - - - - -	6" D.W.L.	DOTTED WHITE LINE PAINT

(ALL PAINT TO BE HIGH BUILD WATERBORNE PAVEMENT MARKING PAINT-TYPE L BEADS)

EROSION CONTROL LEGEND

SILT FENCE

SCALE

0 100 200 300 400 500

STATE OF MISSOURI
SHIRLEY J. NORRIS
NUMBER PE-28779
PROFESSIONAL ENGINEER
THIS SHEET HAS BEEN SIGNED, SEALED AND DATED ELECTRONICALLY.

DATE PREPARED	9/29/2016
ROUTE	I-55
STATE	MO
DISTRICT	SL
SHEET NO.	55
COUNTY	JEFFERSON
JOB NO.	J6I3110
CONTRACT ID.	
PROJECT NO.	
BRIDGE NO.	

DESCRIPTION	DATE

MISSOURI HIGHWAYS AND TRANSPORTATION COMMISSION
105 WEST CAPITOL
JEFFERSON CITY, MO 65102
1-888-ASK-MODOT (1-888-275-6636)

PAVEMENT MARKING & EROSION CONTROL
SHEET 13 OF 33

IF A SEAL IS PRESENT ON THIS SHEET IT HAS BEEN ELECTRONICALLY SEALED AND DATED.

DISCLAIMER
THE PROFESSIONAL WHOSE SIGNATURE AND PERSONAL SEAL APPEAR HEREON ASSUMES RESPONSIBILITY ONLY FOR WHAT APPEARS ON THIS PAGE, AND DISCLAIMS (PURSUANT TO SECTION 327.411 RSMO) SPECIFICATION, ESTIMATES, REPORTS, OR OTHER DOCUMENTS OR INSTRUMENTS NOT SEALED BY THE UNDERSIGNED PROFESSIONAL RELATING TO OR INTENDED TO BE USED FOR ANY PART OR PARTS OF THE PROJECT TO WHICH THIS PAGE REFERS.

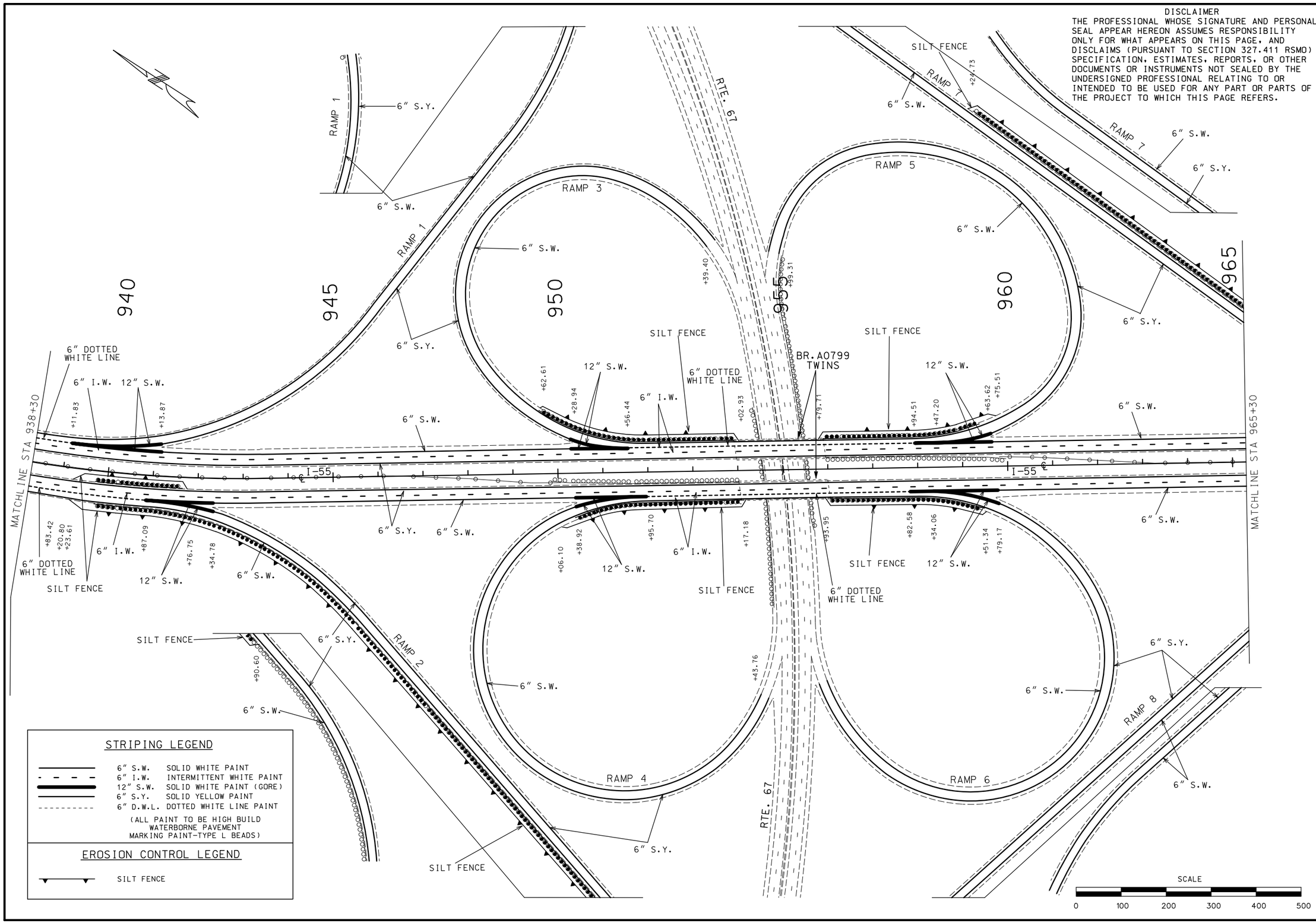

STRIPING LEGEND

———	6" S.W.	SOLID WHITE PAINT
- - -	6" I.W.	INTERMITTENT WHITE PAINT
▬▬▬	12" S.W.	SOLID WHITE PAINT (GORE)
═══	6" S.Y.	SOLID YELLOW PAINT
- - - - -	6" D.W.L.	DOTTED WHITE LINE PAINT

(ALL PAINT TO BE HIGH BUILD WATERBORNE PAVEMENT MARKING PAINT-TYPE L BEADS)

EROSION CONTROL LEGEND

SILT FENCE

STATE OF MISSOURI
SHIRLEY J. NORRIS
NUMBER PE-28779
PROFESSIONAL ENGINEER

THIS SHEET HAS BEEN SIGNED, SEALED AND DATED ELECTRONICALLY.

DATE PREPARED	
9/29/2016	
ROUTE	STATE
I-55	MO
DISTRICT	SHEET NO.
SL	56
COUNTY	
JEFFERSON	
JOB NO.	
J6I3110	
CONTRACT ID.	
PROJECT NO.	
BRIDGE NO.	

DATE	DESCRIPTION

MISSOURI HIGHWAYS AND TRANSPORTATION COMMISSION

105 WEST CAPITOL
JEFFERSON CITY, MO 65102
1-888-ASK-MODOT (1-888-275-6636)

PAVEMENT MARKING & EROSION CONTROL
SHEET 14 OF 33

IF A SEAL IS PRESENT ON THIS SHEET IT HAS BEEN ELECTRONICALLY SEALED AND DATED.

DISCLAIMER
THE PROFESSIONAL WHOSE SIGNATURE AND PERSONAL SEAL APPEAR HEREON ASSUMES RESPONSIBILITY ONLY FOR WHAT APPEARS ON THIS PAGE, AND DISCLAIMS (PURSUANT TO SECTION 327.411 RSMO) SPECIFICATION, ESTIMATES, REPORTS, OR OTHER DOCUMENTS OR INSTRUMENTS NOT SEALED BY THE UNDERSIGNED PROFESSIONAL RELATING TO OR INTENDED TO BE USED FOR ANY PART OR PARTS OF THE PROJECT TO WHICH THIS PAGE REFERS.

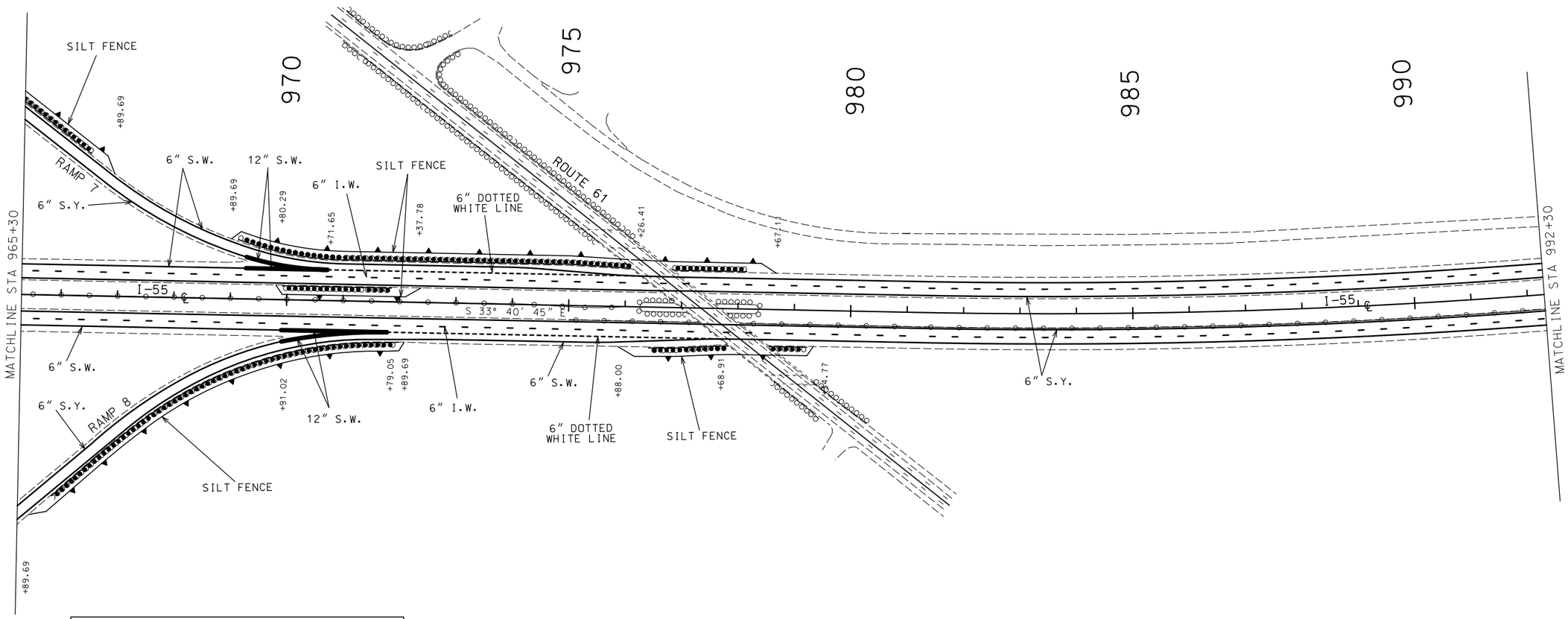

STRIPING LEGEND

———	6" S.W.	SOLID WHITE PAINT
- - - -	6" I.W.	INTERMITTENT WHITE PAINT
▬▬▬	12" S.W.	SOLID WHITE PAINT (GORE)
———	6" S.Y.	SOLID YELLOW PAINT
- - - - - -	6" D.W.L.	DOTTED WHITE LINE PAINT

(ALL PAINT TO BE HIGH BUILD WATERBORNE PAVEMENT MARKING PAINT-TYPE L BEADS)

EROSION CONTROL LEGEND

▼——▼ SILT FENCE

SCALE

0 100 200 300 400 500

STATE OF MISSOURI
SHIRLEY J. NORRIS
NUMBER PE-28779
PROFESSIONAL ENGINEER

THIS SHEET HAS BEEN SIGNED, SEALED AND DATED ELECTRONICALLY.

DATE PREPARED	
9/29/2016	
ROUTE	STATE
I-55	MO
DISTRICT	SHEET NO.
SL	57
COUNTY	
JEFFERSON	
JOB NO.	
J6I3110	
CONTRACT ID.	
PROJECT NO.	
BRIDGE NO.	

DESCRIPTION	DATE

MISSOURI HIGHWAYS AND TRANSPORTATION COMMISSION

105 WEST CAPITOL
JEFFERSON CITY, MO 65102
1-888-ASK-MODOT (1-888-275-6636)

PAVEMENT MARKING & EROSION CONTROL
SHEET 15 OF 33

IF A SEAL IS PRESENT ON THIS SHEET IT HAS BEEN ELECTRONICALLY SEALED AND DATED.

DISCLAIMER
THE PROFESSIONAL WHOSE SIGNATURE AND PERSONAL SEAL APPEAR HEREON ASSUMES RESPONSIBILITY ONLY FOR WHAT APPEARS ON THIS PAGE, AND DISCLAIMS (PURSUANT TO SECTION 327.411 RSMO) SPECIFICATION, ESTIMATES, REPORTS, OR OTHER DOCUMENTS OR INSTRUMENTS NOT SEALED BY THE UNDERSIGNED PROFESSIONAL RELATING TO OR INTENDED TO BE USED FOR ANY PART OR PARTS OF THE PROJECT TO WHICH THIS PAGE REFERS.

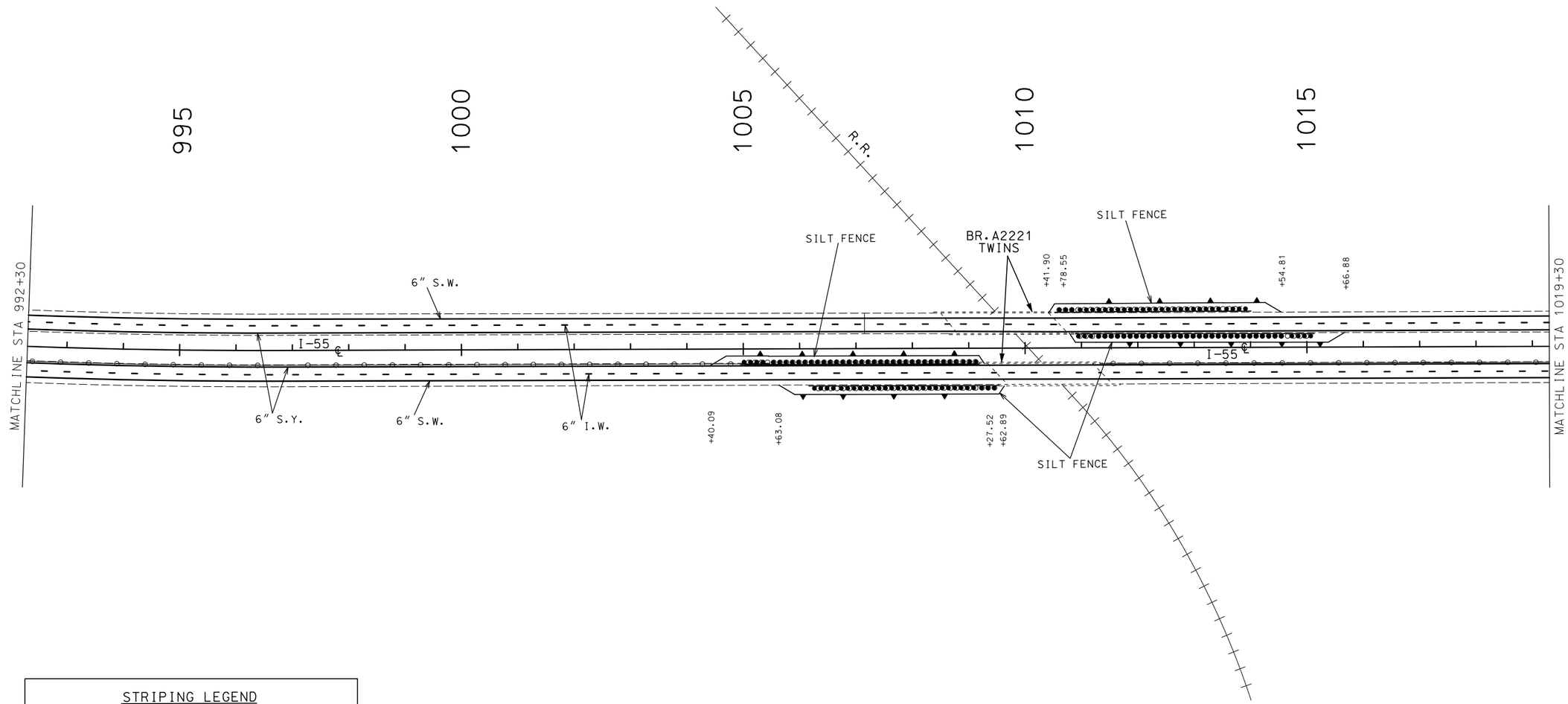

STRIPING LEGEND

———	6" S.W.	SOLID WHITE PAINT
- - - -	6" I.W.	INTERMITTENT WHITE PAINT
▬▬▬	12" S.W.	SOLID WHITE PAINT (GORE)
———	6" S.Y.	SOLID YELLOW PAINT

(ALL PAINT TO BE HIGH BUILD WATERBORNE PAVEMENT MARKING PAINT-TYPE L BEADS)

EROSION CONTROL LEGEND

SILT FENCE

SCALE
0 100 200 300 400 500

STATE OF MISSOURI
SHIRLEY J. NORRIS
NUMBER PE-28779
PROFESSIONAL ENGINEER
THIS SHEET HAS BEEN SIGNED, SEALED AND DATED ELECTRONICALLY.

DATE PREPARED	9/29/2016
ROUTE	I-55
STATE	MO
DISTRICT	SL
SHEET NO.	58
COUNTY	JEFFERSON
JOB NO.	J6I3110
CONTRACT ID.	
PROJECT NO.	
BRIDGE NO.	

DATE	DESCRIPTION

MISSOURI HIGHWAYS AND TRANSPORTATION COMMISSION
105 WEST CAPITOL
JEFFERSON CITY, MO 65102
1-888-ASK-MODOT (1-888-275-6636)

PAVEMENT MARKING & EROSION CONTROL
SHEET 16 OF 33

IF A SEAL IS PRESENT ON THIS SHEET IT HAS BEEN ELECTRONICALLY SEALED AND DATED.

DISCLAIMER
THE PROFESSIONAL WHOSE SIGNATURE AND PERSONAL SEAL APPEAR HEREON ASSUMES RESPONSIBILITY ONLY FOR WHAT APPEARS ON THIS PAGE, AND DISCLAIMS (PURSUANT TO SECTION 327.411 RSMO) SPECIFICATION, ESTIMATES, REPORTS, OR OTHER DOCUMENTS OR INSTRUMENTS NOT SEALED BY THE UNDERSIGNED PROFESSIONAL RELATING TO OR INTENDED TO BE USED FOR ANY PART OR PARTS OF THE PROJECT TO WHICH THIS PAGE REFERS.

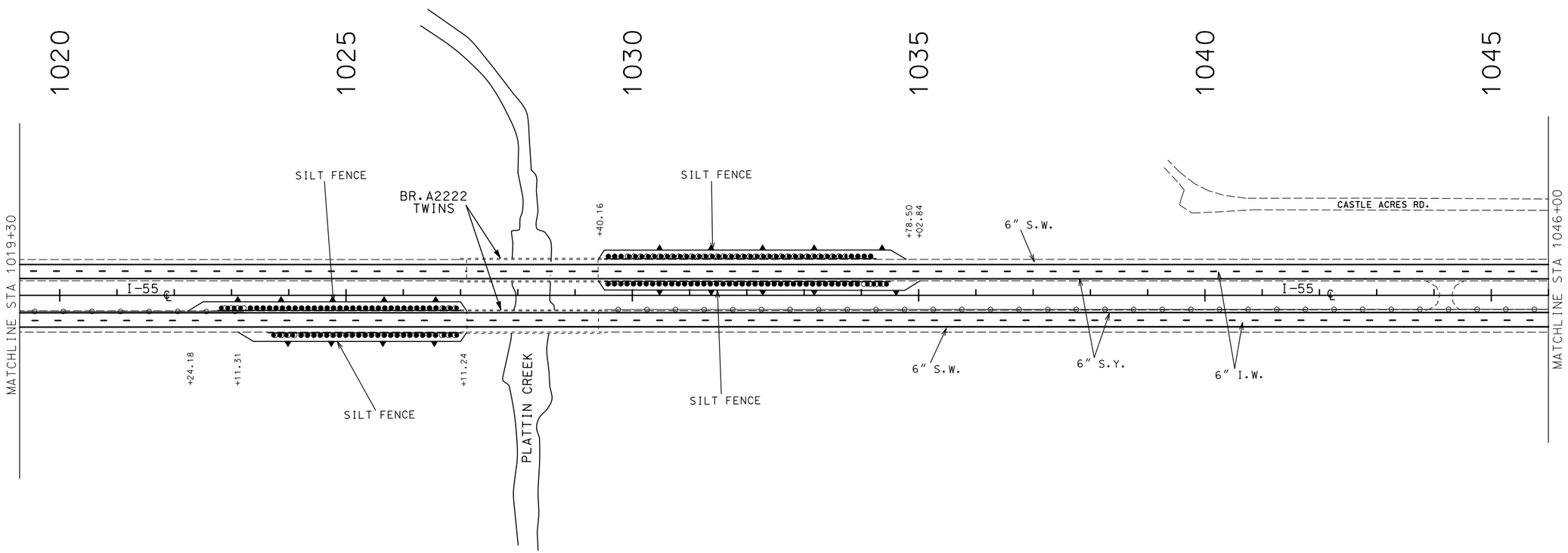

STRIPING LEGEND

———	6" S.W.	SOLID WHITE PAINT
- - - -	6" I.W.	INTERMITTENT WHITE PAINT
▬▬▬	12" S.W.	SOLID WHITE PAINT (GORE)
———	6" S.Y.	SOLID YELLOW PAINT

(ALL PAINT TO BE HIGH BUILD WATERBORNE PAVEMENT MARKING PAINT-TYPE L BEADS)

EROSION CONTROL LEGEND

▼——▼ SILT FENCE

SCALE

0 100 200 300 400 500

STATE OF MISSOURI
SHIRLEY J. NORRIS
NUMBER PE-28779
PROFESSIONAL ENGINEER

THIS SHEET HAS BEEN SIGNED, SEALED AND DATED ELECTRONICALLY.

DATE PREPARED	9/29/2016
ROUTE	I-55
STATE	MO
DISTRICT	SL
SHEET NO.	59
COUNTY	JEFFERSON
JOB NO.	J6I3110
CONTRACT ID.	
PROJECT NO.	
BRIDGE NO.	

DATE	DESCRIPTION

MISSOURI HIGHWAYS AND TRANSPORTATION COMMISSION

105 WEST CAPITOL
JEFFERSON CITY, MO 65102
1-888-ASK-MODOT (1-888-275-6636)

PAVEMENT MARKING & EROSION CONTROL
SHEET 17 OF 33

IF A SEAL IS PRESENT ON THIS SHEET IT HAS BEEN ELECTRONICALLY SEALED AND DATED.

DISCLAIMER
THE PROFESSIONAL WHOSE SIGNATURE AND PERSONAL SEAL APPEAR HEREON ASSUMES RESPONSIBILITY ONLY FOR WHAT APPEARS ON THIS PAGE, AND DISCLAIMS (PURSUANT TO SECTION 327.411 RSMO) SPECIFICATION, ESTIMATES, REPORTS, OR OTHER DOCUMENTS OR INSTRUMENTS NOT SEALED BY THE UNDERSIGNED PROFESSIONAL RELATING TO OR INTENDED TO BE USED FOR ANY PART OR PARTS OF THE PROJECT TO WHICH THIS PAGE REFERS.

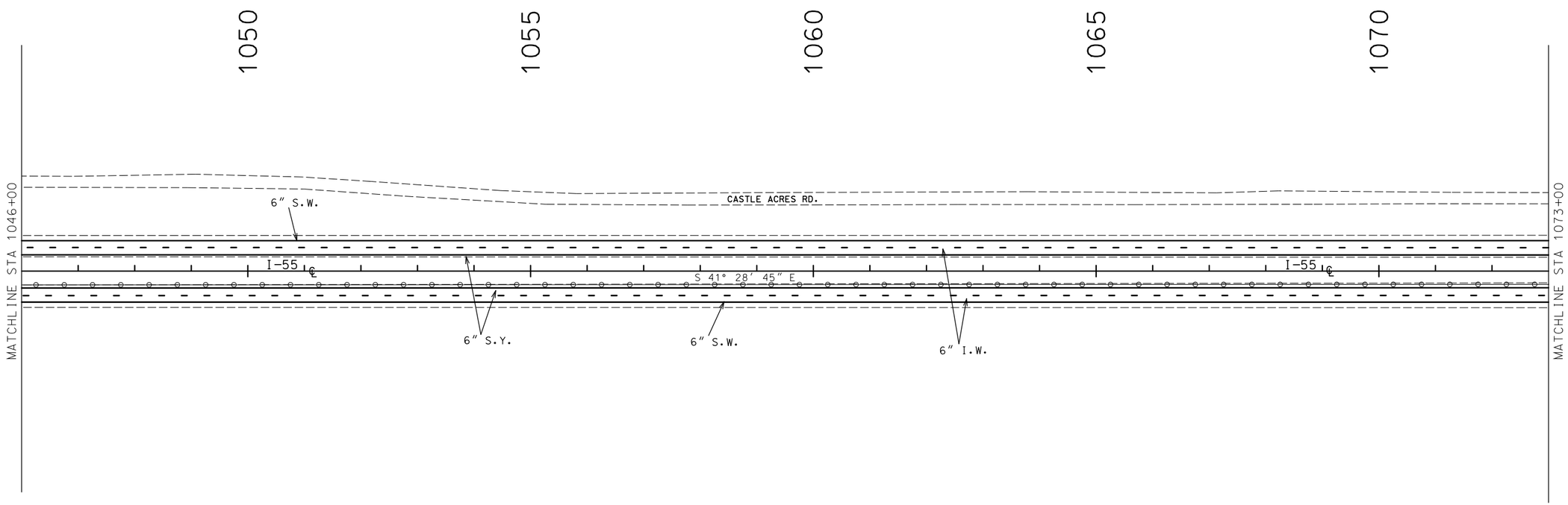

STRIPING LEGEND

———	6" S.W.	SOLID WHITE PAINT
- - - -	6" I.W.	INTERMITTENT WHITE PAINT
▬▬▬	12" S.W.	SOLID WHITE PAINT (GORE)
———	6" S.Y.	SOLID YELLOW PAINT

(ALL PAINT TO BE HIGH BUILD WATERBORNE PAVEMENT MARKING PAINT-TYPE L BEADS)

EROSION CONTROL LEGEND

SILT FENCE

SCALE

0 100 200 300 400 500

STATE OF MISSOURI
SHIRLEY J. NORRIS
NUMBER PE-28779
PROFESSIONAL ENGINEER

THIS SHEET HAS BEEN SIGNED, SEALED AND DATED ELECTRONICALLY.

DATE PREPARED	9/29/2016
ROUTE	I-55
STATE	MO
DISTRICT	SL
SHEET NO.	60
COUNTY	JEFFERSON
JOB NO.	J6I3110
CONTRACT ID.	
PROJECT NO.	
BRIDGE NO.	

DATE	DESCRIPTION

IF A SEAL IS PRESENT ON THIS SHEET IT HAS BEEN ELECTRONICALLY SEALED AND DATED.

MISSOURI HIGHWAYS AND TRANSPORTATION COMMISSION

105 WEST CAPITOL
JEFFERSON CITY, MO 65102
1-888-ASK-MODOT (1-888-275-6636)

PAVEMENT MARKING & EROSION CONTROL
SHEET 18 OF 33

DISCLAIMER
THE PROFESSIONAL WHOSE SIGNATURE AND PERSONAL SEAL APPEAR HEREON ASSUMES RESPONSIBILITY ONLY FOR WHAT APPEARS ON THIS PAGE, AND DISCLAIMS (PURSUANT TO SECTION 327.411 RSMO) SPECIFICATION, ESTIMATES, REPORTS, OR OTHER DOCUMENTS OR INSTRUMENTS NOT SEALED BY THE UNDERSIGNED PROFESSIONAL RELATING TO OR INTENDED TO BE USED FOR ANY PART OR PARTS OF THE PROJECT TO WHICH THIS PAGE REFERS.

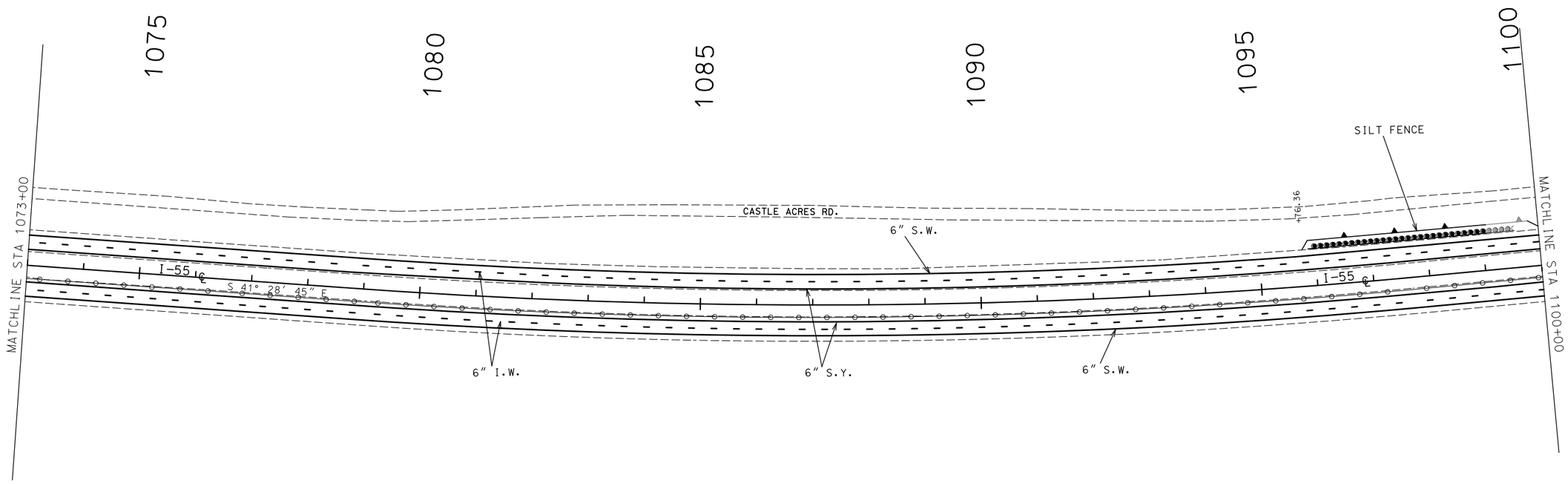

STRIPING LEGEND

———	6" S.W.	SOLID WHITE PAINT
- - - -	6" I.W.	INTERMITTENT WHITE PAINT
▬▬▬	12" S.W.	SOLID WHITE PAINT (GORE)
———	6" S.Y.	SOLID YELLOW PAINT

(ALL PAINT TO BE HIGH BUILD WATERBORNE PAVEMENT MARKING PAINT-TYPE L BEADS)

EROSION CONTROL LEGEND

SILT FENCE

SCALE

0 100 200 300 400 500

STATE OF MISSOURI
SHIRLEY J. NORRIS
NUMBER PE-28779
PROFESSIONAL ENGINEER

THIS SHEET HAS BEEN SIGNED, SEALED AND DATED ELECTRONICALLY.

DATE PREPARED	9/29/2016
ROUTE	I-55
STATE	MO
DISTRICT	SL
SHEET NO.	61
COUNTY	JEFFERSON
JOB NO.	J6I3110
CONTRACT ID.	
PROJECT NO.	
BRIDGE NO.	

DATE	DESCRIPTION

IF A SEAL IS PRESENT ON THIS SHEET IT HAS BEEN ELECTRONICALLY SEALED AND DATED.

MISSOURI HIGHWAYS AND TRANSPORTATION COMMISSION

105 WEST CAPITOL
JEFFERSON CITY, MO 65102
1-888-ASK-MODOT (1-888-275-6636)

PAVEMENT MARKING & EROSION CONTROL
SHEET 19 OF 33

DISCLAIMER
THE PROFESSIONAL WHOSE SIGNATURE AND PERSONAL SEAL APPEAR HEREON ASSUMES RESPONSIBILITY ONLY FOR WHAT APPEARS ON THIS PAGE, AND DISCLAIMS (PURSUANT TO SECTION 327.411 RSMO) SPECIFICATION, ESTIMATES, REPORTS, OR OTHER DOCUMENTS OR INSTRUMENTS NOT SEALED BY THE UNDERSIGNED PROFESSIONAL RELATING TO OR INTENDED TO BE USED FOR ANY PART OR PARTS OF THE PROJECT TO WHICH THIS PAGE REFERS.

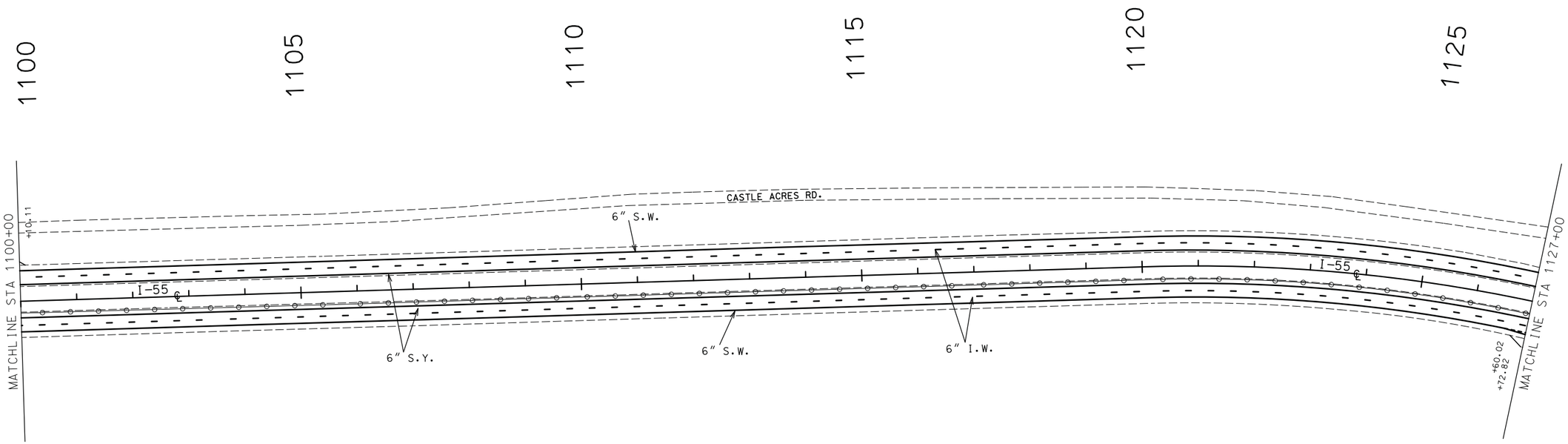

STRIPING LEGEND

———	6" S.W.	SOLID WHITE PAINT
- - - -	6" I.W.	INTERMITTENT WHITE PAINT
▬▬▬	12" S.W.	SOLID WHITE PAINT (GORE)
═══	6" S.Y.	SOLID YELLOW PAINT

(ALL PAINT TO BE HIGH BUILD WATERBORNE PAVEMENT MARKING PAINT-TYPE L BEADS)

EROSION CONTROL LEGEND

SILT FENCE

SCALE
0 100 200 300 400 500

STATE OF MISSOURI
SHIRLEY J. NORRIS
NUMBER PE-28779
PROFESSIONAL ENGINEER
THIS SHEET HAS BEEN SIGNED, SEALED AND DATED ELECTRONICALLY.

DATE PREPARED	9/29/2016
ROUTE	I-55
STATE	MO
DISTRICT	SL
SHEET NO.	62
COUNTY	JEFFERSON
JOB NO.	J6I3110
CONTRACT ID.	
PROJECT NO.	
BRIDGE NO.	

DATE	DESCRIPTION

IF A SEAL IS PRESENT ON THIS SHEET IT HAS BEEN ELECTRONICALLY SEALED AND DATED.

MISSOURI HIGHWAYS AND TRANSPORTATION COMMISSION
105 WEST CAPITOL
JEFFERSON CITY, MO 65102
1-888-ASK-MODOT (1-888-275-6636)

PAVEMENT MARKING & EROSION CONTROL
SHEET 20 OF 33

DISCLAIMER
THE PROFESSIONAL WHOSE SIGNATURE AND PERSONAL SEAL APPEAR HEREON ASSUMES RESPONSIBILITY ONLY FOR WHAT APPEARS ON THIS PAGE, AND DISCLAIMS (PURSUANT TO SECTION 327.411 RSMO) SPECIFICATION, ESTIMATES, REPORTS, OR OTHER DOCUMENTS OR INSTRUMENTS NOT SEALED BY THE UNDERSIGNED PROFESSIONAL RELATING TO OR INTENDED TO BE USED FOR ANY PART OR PARTS OF THE PROJECT TO WHICH THIS PAGE REFERS.

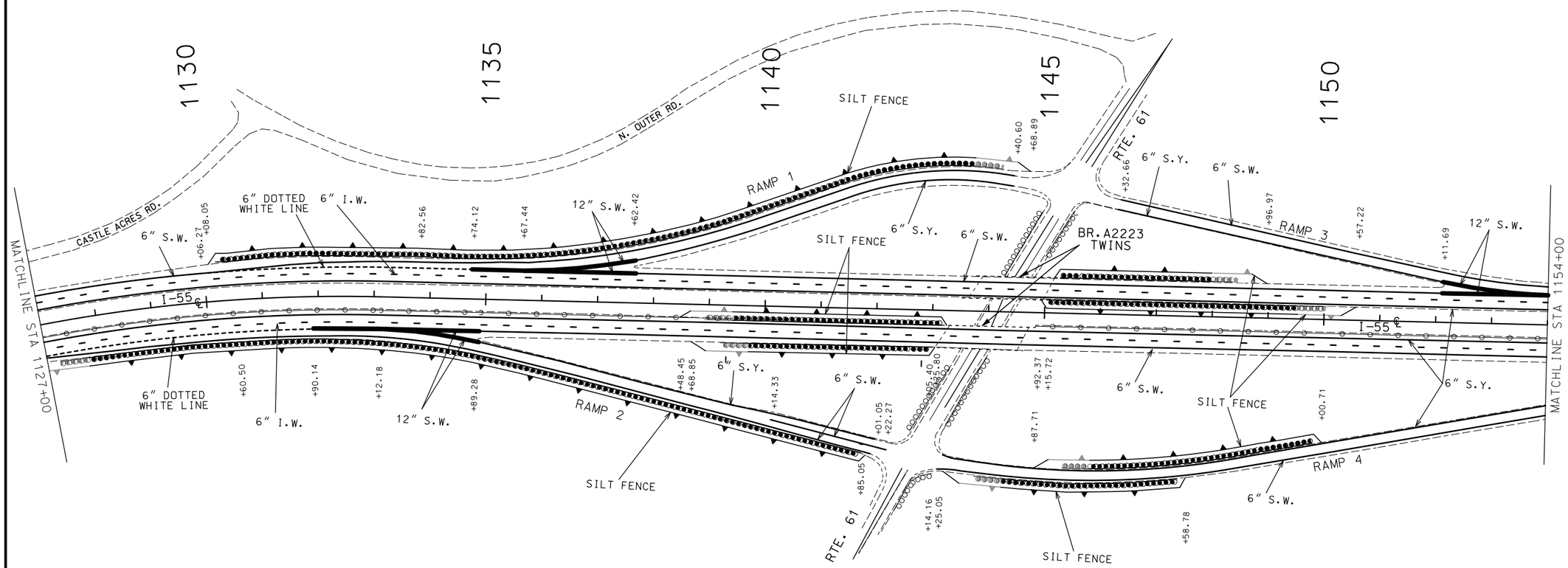

STRIPING LEGEND

———	6" S.W.	SOLID WHITE PAINT
- - - -	6" I.W.	INTERMITTENT WHITE PAINT
▬▬▬	12" S.W.	SOLID WHITE PAINT (GORE)
———	6" S.Y.	SOLID YELLOW PAINT
- - - - - -	6" D.W.L.	DOTTED WHITE LINE PAINT

(ALL PAINT TO BE HIGH BUILD WATERBORNE PAVEMENT MARKING PAINT-TYPE L BEADS)

EROSION CONTROL LEGEND

SILT FENCE

SCALE

0 100 200 300 400 500

STATE OF MISSOURI
SHIRLEY J. NORRIS
NUMBER PE-28779
PROFESSIONAL ENGINEER

THIS SHEET HAS BEEN SIGNED, SEALED AND DATED ELECTRONICALLY.

DATE PREPARED	9/29/2016
ROUTE	I-55
STATE	MO
DISTRICT	SL
SHEET NO.	63
COUNTY	JEFFERSON
JOB NO.	J6I3110
CONTRACT ID.	
PROJECT NO.	
BRIDGE NO.	

DESCRIPTION

DATE

MISSOURI HIGHWAYS AND TRANSPORTATION COMMISSION

105 WEST CAPITOL
JEFFERSON CITY, MO 65102
1-888-ASK-MODOT (1-888-275-6636)

PAVEMENT MARKING & EROSION CONTROL
SHEET 21 OF 33

IF A SEAL IS PRESENT ON THIS SHEET IT HAS BEEN ELECTRONICALLY SEALED AND DATED.

DISCLAIMER
THE PROFESSIONAL WHOSE SIGNATURE AND PERSONAL SEAL APPEAR HEREON ASSUMES RESPONSIBILITY ONLY FOR WHAT APPEARS ON THIS PAGE, AND DISCLAIMS (PURSUANT TO SECTION 327.411 RSMO) SPECIFICATION, ESTIMATES, REPORTS, OR OTHER DOCUMENTS OR INSTRUMENTS NOT SEALED BY THE UNDERSIGNED PROFESSIONAL RELATING TO OR INTENDED TO BE USED FOR ANY PART OR PARTS OF THE PROJECT TO WHICH THIS PAGE REFERS.

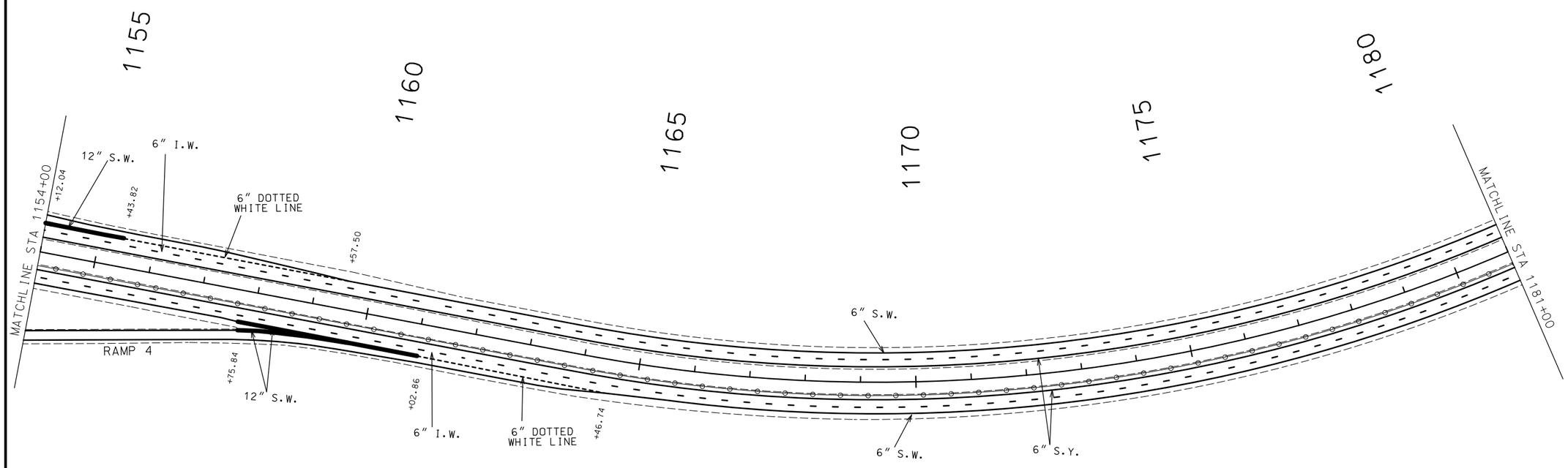

STRIPING LEGEND

———	6" S.W.	SOLID WHITE PAINT
- - - -	6" I.W.	INTERMITTENT WHITE PAINT
▬▬▬	12" S.W.	SOLID WHITE PAINT (GORE)
———	6" S.Y.	SOLID YELLOW PAINT
- - - -	6" D.W.L.	DOTTED WHITE LINE PAINT

(ALL PAINT TO BE HIGH BUILD WATERBORNE PAVEMENT MARKING PAINT-TYPE L BEADS)

EROSION CONTROL LEGEND

▼——▼ SILT FENCE

SCALE
0 100 200 300 400 500

STATE OF MISSOURI
SHIRLEY J. NORRIS
NUMBER PE-28779
PROFESSIONAL ENGINEER
THIS SHEET HAS BEEN SIGNED, SEALED AND DATED ELECTRONICALLY.

DATE PREPARED	9/29/2016
ROUTE	I-55
STATE	MO
DISTRICT	SL
SHEET NO.	64
COUNTY	JEFFERSON
JOB NO.	J6I3110
CONTRACT ID.	
PROJECT NO.	
BRIDGE NO.	

DATE	DESCRIPTION

MISSOURI HIGHWAYS AND TRANSPORTATION COMMISSION
105 WEST CAPITOL
JEFFERSON CITY, MO 65102
1-888-ASK-MODOT (1-888-275-6636)

PAVEMENT MARKING & EROSION CONTROL
SHEET 22 OF 33

IF A SEAL IS PRESENT ON THIS SHEET IT HAS BEEN ELECTRONICALLY SEALED AND DATED.

DISCLAIMER
THE PROFESSIONAL WHOSE SIGNATURE AND PERSONAL SEAL APPEAR HEREON ASSUMES RESPONSIBILITY ONLY FOR WHAT APPEARS ON THIS PAGE, AND DISCLAIMS (PURSUANT TO SECTION 327.411 RSMO) SPECIFICATION, ESTIMATES, REPORTS, OR OTHER DOCUMENTS OR INSTRUMENTS NOT SEALED BY THE UNDERSIGNED PROFESSIONAL RELATING TO OR INTENDED TO BE USED FOR ANY PART OR PARTS OF THE PROJECT TO WHICH THIS PAGE REFERS.

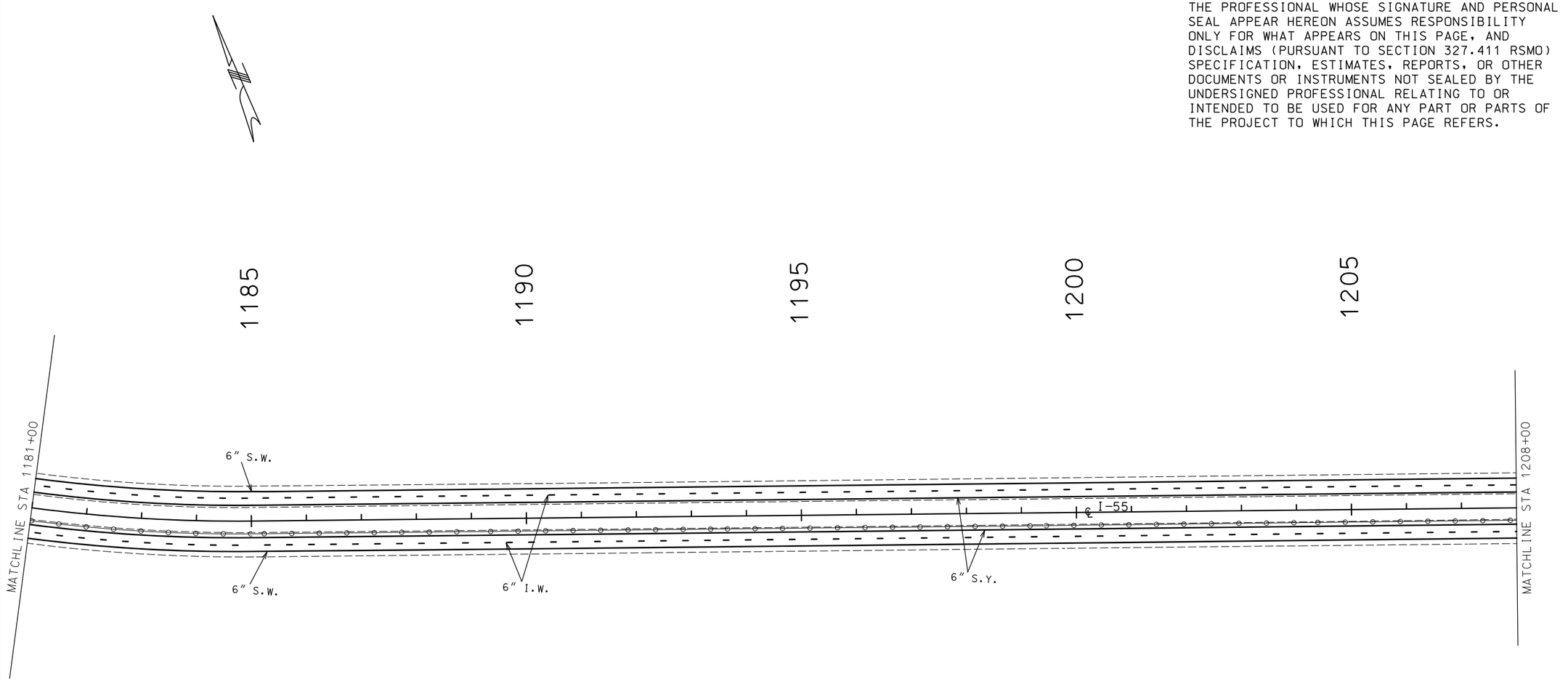

STRIPING LEGEND

———	6" S.W.	SOLID WHITE PAINT
- - - -	6" I.W.	INTERMITTENT WHITE PAINT
▬▬▬	12" S.W.	SOLID WHITE PAINT (GORE)
═══	6" S.Y.	SOLID YELLOW PAINT

(ALL PAINT TO BE HIGH BUILD WATERBORNE PAVEMENT MARKING PAINT-TYPE L BEADS)

EROSION CONTROL LEGEND

▼——▼ SILT FENCE

SCALE
0 100 200 300 400 500

STATE OF MISSOURI
SHIRLEY J. NORRIS
NUMBER PE-28779
PROFESSIONAL ENGINEER
THIS SHEET HAS BEEN SIGNED, SEALED AND DATED ELECTRONICALLY.

DATE PREPARED	
9/29/2016	
ROUTE	STATE
I-55	MO
DISTRICT	SHEET NO.
SL	65
COUNTY	
JEFFERSON	
JOB NO.	
J6I3110	
CONTRACT ID.	
PROJECT NO.	
BRIDGE NO.	

DESCRIPTION	DATE

IF A SEAL IS PRESENT ON THIS SHEET IT HAS BEEN ELECTRONICALLY SEALED AND DATED.

MISSOURI HIGHWAYS AND TRANSPORTATION COMMISSION
105 WEST CAPITOL
JEFFERSON CITY, MO 65102
1-888-ASK-MODOT (1-888-275-6636)

PAVEMENT MARKING & EROSION CONTROL
SHEET 23 OF 33

DISCLAIMER
THE PROFESSIONAL WHOSE SIGNATURE AND PERSONAL SEAL APPEAR HEREON ASSUMES RESPONSIBILITY ONLY FOR WHAT APPEARS ON THIS PAGE, AND DISCLAIMS (PURSUANT TO SECTION 327.411 RSMO) SPECIFICATION, ESTIMATES, REPORTS, OR OTHER DOCUMENTS OR INSTRUMENTS NOT SEALED BY THE UNDERSIGNED PROFESSIONAL RELATING TO OR INTENDED TO BE USED FOR ANY PART OR PARTS OF THE PROJECT TO WHICH THIS PAGE REFERS.

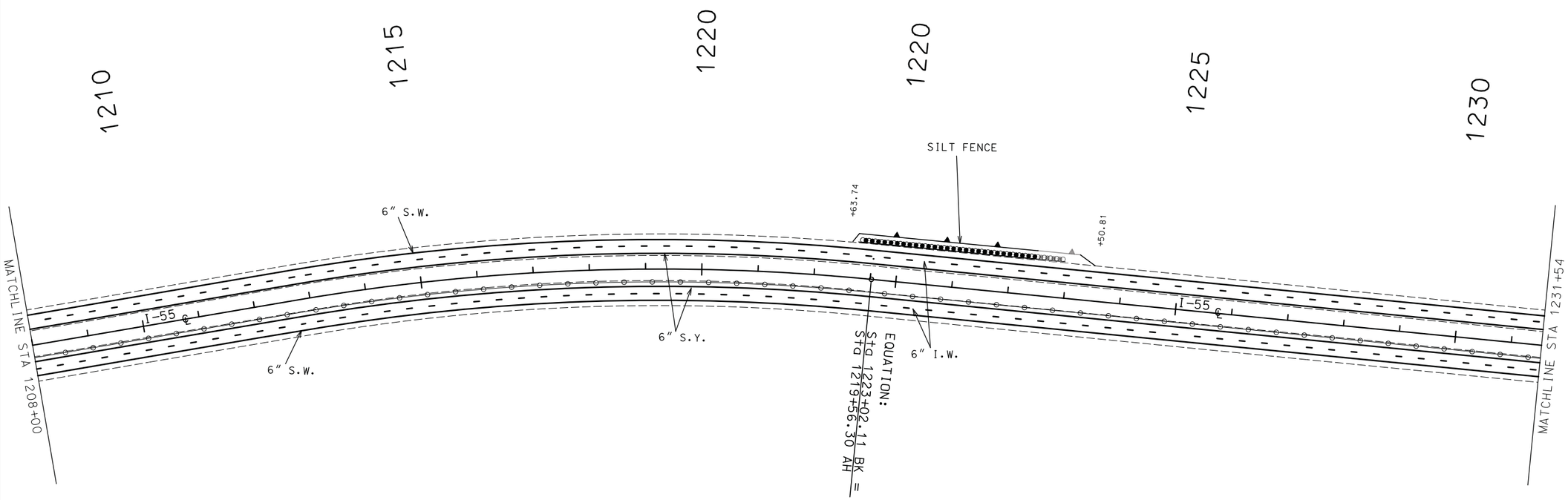

STRIPING LEGEND

———	6" S.W.	SOLID WHITE PAINT
- - - -	6" I.W.	INTERMITTENT WHITE PAINT
▬▬▬	12" S.W.	SOLID WHITE PAINT (GORE)
———	6" S.Y.	SOLID YELLOW PAINT

(ALL PAINT TO BE HIGH BUILD WATERBORNE PAVEMENT MARKING PAINT-TYPE L BEADS)

EROSION CONTROL LEGEND

SILT FENCE

SCALE

0 100 200 300 400 500

STATE OF MISSOURI
SHIRLEY J. NORRIS
NUMBER PE-28779
PROFESSIONAL ENGINEER

THIS SHEET HAS BEEN SIGNED, SEALED AND DATED ELECTRONICALLY.

DATE PREPARED	9/29/2016
ROUTE	I-55
STATE	MO
DISTRICT	SL
SHEET NO.	66
COUNTY	JEFFERSON
JOB NO.	J6I3110
CONTRACT ID.	
PROJECT NO.	
BRIDGE NO.	

DATE	DESCRIPTION

IF A SEAL IS PRESENT ON THIS SHEET IT HAS BEEN ELECTRONICALLY SEALED AND DATED.

MISSOURI HIGHWAYS AND TRANSPORTATION COMMISSION

105 WEST CAPITOL
JEFFERSON CITY, MO 65102
1-888-ASK-MODOT (1-888-275-6636)

PAVEMENT MARKING & EROSION CONTROL
SHEET 24 OF 33

DISCLAIMER
THE PROFESSIONAL WHOSE SIGNATURE AND PERSONAL SEAL APPEAR HEREON ASSUMES RESPONSIBILITY ONLY FOR WHAT APPEARS ON THIS PAGE, AND DISCLAIMS (PURSUANT TO SECTION 327.411 RSMO) SPECIFICATION, ESTIMATES, REPORTS, OR OTHER DOCUMENTS OR INSTRUMENTS NOT SEALED BY THE UNDERSIGNED PROFESSIONAL RELATING TO OR INTENDED TO BE USED FOR ANY PART OR PARTS OF THE PROJECT TO WHICH THIS PAGE REFERS.

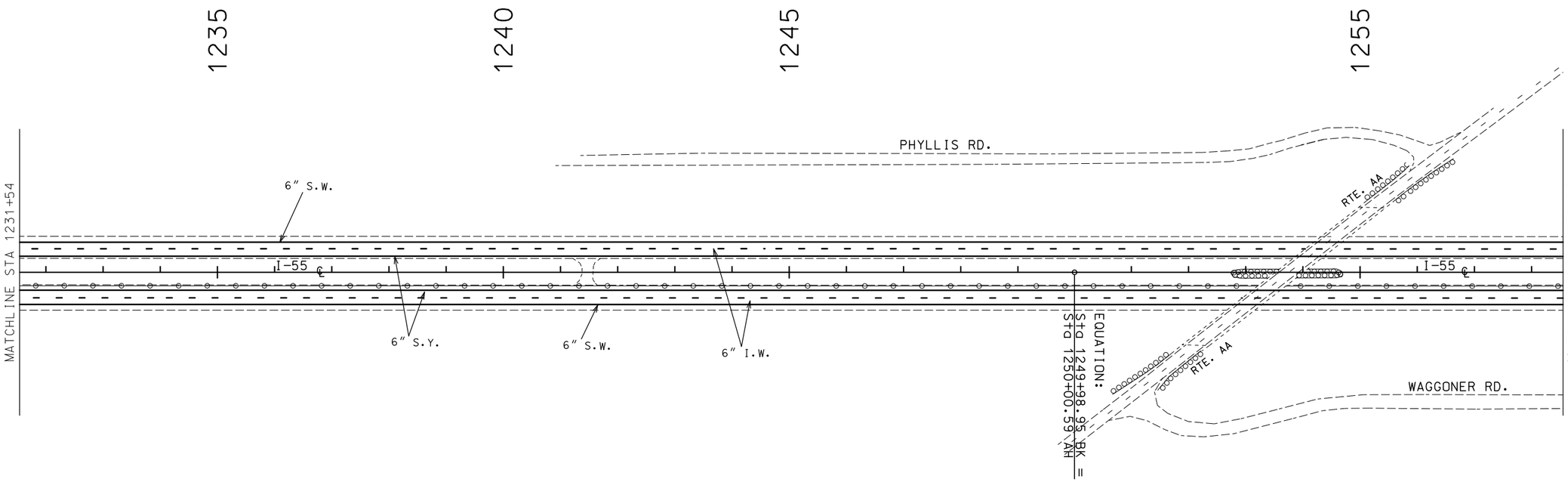

STRIPING LEGEND

———	6" S.W.	SOLID WHITE PAINT
- - - -	6" I.W.	INTERMITTENT WHITE PAINT
▬▬▬	12" S.W.	SOLID WHITE PAINT (GORE)
═══	6" S.Y.	SOLID YELLOW PAINT

(ALL PAINT TO BE HIGH BUILD WATERBORNE PAVEMENT MARKING PAINT-TYPE L BEADS)

EROSION CONTROL LEGEND

▼——▼ SILT FENCE

SCALE

0 100 200 300 400 500

STATE OF MISSOURI
SHIRLEY J. NORRIS
NUMBER PE-28779
PROFESSIONAL ENGINEER

THIS SHEET HAS BEEN SIGNED, SEALED AND DATED ELECTRONICALLY.

DATE PREPARED	9/29/2016
ROUTE	I-55
STATE	MO
DISTRICT	SL
SHEET NO.	67
COUNTY	JEFFERSON
JOB NO.	J6I3110
CONTRACT ID.	
PROJECT NO.	
BRIDGE NO.	

DATE	DESCRIPTION

MISSOURI HIGHWAYS AND TRANSPORTATION COMMISSION

105 WEST CAPITOL
JEFFERSON CITY, MO 65102
1-888-ASK-MODOT (1-888-275-6636)

PAVEMENT MARKING & EROSION CONTROL
SHEET 25 OF 33

IF A SEAL IS PRESENT ON THIS SHEET IT HAS BEEN ELECTRONICALLY SEALED AND DATED.

DISCLAIMER
THE PROFESSIONAL WHOSE SIGNATURE AND PERSONAL SEAL APPEAR HEREON ASSUMES RESPONSIBILITY ONLY FOR WHAT APPEARS ON THIS PAGE, AND DISCLAIMS (PURSUANT TO SECTION 327.411 RSMO) SPECIFICATION, ESTIMATES, REPORTS, OR OTHER DOCUMENTS OR INSTRUMENTS NOT SEALED BY THE UNDERSIGNED PROFESSIONAL RELATING TO OR INTENDED TO BE USED FOR ANY PART OR PARTS OF THE PROJECT TO WHICH THIS PAGE REFERS.

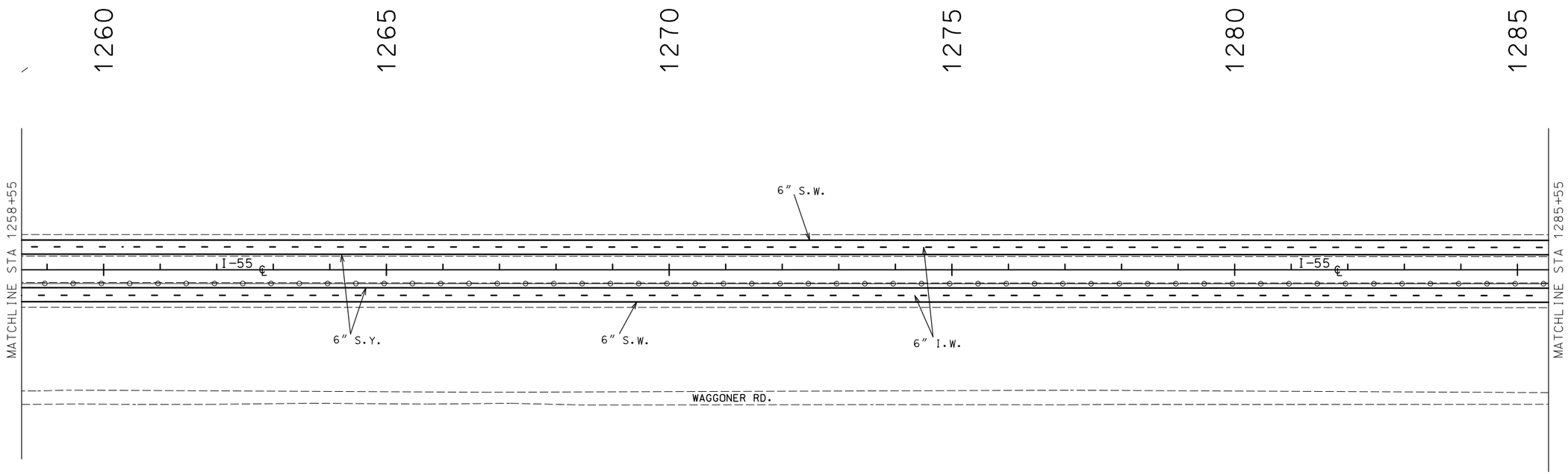

STRIPING LEGEND

———	6" S.W.	SOLID WHITE PAINT
- - - -	6" I.W.	INTERMITTENT WHITE PAINT
▬▬▬	12" S.W.	SOLID WHITE PAINT (GORE)
———	6" S.Y.	SOLID YELLOW PAINT

(ALL PAINT TO BE HIGH BUILD WATERBORNE PAVEMENT MARKING PAINT-TYPE L BEADS)

EROSION CONTROL LEGEND

SILT FENCE

SCALE
0 100 200 300 400 500

STATE OF MISSOURI
SHIRLEY J. NORRIS
NUMBER PE-28779
PROFESSIONAL ENGINEER
THIS SHEET HAS BEEN SIGNED, SEALED AND DATED ELECTRONICALLY.

DATE PREPARED	9/29/2016
ROUTE	I-55
STATE	MO
DISTRICT	SL
SHEET NO.	68
COUNTY	JEFFERSON
JOB NO.	J6I3110
CONTRACT ID.	
PROJECT NO.	
BRIDGE NO.	

DATE	DESCRIPTION

IF A SEAL IS PRESENT ON THIS SHEET IT HAS BEEN ELECTRONICALLY SEALED AND DATED.

MISSOURI HIGHWAYS AND TRANSPORTATION COMMISSION
105 WEST CAPITOL
JEFFERSON CITY, MO 65102
1-888-ASK-MODOT (1-888-275-6636)

PAVEMENT MARKING & EROSION CONTROL
SHEET 26 OF 33

DISCLAIMER
THE PROFESSIONAL WHOSE SIGNATURE AND PERSONAL SEAL APPEAR HEREON ASSUMES RESPONSIBILITY ONLY FOR WHAT APPEARS ON THIS PAGE, AND DISCLAIMS (PURSUANT TO SECTION 327.411 RSMO) SPECIFICATION, ESTIMATES, REPORTS, OR OTHER DOCUMENTS OR INSTRUMENTS NOT SEALED BY THE UNDERSIGNED PROFESSIONAL RELATING TO OR INTENDED TO BE USED FOR ANY PART OR PARTS OF THE PROJECT TO WHICH THIS PAGE REFERS.

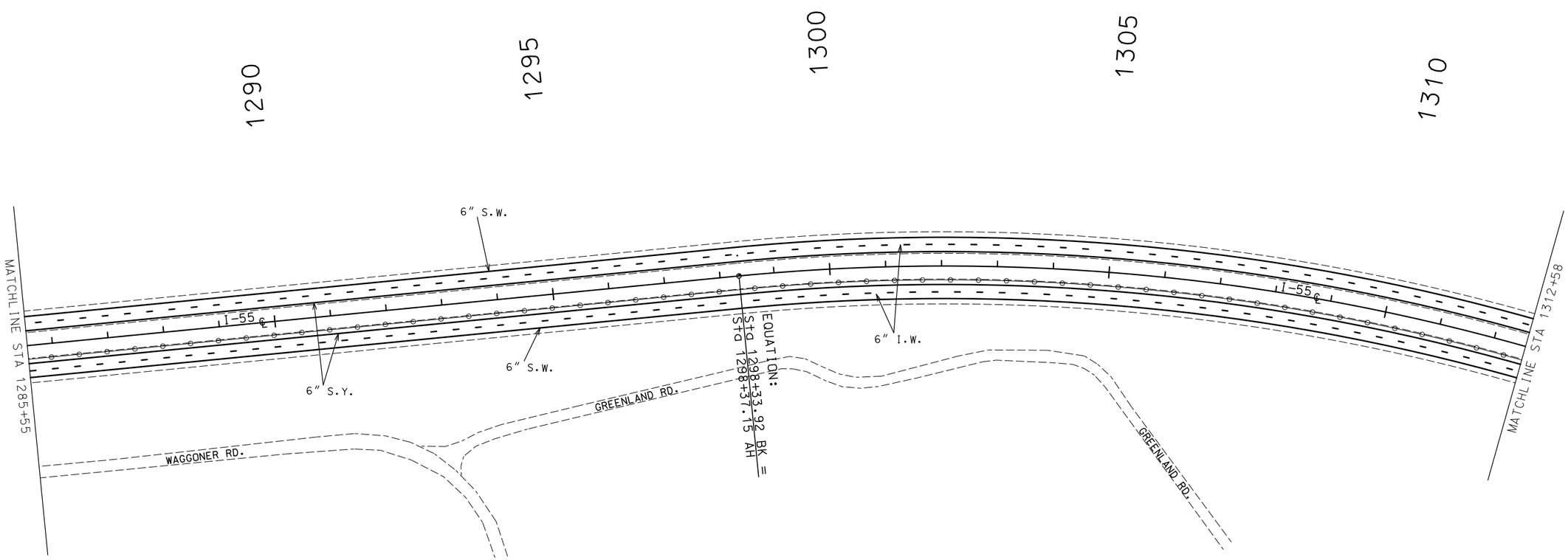

STRIPING LEGEND

6" S.W.	SOLID WHITE PAINT
6" I.W.	INTERMITTENT WHITE PAINT
12" S.W.	SOLID WHITE PAINT (GORE)
6" S.Y.	SOLID YELLOW PAINT

(ALL PAINT TO BE HIGH BUILD WATERBORNE PAVEMENT MARKING PAINT-TYPE L BEADS)

EROSION CONTROL LEGEND

SILT FENCE

SCALE
0 100 200 300 400 500

STATE OF MISSOURI
SHIRLEY J. NORRIS
NUMBER PE-28779
PROFESSIONAL ENGINEER
THIS SHEET HAS BEEN SIGNED, SEALED AND DATED ELECTRONICALLY.

DATE PREPARED 9/29/2016

ROUTE	STATE
I-55	MO
DISTRICT	SHEET NO.
SL	69

COUNTY JEFFERSON
JOB NO. J6I3110
CONTRACT ID.
PROJECT NO.
BRIDGE NO.

DATE	DESCRIPTION

IF A SEAL IS PRESENT ON THIS SHEET IT HAS BEEN ELECTRONICALLY SEALED AND DATED.

MISSOURI HIGHWAYS AND TRANSPORTATION COMMISSION
105 WEST CAPITOL
JEFFERSON CITY, MO 65102
1-888-ASK-MODOT (1-888-275-6636)

PAVEMENT MARKING & EROSION CONTROL
SHEET 27 OF 33

DISCLAIMER
THE PROFESSIONAL WHOSE SIGNATURE AND PERSONAL SEAL APPEAR HEREON ASSUMES RESPONSIBILITY ONLY FOR WHAT APPEARS ON THIS PAGE, AND DISCLAIMS (PURSUANT TO SECTION 327.411 RSMO) SPECIFICATION, ESTIMATES, REPORTS, OR OTHER DOCUMENTS OR INSTRUMENTS NOT SEALED BY THE UNDERSIGNED PROFESSIONAL RELATING TO OR INTENDED TO BE USED FOR ANY PART OR PARTS OF THE PROJECT TO WHICH THIS PAGE REFERS.

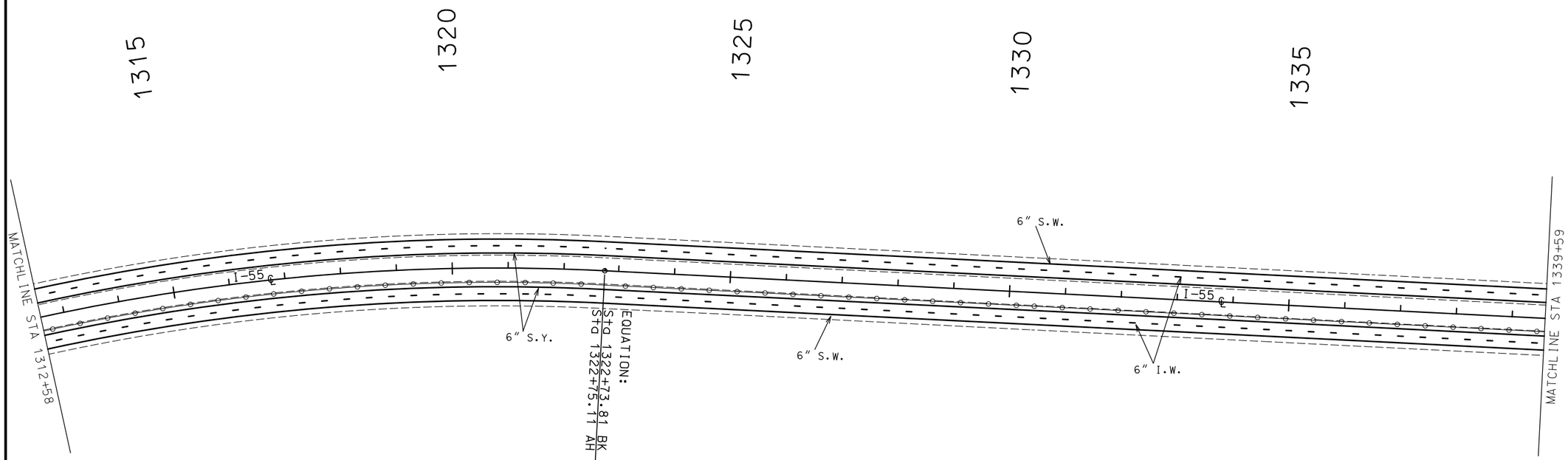

STRIPING LEGEND

6″ S.W.	SOLID WHITE PAINT
6″ I.W.	INTERMITTENT WHITE PAINT
12″ S.W.	SOLID WHITE PAINT (GORE)
6″ S.Y.	SOLID YELLOW PAINT

(ALL PAINT TO BE HIGH BUILD WATERBORNE PAVEMENT MARKING PAINT-TYPE L BEADS)

EROSION CONTROL LEGEND

SILT FENCE

SCALE

0 100 200 300 400 500

STATE OF MISSOURI
SHIRLEY J. NORRIS
NUMBER PE-28779
PROFESSIONAL ENGINEER

THIS SHEET HAS BEEN SIGNED, SEALED AND DATED ELECTRONICALLY.

DATE PREPARED	9/29/2016
ROUTE	I-55
STATE	MO
DISTRICT	SL
SHEET NO.	70
COUNTY	JEFFERSON
JOB NO.	J6I3110
CONTRACT ID.	
PROJECT NO.	
BRIDGE NO.	

DATE	DESCRIPTION

IF A SEAL IS PRESENT ON THIS SHEET IT HAS BEEN ELECTRONICALLY SEALED AND DATED.

MISSOURI HIGHWAYS AND TRANSPORTATION COMMISSION

105 WEST CAPITOL
JEFFERSON CITY, MO 65102
1-888-ASK-MODOT (1-888-275-6636)

PAVEMENT MARKING & EROSION CONTROL
SHEET 28 OF 33

DISCLAIMER
THE PROFESSIONAL WHOSE SIGNATURE AND PERSONAL SEAL APPEAR HEREON ASSUMES RESPONSIBILITY ONLY FOR WHAT APPEARS ON THIS PAGE, AND DISCLAIMS (PURSUANT TO SECTION 327.411 RSMO) SPECIFICATION, ESTIMATES, REPORTS, OR OTHER DOCUMENTS OR INSTRUMENTS NOT SEALED BY THE UNDERSIGNED PROFESSIONAL RELATING TO OR INTENDED TO BE USED FOR ANY PART OR PARTS OF THE PROJECT TO WHICH THIS PAGE REFERS.

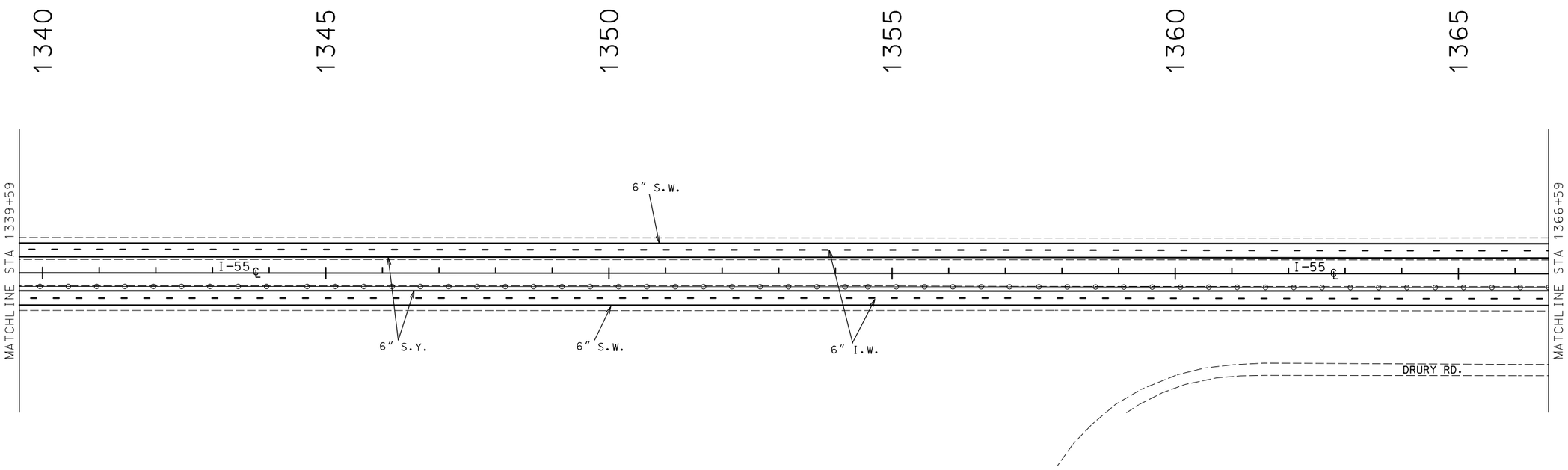

STRIPING LEGEND

———	6" S.W.	SOLID WHITE PAINT
- - - -	6" I.W.	INTERMITTENT WHITE PAINT
▬▬▬	12" S.W.	SOLID WHITE PAINT (GORE)
———	6" S.Y.	SOLID YELLOW PAINT

(ALL PAINT TO BE HIGH BUILD WATERBORNE PAVEMENT MARKING PAINT-TYPE L BEADS)

EROSION CONTROL LEGEND

SILT FENCE

SCALE
0 100 200 300 400 500

STATE OF MISSOURI
SHIRLEY J. NORRIS
NUMBER PE-28779
PROFESSIONAL ENGINEER
THIS SHEET HAS BEEN SIGNED, SEALED AND DATED ELECTRONICALLY.

DATE PREPARED	9/29/2016
ROUTE	I-55
STATE	MO
DISTRICT	SL
SHEET NO.	71
COUNTY	JEFFERSON
JOB NO.	J6I3110
CONTRACT ID.	
PROJECT NO.	
BRIDGE NO.	

DATE	DESCRIPTION

IF A SEAL IS PRESENT ON THIS SHEET IT HAS BEEN ELECTRONICALLY SEALED AND DATED.

MISSOURI HIGHWAYS AND TRANSPORTATION COMMISSION
105 WEST CAPITOL
JEFFERSON CITY, MO 65102
1-888-ASK-MODOT (1-888-275-6636)

PAVEMENT MARKING & EROSION CONTROL
SHEET 29 OF 33

DISCLAIMER
THE PROFESSIONAL WHOSE SIGNATURE AND PERSONAL SEAL APPEAR HEREON ASSUMES RESPONSIBILITY ONLY FOR WHAT APPEARS ON THIS PAGE, AND DISCLAIMS (PURSUANT TO SECTION 327.411 RSMO) SPECIFICATION, ESTIMATES, REPORTS, OR OTHER DOCUMENTS OR INSTRUMENTS NOT SEALED BY THE UNDERSIGNED PROFESSIONAL RELATING TO OR INTENDED TO BE USED FOR ANY PART OR PARTS OF THE PROJECT TO WHICH THIS PAGE REFERS.

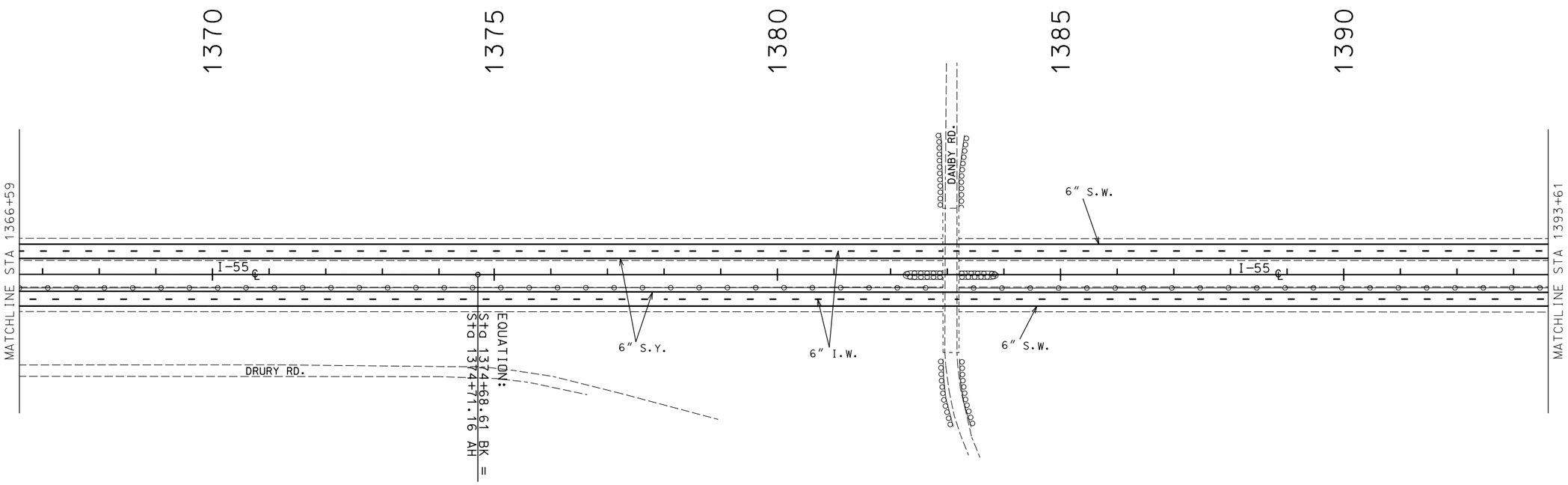

STRIPING LEGEND

———	6" S.W.	SOLID WHITE PAINT
- - - -	6" I.W.	INTERMITTENT WHITE PAINT
▬▬▬	12" S.W.	SOLID WHITE PAINT (GORE)
———	6" S.Y.	SOLID YELLOW PAINT

(ALL PAINT TO BE HIGH BUILD WATERBORNE PAVEMENT MARKING PAINT-TYPE L BEADS)

EROSION CONTROL LEGEND

SILT FENCE

SCALE
0 100 200 300 400 500

STATE OF MISSOURI
SHIRLEY J. NORRIS
NUMBER PE-28779
PROFESSIONAL ENGINEER
THIS SHEET HAS BEEN SIGNED, SEALED AND DATED ELECTRONICALLY.

DATE PREPARED	9/29/2016
ROUTE	I-55
STATE	MO
DISTRICT	SL
SHEET NO.	72
COUNTY	JEFFERSON
JOB NO.	J6I3110
CONTRACT ID.	
PROJECT NO.	
BRIDGE NO.	

DATE	DESCRIPTION

MISSOURI HIGHWAYS AND TRANSPORTATION COMMISSION
105 WEST CAPITOL
JEFFERSON CITY, MO 65102
1-888-ASK-MODOT (1-888-275-6636)

PAVEMENT MARKING & EROSION CONTROL
SHEET 30 OF 33

IF A SEAL IS PRESENT ON THIS SHEET IT HAS BEEN ELECTRONICALLY SEALED AND DATED.

DISCLAIMER
THE PROFESSIONAL WHOSE SIGNATURE AND PERSONAL SEAL APPEAR HEREON ASSUMES RESPONSIBILITY ONLY FOR WHAT APPEARS ON THIS PAGE, AND DISCLAIMS (PURSUANT TO SECTION 327.411 RSMO) SPECIFICATION, ESTIMATES, REPORTS, OR OTHER DOCUMENTS OR INSTRUMENTS NOT SEALED BY THE UNDERSIGNED PROFESSIONAL RELATING TO OR INTENDED TO BE USED FOR ANY PART OR PARTS OF THE PROJECT TO WHICH THIS PAGE REFERS.

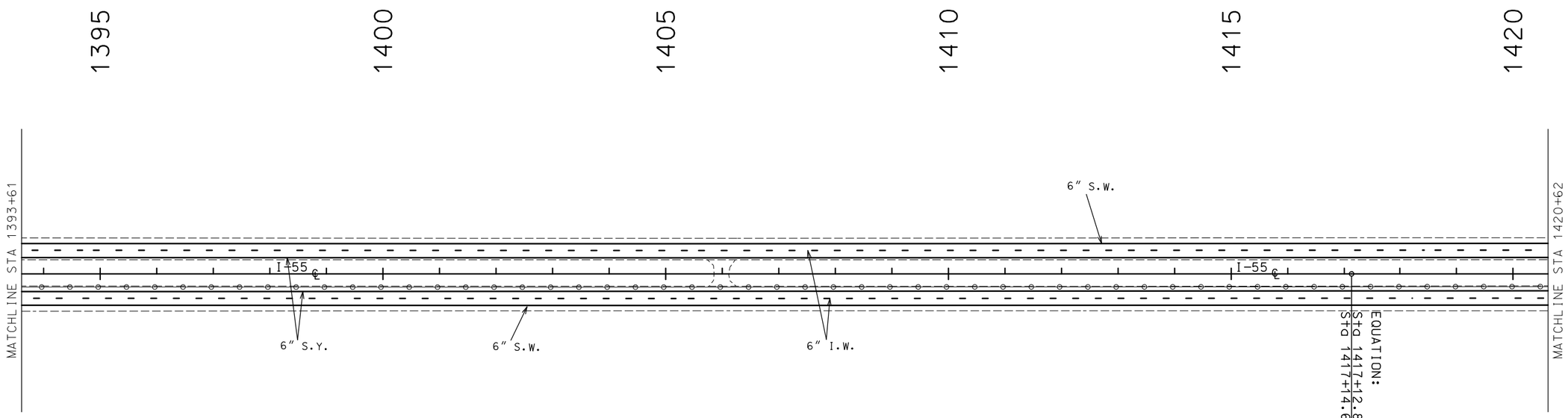

STRIPING LEGEND

———	6" S.W.	SOLID WHITE PAINT
- - - -	6" I.W.	INTERMITTENT WHITE PAINT
▬▬▬	12" S.W.	SOLID WHITE PAINT (GORE)
———	6" S.Y.	SOLID YELLOW PAINT

(ALL PAINT TO BE HIGH BUILD WATERBORNE PAVEMENT MARKING PAINT-TYPE L BEADS)

EROSION CONTROL LEGEND

SILT FENCE

SCALE
0 100 200 300 400 500

STATE OF MISSOURI
SHIRLEY J. NORRIS
NUMBER PE-28779
PROFESSIONAL ENGINEER
THIS SHEET HAS BEEN SIGNED, SEALED AND DATED ELECTRONICALLY.

DATE PREPARED	9/29/2016
ROUTE	I-55
STATE	MO
DISTRICT	SL
SHEET NO.	73
COUNTY	JEFFERSON
JOB NO.	J6I3110
CONTRACT ID.	
PROJECT NO.	
BRIDGE NO.	

DATE	DESCRIPTION

IF A SEAL IS PRESENT ON THIS SHEET IT HAS BEEN ELECTRONICALLY SEALED AND DATED.

MISSOURI HIGHWAYS AND TRANSPORTATION COMMISSION
105 WEST CAPITOL
JEFFERSON CITY, MO 65102
1-888-ASK-MODOT (1-888-275-6636)

PAVEMENT MARKING & EROSION CONTROL
SHEET 31 OF 33

DISCLAIMER
THE PROFESSIONAL WHOSE SIGNATURE AND PERSONAL SEAL APPEAR HEREON ASSUMES RESPONSIBILITY ONLY FOR WHAT APPEARS ON THIS PAGE, AND DISCLAIMS (PURSUANT TO SECTION 327.411 RSMO) SPECIFICATION, ESTIMATES, REPORTS, OR OTHER DOCUMENTS OR INSTRUMENTS NOT SEALED BY THE UNDERSIGNED PROFESSIONAL RELATING TO OR INTENDED TO BE USED FOR ANY PART OR PARTS OF THE PROJECT TO WHICH THIS PAGE REFERS.

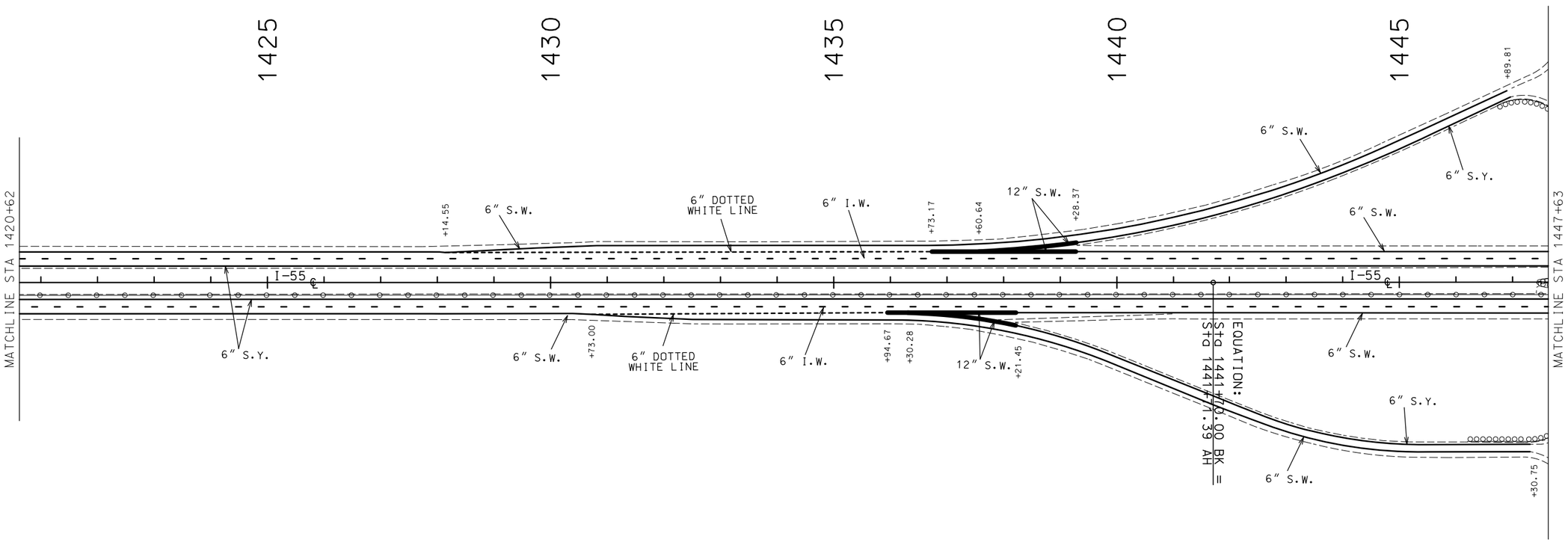

STRIPING LEGEND

———	6" S.W.	SOLID WHITE PAINT
- - - -	6" I.W.	INTERMITTENT WHITE PAINT
▬▬▬	12" S.W.	SOLID WHITE PAINT (GORE)
———	6" S.Y.	SOLID YELLOW PAINT
- - - - - -	6" D.W.L.	DOTTED WHITE LINE PAINT

(ALL PAINT TO BE HIGH BUILD WATERBORNE PAVEMENT MARKING PAINT-TYPE L BEADS)

EROSION CONTROL LEGEND

SILT FENCE

SCALE
0 100 200 300 400 500

STATE OF MISSOURI
SHIRLEY J. NORRIS
NUMBER PE-28779
PROFESSIONAL ENGINEER
THIS SHEET HAS BEEN SIGNED, SEALED AND DATED ELECTRONICALLY.

DATE PREPARED	9/29/2016
ROUTE	I-55
STATE	MO
DISTRICT	SL
SHEET NO.	74
COUNTY	JEFFERSON
JOB NO.	J6I3110
CONTRACT ID.	
PROJECT NO.	
BRIDGE NO.	

DATE	DESCRIPTION

MISSOURI HIGHWAYS AND TRANSPORTATION COMMISSION
105 WEST CAPITOL
JEFFERSON CITY, MO 65102
1-888-ASK-MODOT (1-888-275-6636)

PAVEMENT MARKING & EROSION CONTROL
SHEET 32 OF 33

IF A SEAL IS PRESENT ON THIS SHEET IT HAS BEEN ELECTRONICALLY SEALED AND DATED.

DISCLAIMER
THE PROFESSIONAL WHOSE SIGNATURE AND PERSONAL SEAL APPEAR HEREON ASSUMES RESPONSIBILITY ONLY FOR WHAT APPEARS ON THIS PAGE, AND DISCLAIMS (PURSUANT TO SECTION 327.411 RSMO) SPECIFICATION, ESTIMATES, REPORTS, OR OTHER DOCUMENTS OR INSTRUMENTS NOT SEALED BY THE UNDERSIGNED PROFESSIONAL RELATING TO OR INTENDED TO BE USED FOR ANY PART OR PARTS OF THE PROJECT TO WHICH THIS PAGE REFERS.

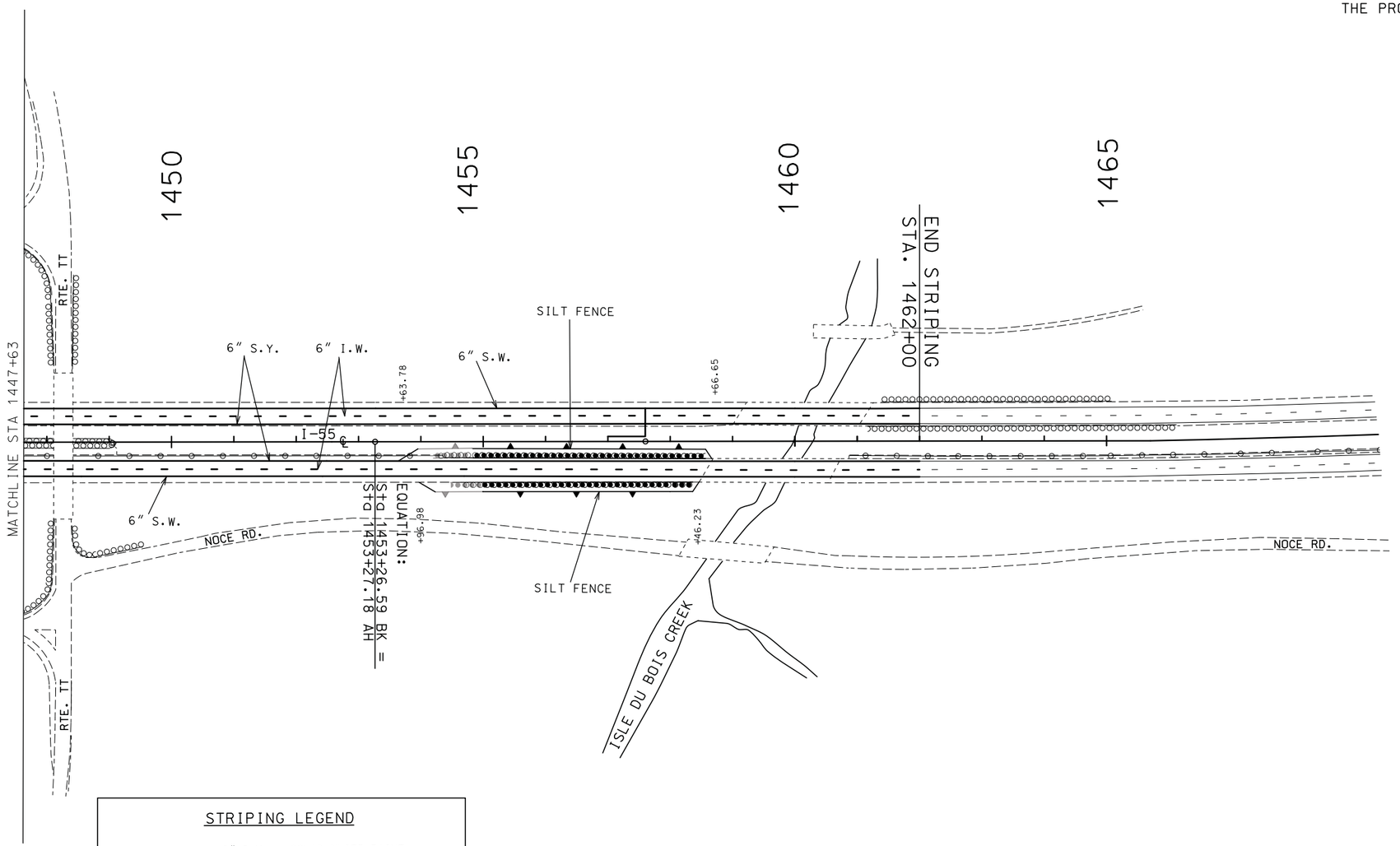

STRIPING LEGEND

———	6" S.W.	SOLID WHITE PAINT
- - - -	6" I.W.	INTERMITTENT WHITE PAINT
▬▬▬	12" S.W.	SOLID WHITE PAINT (GORE)
———	6" S.Y.	SOLID YELLOW PAINT

(ALL PAINT TO BE HIGH BUILD WATERBORNE PAVEMENT MARKING PAINT-TYPE L BEADS)

EROSION CONTROL LEGEND

▼——▼ SILT FENCE

SCALE

0 100 200 300 400 500

STATE OF MISSOURI
SHIRLEY J. NORRIS
NUMBER PE-28779
PROFESSIONAL ENGINEER
THIS SHEET HAS BEEN SIGNED, SEALED AND DATED ELECTRONICALLY.

DATE PREPARED	9/29/2016
ROUTE	I-55
STATE	MO
DISTRICT	SL
SHEET NO.	75
COUNTY	JEFFERSON
JOB NO.	J6I3110
CONTRACT ID.	
PROJECT NO.	
BRIDGE NO.	

DATE	DESCRIPTION

IF A SEAL IS PRESENT ON THIS SHEET IT HAS BEEN ELECTRONICALLY SEALED AND DATED.

MISSOURI HIGHWAYS AND TRANSPORTATION COMMISSION
105 WEST CAPITOL
JEFFERSON CITY, MO 65102
1-888-ASK-MODOT (1-888-275-6636)

PAVEMENT MARKING & EROSION CONTROL
SHEET 33 OF 33

EFFECTIVE 01-01-2003

SIGNS					PIPE POST					STRUCTURAL STEEL POSTS						BACKING BARS 2" X 3/8" BARS @ 2.55 LBS PER LIN FT				TOTAL ITEM NO. 903-12.10	U-CHANNEL POST ITEM NO. 903-12.50	WOOD POSTS			PERF. STEEL SQ.		BREAKAWAY ASSEMBLY	CONC FTG'S EMBD ITEM NO. 903-10.10	CONC FTG'S BOLT DOWN ITEM NO. 903-10.20	HORZ CLEAR IF NOT STD	DELINEATORS, MILEPOSTS, CONDUIT, CONDUCTOR CABLE, TRENCHING AND BACKFILLING. CONTROL STATION, PULL BOXES AND OTHER REQUIRED ITEMS.
SIGN NO.	STATION	SIGN DTL. SHT. NO.	LOCATION	SIGN SIZE	PIPE SIZE	POST NO. 1	POST NO. 2	LBS PER FT	TOTAL ITEM NO. 903-12.20	POST DES NO.	POST NO. 1	POST NO. 2	POST NO. 3	LBS PER FT	TOTAL	NO. EACH	LGTH IN.	TOTAL LIN FT	TOTAL LBS	LBS	LIN FT	4"X4" ITEM NO. 903-12.60	4"X6" ITEM NO. 903-12.61	6"X6" ITEM NO. 903-12.62	POSTS ITEM NO. 903-12.70	ANCHOR SLEEVE ITEM NO. 903-12.71	EACH	CU YDS	CU YDS		
					IN.	LIN FT	LIN FT		LBS		LIN FT	LIN FT	LIN FT		LBS			LIN FT	LBS			LIN FT	LIN FT	LIN FT	LIN FT	LIN FT					
1	633+85		I-55 SB	48x48	4	18.25		10.79	196.92							2	32	5.33	13.59								1	0.36			
2	655+97		I-55 SB	48x96						1	20.00	20.50		9	364.50												2	0.32			
3	668+96		I-55 SB	132x60						1	17.50	19.00		9	328.50												2	0.32			
4	706+44		I-55 SB	96x36																											
5	731+51		I-55 SB	48x60																											
6	734+74		I-55 SB	72x84						1	17.75	18.25		9	324.00												2	0.32			
7	750+93		I-55 SB	48x48	4	18.25		10.79	196.92							2	32	5.33	13.59								1	0.36			
8	776+05		I-55 SB	48x60																											
9	782+25		I-55 SB	60x36																											
10	875+85		I-55 SB	ASSEMBLY						4	25.25	24.75	25.00	22	1650.00												3	4.17			
11	880+31		I-55 SB	48x60																											
12	882+54		I-55 SB	72x84						1	17.00	17.00		9	306.00												2	0.32			
13	903+29		I-55 SB	48x48	4	18.25		10.79	196.92							2	32	5.33	13.59								1	0.36			
14	917+35		I-55 SB	156x108						2	22.50	24.25		15	701.25												2	1.02			
15	941+35		I-55 SB	ASSEMBLY																											
16	942+72		I-55 SB	72x84						1	18.00	18.00		9	324.00												2	0.32			
17	949+70		I-55 SB	48x48	4	18.50		10.79	199.62							2	32	5.33	13.59								1	0.36			
18	958+59		I-55 SB	ASSEMBLY																											
19	965+94		I-55 SB	48x48	4	18.50		10.79	199.62							2	32	5.33	13.59								1	0.36			
20	1001+55		I-55 SB	132x60						1	17.50	17.50		9	315.00												2	0.32			
21	1097+92		I-55 SB	ASSEMBLY						2	23.75	25.00		15	731.25												2	1.02			
22	1124+94		I-55 SB	ASSEMBLY						4	29.50	31.25		22	1336.50												2	2.78			
23	1134+75		I-55 SB	48x60																											
24	1135+32		I-55 SB	72x84						1	19.00	20.00		9	351.00												2	0.32			
25	1155+16		I-55 SB	48x48																											
26	1156+52		I-55 SB	48x48	4	18.25		10.79	196.92							2	32	5.33	13.59								1	0.36			
27	1187+00		I-55 SB	48x96						1	20.00	20.50		9	364.50												2	0.32			
28	1193+72		I-55 SB	132x60						1	17.25	19.00		9	326.25												2	0.32			
29	1458+26		I-55 SB	108x48						1	16.25	17.50		9	303.75												2	0.32			
30	1461+55		I-55 NB	72x48						1	16.00	17.00		9	297.00												2	0.32			
31	1413+14		I-55 NB	48x96						1	20.00	20.50		9	364.50												2	0.32			
32	1194+90		I-55 NB	ASSEMBLY						1	22.75	24.25		9	423.00												2	0.32			
33	1175+93		I-55 NB	48x48	4	20.00		10.79	215.80							2	32	5.33	13.59								1	0.36			
34	1161+92		I-55 NB	ASSEMBLY						2	24.75	26.00		15	761.25												2	1.02			
35	1153+00		I-55 NB	48x60	2.5	17.50	18.00	5.79	205.55																		2	0.26			
36	1138+30		I-55 NB	48x48	4	18.25		10.79	196.92							2	32	5.33	13.59								1	0.36			
37	1117+90		I-55 NB	48x96						1	20.00	20.50		9	364.50												2	0.32			
38	1102+87		I-55 NB	120x60						1	16.50	17.50		9	306.00												2	0.32			
39	1038+08		I-55 NB	96x36																											
40	1022+90		I-55 NB	ASSEMBLY						5	30.00	32.25		26	1618.50												2	2.86			
41	982+48		I-55 NB	156x108						2	22.25	24.25		15	697.50												2	1.02			
42	970+52		I-55 NB	ASSEMBLY																											
43	968+92		I-55 NB	72x84						1	18.00	18.25		9	326.25												2	0.32			
44	960+57		I-55 NB	48x48	4	18.25		10.79	196.92							2	32	5.33	13.59								1	0.36			
45	951+50		I-55 NB	48x60																											
46	951+30		I-55 NB	ASSEMBLY																											
47	950+04		I-55 NB	72x84																											
48	943+56		I-55 NB	48x48	4	18.50		10.79	199.62							2	32	5.33	13.59								1	0.36			
49	929+16		I-55 NB	ASSEMBLY						6	29.75	34.25		35	2240.00												2	3.12			
50	916+00		I-55 NB	48x60																											
51	911+15		I-55 NB	ASSEMBLY						5	25.75	28.00	32.75	26	2249.00												3	4.56			
52	906+50		I-55 NB	48x60																											
53	904+31		I-55 NB	72x84																											
54	883+30		I-55 NB	48x48	4	18.25		10.79	196.92							2	32	5.33	13.59								1	0.36			
55	855+83		I-55 NB	48x60																											
56	846+33		I-55 NB	108x60						1	17.75	19.75		9	337.50												2	0.32			
57	782+13		I-55 NB	96x36																											
58	752+95		I-55 NB	48x60																											
59	751+18		I-55 NB	72x84																											
60	735+94		I-55 NB	48x48	4	18.75		10.79	202.31							2	32	5.33	13.59								1	0.36			
61	710+24		I-55 NB	48x96						1	20.00	20.50		9	364.50												2	0.32			
62	699+57		I-55 NB	84x48																											
63	698+91		I-55 NB	60x36						1	15.75	16.75		9	292.50												2	0.32			
64	689+78		I-55 NB	ASSEMBLY						4	25.75	30.25		22	1232.00												2	2.90			
65	640+20		I-55 NB	ASSEMBLY						4	24.00	29.25		22	1171.50												2	2.90			
66	636+00		I-55 NB	48x60																											
67	634+20		I-55 NB	72x84																											
						SUBTOTAL		2601							20772.00				163.1	20935.1								38.03			
						TOTAL		2600												20940							✳	38			

DISCLAIMER
THE PROFESSIONAL WHOSE SIGNATURE AND PERSONAL SEAL APPEAR HEREON ASSUMES RESPONSIBILITY ONLY FOR WHAT APPEARS ON THIS PAGE, AND DISCLAIMS (PURSUANT TO SECTION 327.411 RSMO) SPECIFICATION, ESTIMATES, REPORTS, OR OTHER DOCUMENTS OR INSTRUMENTS NOT SEALED BY THE UNDERSIGNED PROFESSIONAL RELATING TO OR INTENDED TO BE USED FOR ANY PART OR PARTS OF THE PROJECT TO WHICH THIS PAGE REFERS.

✳ BREAKAWAY ASSEMBLY IS INCIDENTAL
SHOW FOR INFORMATIONAL USE ONLY

D-29

STATE OF MISSOURI
SHIRLEY J. NORRIS
NUMBER PE-28779
PROFESSIONAL ENGINEER
THIS SHEET HAS BEEN SIGNED, SEALED AND DATED ELECTRONICALLY.

DATE PREPARED 9/29/2016
ROUTE I-55 | STATE MO
DISTRICT SL | SHEET NO. 76
COUNTY JEFFERSON
JOB NO. J6I3110
CONTRACT ID.
PROJECT NO.
BRIDGE NO.

DESCRIPTION | DATE

MISSOURI HIGHWAYS AND TRANSPORTATION COMMISSION
105 WEST CAPITOL
JEFFERSON CITY, MO 65102
1-888-ASK-MODOT (1-888-275-6636)

SIGNING SHEETS
SHEET 1 OF 14

IF A SEAL IS PRESENT ON THIS SHEET IT HAS BEEN ELECTRONICALLY SEALED AND DATED.

EFFECTIVE 10-01-2016

STANDARD SIGN ASSEMBLIES

SIGN NUMBER	STATION	LOCATION	W4-1R 48"x48"	R2-4a 48"x96"	W13-2 48"x60"	R2-1 48"x60"	W13-2 48"x60"	W8-14 48"x48"	W13-2 48"x60"									
			TYPE															
			SIGN DESCRIPTION, SIZES & NUMBER OF EACH															
				SPEED LIMIT 70 MINIMUM 40	EXIT 40 MPH	SPEED LIMIT 70	EXIT 30 MPH	FALLEN ROCKS	EXIT 25 MPH									
1	633+85	I-55 SB	1															
2	655+97	I-55 SB		1														
5	731+51	I-55 SB			1													
7	750+93	I-55 SB	1															
8	776+05	I-55 SB				1												
11	880+31	I-55 SB			1													
13	903+29	I-55 SB	1															
15	941+35	I-55 SB			1													
17	949+70	I-55 SB	1															
18	958+59	I-55 SB					1											
19	965+94	I-55 SB	1															
23	1134+75	I-55 SB			1													
25	1155+16	I-55 SB						1										
26	1156+52	I-55 SB	1															
27	1187+00	I-55 SB		1														
31	1413+14	I-55 NB		1														
33	1175+93	I-55 NB						1										
35	1153+00	I-55 NB			1													
36	1138+30	I-55 NB	1															
37	1117+90	I-55 NB		1														
42	970+52	I-55 NB							1									
44	960+57	I-55 NB	1															
45	951+50	I-55 NB							1									
48	943+56	I-55 NB	1															
50	916+00	I-55 NB				1												
52	906+50	I-55 NB			1													
54	883+30	I-55 NB	1															
55	855+83	I-55 NB				1												
58	752+95	I-55 NB			1													
60	735+94	I-55 NB	1															
61	710+24	I-55 NB		1														
66	636+00	I-55 NB			1													
		SUBTOTALS	11	5	8	3	1	2	2									

DISCLAIMER
THE PROFESSIONAL WHOSE SIGNATURE AND PERSONAL SEAL APPEAR HEREON ASSUMES RESPONSIBILITY ONLY FOR WHAT APPEARS ON THIS PAGE, AND DISCLAIMS (PURSUANT TO SECTION 327.411 RSMO) SPECIFICATION, ESTIMATES, REPORTS, OR OTHER DOCUMENTS OR INSTRUMENTS NOT SEALED BY THE UNDERSIGNED PROFESSIONAL RELATING TO OR INTENDED TO BE USED FOR ANY PART OR PARTS OF THE PROJECT TO WHICH THIS PAGE REFERS.

SIGN SUMMARY

STANDARD SIGN OR SPECIAL SIGN NUMBER	SIGN DETAIL SHEET NO.	NO. EACH	SIZE, TYPE & SQUARE FEET: SIZE	FLAT SHEET SH ITEM NO. 9035004	FLAT SHEET FLUORESCENT FSF * ITEM NO. 9035069	STRUCTURAL ST ITEM NO. 9035011	STRUCTURAL FLUORESCENT STF * ITEM NO. 9035071
MERGE RIGHT W4-1R	STANDARD	11	48 x 48		176.0		
COMBINATION SPEED LIMIT R2-4a	STANDARD	5	48 x 96	160.0			
EXIT SPEED LIMIT 40 W13-2	STANDARD	8	48 x 60		160.0		
SPEED LIMIT 70 R2-1	STANDARD	3	48 x 60	60.0			
EXIT SPEED LIMIT 30 W13-2	STANDARD	1	48 x 60		20.0		
FALLEN ROCKS W8-14	STANDARD	2	48 x 48		32.0		
EXIT SPEED LIMIT 25 W13-2	STANDARD	2	48 x 60		40.0		
D2-3 (SPECIAL SIGN) #3	10	1	132 x 60			55.0	
I4-2a (SPECIAL SIGN) #4	10	1	96 x 36			24.0	
E5-1a (SPECIAL SIGN) #6	10	1	72 x 84			42.0	
I4-2a (SPECIAL SIGN) #9	10	1	60 x 36			15.0	
E1-5P (SPECIAL SIGN) #10	11	1	108 x 30			22.5	
E1-1 (SPECIAL SIGN) #10	11	1	216 x 132			198.0	
E5-1a (SPECIAL SIGN) #12	11	1	72 x 84			42.0	
E4-3 (SPECIAL SIGN) #14	11	1	156 x 108			117.0	
E6-2a (SPECIAL SIGN) #15	12	1	216 x 96			144.0	
E1-5P (SPECIAL SIGN) #15	12	1	132 x 30			27.5	
E1-1 (SPECIAL SIGN) #15	12	1	180 x 120			150.0	
E1-5P (SPECIAL SIGN) #15	12	1	132 x 30			27.5	
E1-1 (SPECIAL SIGN) #15	12	1	180 x 120			150.0	
E5-1a (SPECIAL SIGN) #16	13	1	72 x 84			42.0	
E1-5P (SPECIAL SIGN) #18	13	1	132 x 30			27.5	
E1-1 (SPECIAL SIGN) #18	13	1	228 x 96			152.0	
D2-3 (SPECIAL SIGN) #20	13	1	132 x 60			55.0	
E1-5P (SPECIAL SIGN) #21	13	1	108 x 30			22.5	
E1-1 (SPECIAL SIGN) #21	13	1	108 x 96			72.0	
E1-5P (SPECIAL SIGN) #22	14	1	108 x 30			22.5	
E1-1 (SPECIAL SIGN) #22	14	1	108 x 108			81.0	
D5-7 (SPECIAL SIGN) #22	14	1	108 x 48			36.0	
E5-1a (SPECIAL SIGN) #24	14	1	72 x 84			42.0	
D2-3 (SPECIAL SIGN) #28	14	1	132 x 60			55.0	
I6-1 (SPECIAL SIGN) #29	14	1	108 x 48			36.0	
I6-1 (SPECIAL SIGN) #30	3	1	72 x 48			24.0	
E1-5P (SPECIAL SIGN) #32	3	1	108 x 30			22.5	
E1-1 (SPECIAL SIGN) #32	3	1	108 x 96			72.0	
E1-5P (SPECIAL SIGN) #34	3	1	108 x 30			22.5	
E1-1 (SPECIAL SIGN) #34	3	1	108 x 108			81.0	
D2-3 (SPECIAL SIGN) #38	3	1	120 x 60			50.0	
I4-2a (SPECIAL SIGN) #39	4	1	96 x 36			24.0	
E1-5P (SPECIAL SIGN) #40	4	1	168 x 30			35.0	
E1-1 (SPECIAL SIGN) #40	4	1	180 x 156			195.0	
E4-3 (SPECIAL SIGN) #41	4	1	156 x 108			117.0	
E1-5P (SPECIAL SIGN) #42	5	1	132 x 30			27.5	
E1-1 (SPECIAL SIGN) #42	5	1	228 x 96			152.0	
E1-5P (SPECIAL SIGN) #42	5	1	132 x 30			27.5	
E1-1 (SPECIAL SIGN) #42	5	1	168 x 120			140.0	
E6-2a (SPECIAL SIGN) #42	5	1	144 x 96			96.0	
E5-1a (SPECIAL SIGN) #43	5	1	72 x 84			42.0	
E1-5P (SPECIAL SIGN) #46	6	1	132 x 30			27.5	
E1-1 (SPECIAL SIGN) #46	6	1	216 x 96			144.0	
E5-1a (SPECIAL SIGN) #47	6	1	72 x 84			42.0	
I4-2a (SPECIAL SIGN) #49	6	1	60 x 36			15.0	
E1-5P (SPECIAL SIGN) #49	7	1	108 x 30			22.5	
E1-1 (SPECIAL SIGN) #49	7	1	168 x 168			196.0	
E1-5P (SPECIAL SIGN) #51	7	1	108 x 30			22.5	
E1-1 (SPECIAL SIGN) #51	7	1	216 x 132			198.0	
E5-1a (SPECIAL SIGN) #53	7	1	72 x 84			42.0	
D2-3 (SPECIAL SIGN) #56	8	1	108 x 60			45.0	
I4-2a (SPECIAL SIGN) #57	8	1	96 x 36			24.0	
E5-1a (SPECIAL SIGN) #59	8	1	72 x 84			42.0	
I4-2a (SPECIAL SIGN) #63	8	1	60 x 36			15.0	
E1-5P (SPECIAL SIGN) #64	9	1	108 x 30			22.5	
E1-1 (SPECIAL SIGN) #64	9	1	144 x 132			132.0	
E1-5P (SPECIAL SIGN) #65	9	1	108 x 30			22.5	
E1-1 (SPECIAL SIGN) #65	9	1	180 x 108			135.0	
E5-1a (SPECIAL SIGN) #67	9	1	72 x 84			42.0	
			TOTAL	220.0	428.0	3975.5	
				220	428	3976	

* ORANGE, YELLOW & YELLOW/GREEN

STATE OF MISSOURI
SHIRLEY J. NORRIS
NUMBER PE-28779
PROFESSIONAL ENGINEER
THIS SHEET HAS BEEN SIGNED, SEALED AND DATED ELECTRONICALLY.

DATE PREPARED 9/29/2016
ROUTE I-55 | STATE MO
DISTRICT SL | SHEET NO. 77
COUNTY JEFFERSON
JOB NO. J6I3110
CONTRACT ID.
PROJECT NO.
BRIDGE NO.

DATE	DESCRIPTION

IF A SEAL IS PRESENT ON THIS SHEET IT HAS BEEN ELECTRONICALLY SEALED AND DATED.

MISSOURI HIGHWAYS AND TRANSPORTATION COMMISSION
105 WEST CAPITOL
JEFFERSON CITY, MO 65102
1-888-ASK-MODOT (1-888-275-6636)

SIGNING SHEETS
SHEET 2 OF 14

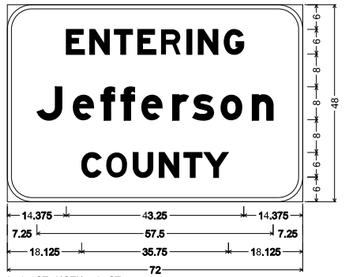

I6-1 STRUCTURAL ST;
6.000" Radius, 1.000" Border, White on Green;
[ENTERING] E Mod; [Jefferson] E Mod;
[COUNTY] E Mod;
Table of letter and object lefts.

E 14.375	N 20.125	T 26.125	E 31.750	R 37.500	I 43.750	N 46.500	G 52.875

J 7.250	e 16.000	f 22.750	f 27.625	e 32.625	r 40.250	s 45.125	o 52.000	n 59.625

C 18.125	O 24.125	U 30.625	N 37.000	T 43.000	Y 47.875

SIGN NO.	30
STATION	1461+55
ROADWAY	I-55 NORTHBOUND

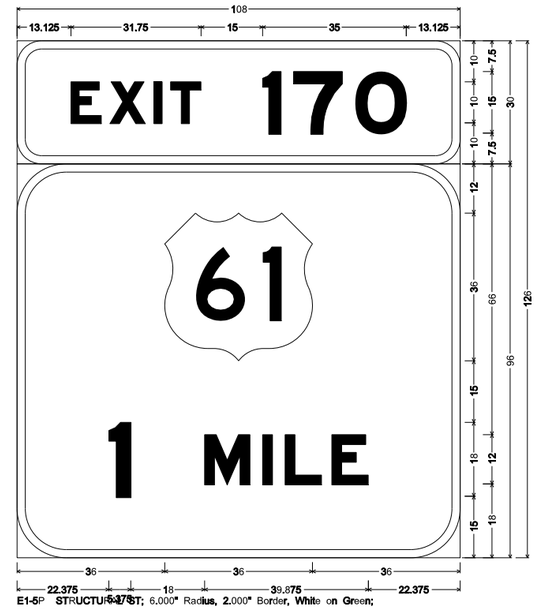

E1-5P STRUCTURAL ST; 6.000" Radius, 2.000" Border, White on Green;
[EXIT] E Mod; [170] E Mod;
E1-1 STRUCTURAL ST; 12.000" Radius, 2.000" Border, White on Green;
[1] E Mod; [MILE] E Mod;
Table of letter and object lefts.

E 13.125	X 22.625	I 33.375	T 37.375	I 59.875	7 67.375	O 82.500

36.000

1 22.375	M 45.750	I 59.875	L 65.375	E 76.750

SIGN NO.	32
STATION	1194+90
ROADWAY	I-55 NORTHBOUND

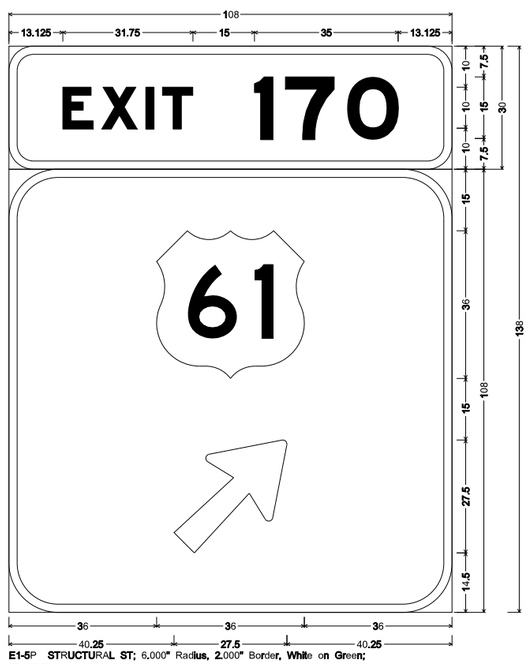

E1-5P STRUCTURAL ST; 6.000" Radius, 2.000" Border, White on Green;
[EXIT] E Mod; [170] E Mod;
E1-1 STRUCTURAL ST; 12.000" Radius, 2.000" Border, White on Green;
Arrow 160 - 35.000" 45°;
Table of letter and object lefts.

E 13.125	X 22.625	I 33.375	T 37.375	1 59.875	7 67.375	O 82.500

36.000
40.250

SIGN NO.	34
STATION	1161+92
ROADWAY	I-55 NORTHBOUND

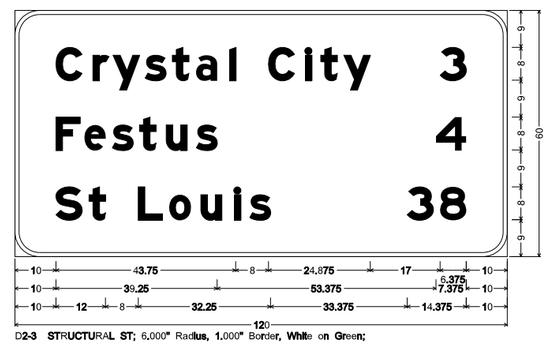

D2-3 STRUCTURAL ST; 6.000" Radius, 1.000" Border, White on Green;
[Crystal City] E Mod; [3] E Mod; [Festus] E Mod; [4] E Mod; [St Louis] E Mod; [38] E Mod;
Table of letter and object lefts.

C 10.000	r 19.000	y 23.875	s 31.750	t 38.375	a 44.125	l 52.250	C 61.750	i 70.750	t 74.500	y 80.125	3 103.625	
F 10.000	e 17.000	s 23.750	t 30.375	u 36.875	s 44.250	4 102.625						
S 10.000	t 18.000	L 30.000	o 37.625	u 45.375	i 53.500	s 57.250	3 95.625	8 103.625				

SIGN NO.	38
STATION	1102+87
ROADWAY	I-55 NORTHBOUND

DISCLAIMER
THE PROFESSIONAL WHOSE SIGNATURE AND PERSONAL SEAL APPEAR HEREON ASSUMES RESPONSIBILITY ONLY FOR WHAT APPEARS ON THIS PAGE, AND DISCLAIMS (PURSUANT TO SECTION 327.411 RSMO) SPECIFICATION, ESTIMATES, REPORTS, OR OTHER DOCUMENTS OR INSTRUMENTS NOT SEALED BY THE UNDERSIGNED PROFESSIONAL RELATING TO OR INTENDED TO BE USED FOR ANY PART OR PARTS OF THE PROJECT TO WHICH THIS PAGE REFERS.

STATE OF MISSOURI
SHIRLEY J. NORRIS
NUMBER PE-28779
PROFESSIONAL ENGINEER
THIS SHEET HAS BEEN SIGNED, SEALED AND DATED ELECTRONICALLY.

DATE PREPARED 9/29/2016
ROUTE I-55 | STATE MO
DISTRICT SL | SHEET NO. 78
COUNTY JEFFERSON
JOB NO. J6I3110
CONTRACT ID.
PROJECT NO.
BRIDGE NO.

DESCRIPTION	DATE

IF A SEAL IS PRESENT ON THIS SHEET IT HAS BEEN ELECTRONICALLY SEALED AND DATED.

MISSOURI HIGHWAYS AND TRANSPORTATION COMMISSION
105 WEST CAPITOL
JEFFERSON CITY, MO 65102
1-888-ASK-MODOT (1-888-275-6636)

SIGNING SHEETS
SHEET 3 OF 14

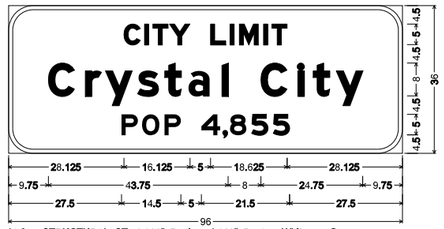

E4-2a STRUCTURAL ST; 6.000" Radius, 1.000" Border, White on Green;
[CITY LIMIT] E Mod; [Crystal City] E Mod; [POP 4,855] E Mod;
Table of letter and object lefts.

C 28.125	I 33.125	T 35.125	Y 39.250	L 49.250	I 54.000	M 56.250	I 62.125	T 64.125	
C 9.750	r 18.750	y 23.625	s 31.375	t 38.125	a 43.875	I 52.000			
	C 61.500	I 70.500	t 74.250	y 79.875					
P 27.500	O 32.500	P 38.000	4 47.000	, 52.250	8 54.000	5 59.250	5 64.500		

SIGN NO.	39
STATION	1038+08
ROADWAY	I-55 NORTHBOUND

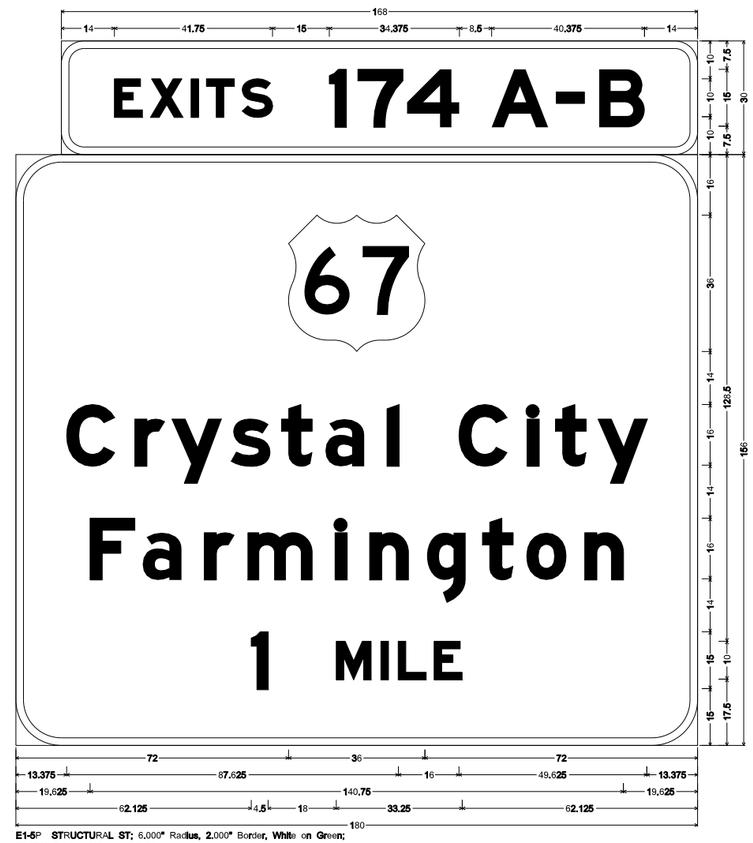

E1-5P STRUCTURAL ST; 6.000" Radius, 2.000" Border, White on Green;
[EXITS] E Mod; [174 A-B] E Mod;
E1-1 STRUCTURAL ST; 12.000" Radius, 2.000" Border, White on Green;
[Crystal City] E Mod; [Farmington] E Mod; [1] E Mod; [MILE] E Mod;
Table of letter and object lefts.

E 14.000	X 23.500	I 34.250	T 38.250	S 47.750	! 70.750	7 78.250	4 91.250	A 113.625	- 130.625	B 142.000	
67 72.000											
C 13.375	r 31.375	y 41.250	s 56.875	t 70.125	a 81.750	I 98.000	C 117.000	I 135.000	t 142.500	y 153.750	
F 19.625	a 33.500	r 49.750	m 61.250	I 84.250	n 93.375	q 108.500	t 123.250	o 134.750	n 150.250		
1 62.125	M 84.625	I 96.375	L 101.000	E 110.375							

SIGN NO.	40
STATION	1022+90
ROADWAY	I-55 NORTHBOUND

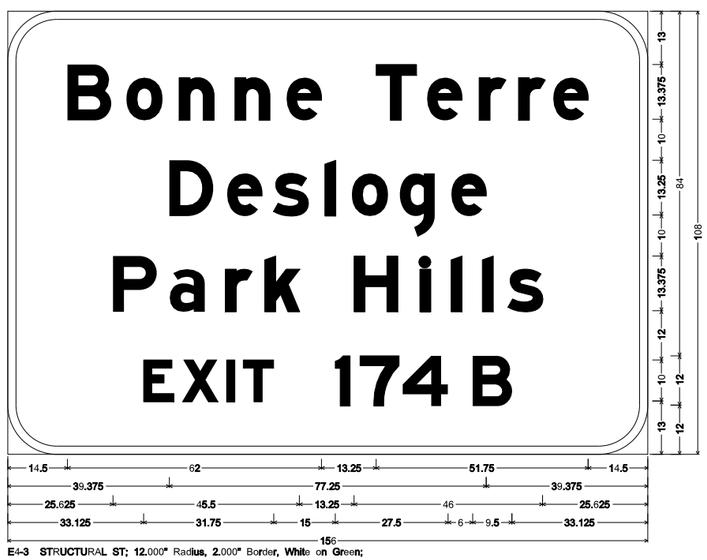

E4-3 STRUCTURAL ST; 12.000" Radius, 2.000" Border, White on Green;
[Bonne Terre] E Mod; [Desloge] E Mod; [Park Hills] E Mod; [EXIT] E Mod; [174 B] E Mod;
Table of letter and object lefts.

B 14.500	o 28.875	n 41.750	n 55.375	e 68.000	T 89.750	e 102.250	r 114.875	r 124.500	e 133.000		
D 39.375	e 53.500	s 64.750	l 77.250	o 83.875	g 95.500	e 108.125					
P 25.625	a 39.500	r 53.000	k 62.625	H 84.375	l 100.500	l 108.000	l 115.625	s 121.875			
E 33.125	X 42.625	I 53.375	T 57.375	1 79.875	7 85.875	4 96.250	B 113.375				

SIGN NO.	41
STATION	982+48
ROADWAY	I-55 NORTHBOUND

DISCLAIMER
THE PROFESSIONAL WHOSE SIGNATURE AND PERSONAL SEAL APPEAR HEREON ASSUMES RESPONSIBILITY ONLY FOR WHAT APPEARS ON THIS PAGE, AND DISCLAIMS (PURSUANT TO SECTION 327.411 RSMO) SPECIFICATION, ESTIMATES, REPORTS, OR OTHER DOCUMENTS OR INSTRUMENTS NOT SEALED BY THE UNDERSIGNED PROFESSIONAL RELATING TO OR INTENDED TO BE USED FOR ANY PART OR PARTS OF THE PROJECT TO WHICH THIS PAGE REFERS.

STATE OF MISSOURI
SHIRLEY J. NORRIS
NUMBER PE-28779
PROFESSIONAL ENGINEER
THIS SHEET HAS BEEN SIGNED, SEALED AND DATED ELECTRONICALLY.

DATE PREPARED 9/29/2016

ROUTE	STATE
I-55	MO
DISTRICT	SHEET NO.
SL	79

COUNTY JEFFERSON
JOB NO. J6I3110
CONTRACT ID.
PROJECT NO.
BRIDGE NO.

DATE	DESCRIPTION

IF A SEAL IS PRESENT ON THIS SHEET IT HAS BEEN ELECTRONICALLY SEALED AND DATED.

MISSOURI HIGHWAYS AND TRANSPORTATION COMMISSION
105 WEST CAPITOL
JEFFERSON CITY, MO 65102
1-888-ASK-MODOT (1-888-275-6636)

SIGNING SHEETS
SHEET 4 OF 14

SIGN NO.	42
STATION	970+52
ROADWAY	I-55 NORTHBOUND

E6-2a STRUCTURAL ST; 12.000" Radius, 2.000" Border, White on Green;
[NORTH] E Mod; [St Louis] E Mod;
Table of letter and object lefts.

N 15.750	N 66.750	O 82.125	R 95.250	T 107.250	H 118.750
S 19.750	t 35.875	L 59.875	o 75.000	u 90.375	I 106.625	s 114.125

SIGN NO.	42
STATION	970+52
ROADWAY	I-55 NORTHBOUND

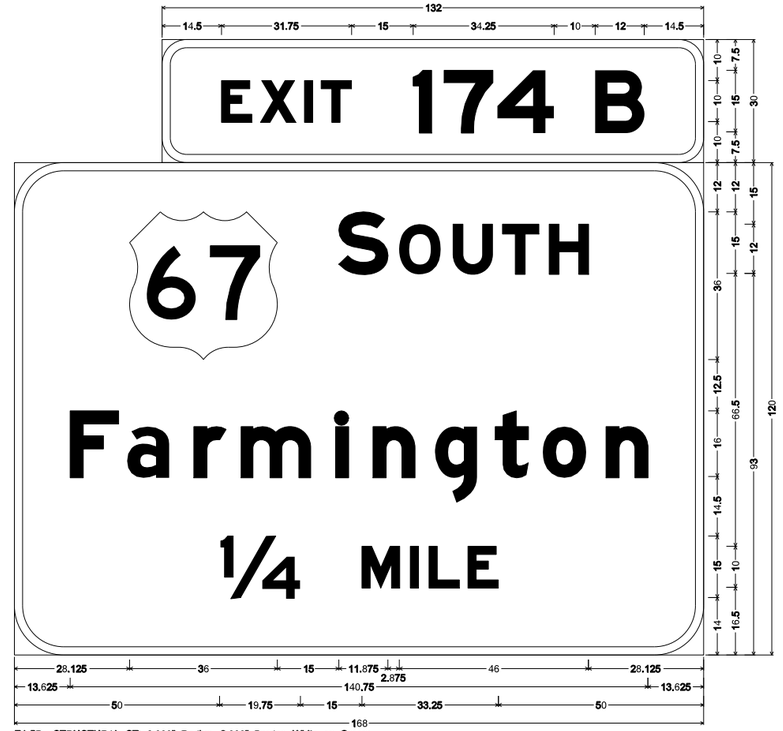

E1-5P STRUCTURAL ST; 6.000" Radius, 2.000" Border, White on Green;
[EXIT 174 B] E Mod;
E1-1 STRUCTURAL ST; 12.000" Radius, 2.000" Border, White on Green;
[SOUTH] E Mod; [Farmington] E Mod; [¼] E Mod; [MILE] E Mod;
Table of letter and object lefts.

E 14.500	X 24.000	I 34.750	T 38.750	I 61.250	7 68.750	4 81.750	B 105.500
F 28.125	S 79.125	O 93.875	U 106.875	T 119.000	H 130.375		
F 13.625	a 27.500	r 43.750	m 55.250	I 78.250	n 87.375	g 102.500	t 117.250	o 128.750	n 144.250
¼ 50.000	M 84.750	I 96.500	L 101.125	E 110.500			

SIGN NO.	42
STATION	970+52
ROADWAY	I-55 NORTHBOUND

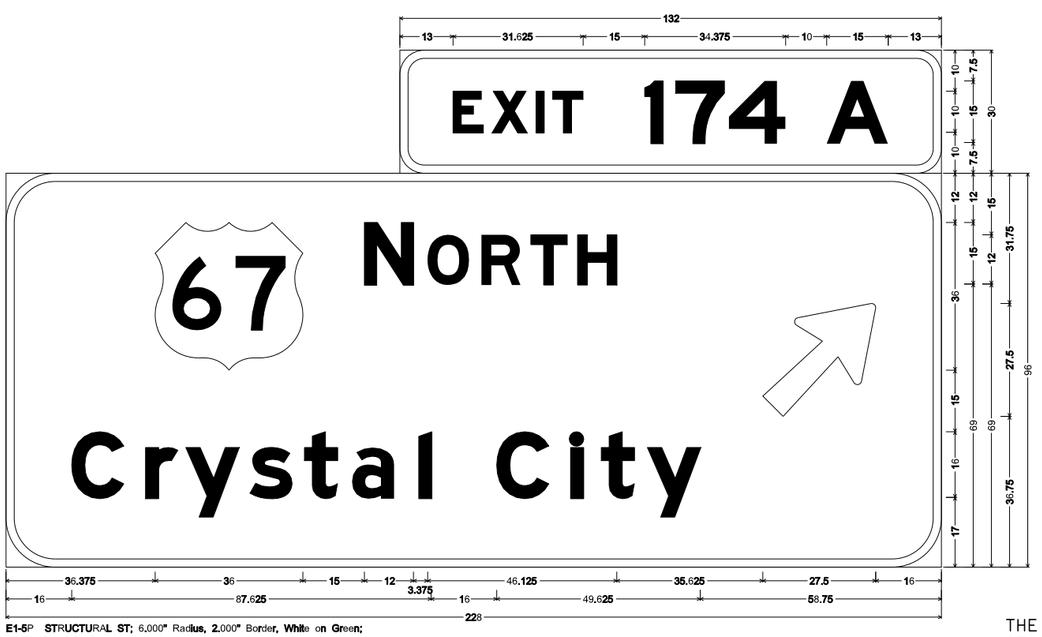

E1-5P STRUCTURAL ST; 6.000" Radius, 2.000" Border, White on Green;
[EXIT 174 A] E Mod;
E1-1 STRUCTURAL ST; 12.000" Radius, 2.000" Border, White on Green;
[NORTH] E Mod; [Crystal City] E Mod; Arrow 160 - 35.000" 45°;
Table of letter and object lefts.

E 13.000	X 22.500	I 33.125	T 37.250	1 59.625	7 67.250	4 80.250	A 104.000	
N 36.375	N 87.375	O 102.750	R 115.875	T 127.875	H 139.250	184.500		
C 16.000	r 34.000	y 43.875	s 59.500	t 72.750	a 84.375	l 100.625	C 119.625	I 137.625	t 145.125	y 156.375

SIGN NO.	43
STATION	968+92
ROADWAY	I-55 NORTHBOUND

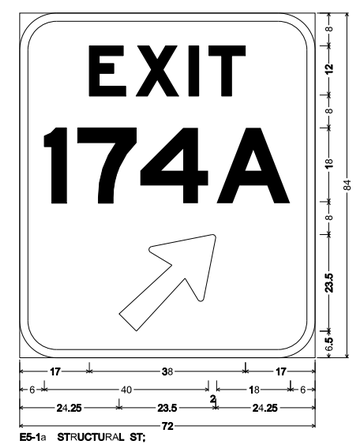

E5-1a STRUCTURAL ST;
9.000" Radius, 2.000" Border, White on Green;
[EXIT] E Mod; [174 A] E Mod 75% spacing;
Arrow 133 - 30.000" 45°;
Table of letter and object lefts.

E 17.000	X 28.375	I 41.250	T 46.125
1 6.000	7 14.125	4 29.375	A 48.000
24.250			

DISCLAIMER
THE PROFESSIONAL WHOSE SIGNATURE AND PERSONAL SEAL APPEAR HEREON ASSUMES RESPONSIBILITY ONLY FOR WHAT APPEARS ON THIS PAGE, AND DISCLAIMS (PURSUANT TO SECTION 327.411 RSMO) SPECIFICATION, ESTIMATES, REPORTS, OR OTHER DOCUMENTS OR INSTRUMENTS NOT SEALED BY THE UNDERSIGNED PROFESSIONAL RELATING TO OR INTENDED TO BE USED FOR ANY PART OR PARTS OF THE PROJECT TO WHICH THIS PAGE REFERS.

STATE OF MISSOURI
SHIRLEY J. NORRIS
NUMBER PE-28779
PROFESSIONAL ENGINEER
THIS SHEET HAS BEEN SIGNED, SEALED AND DATED ELECTRONICALLY.

DATE PREPARED	9/29/2016
ROUTE I-55	STATE MO
DISTRICT SL	SHEET NO. 80
COUNTY	JEFFERSON
JOB NO.	J6I3110
CONTRACT ID.	
PROJECT NO.	
BRIDGE NO.	

DATE	DESCRIPTION

IF A SEAL IS PRESENT ON THIS SHEET IT HAS BEEN ELECTRONICALLY SEALED AND DATED.

MISSOURI HIGHWAYS AND TRANSPORTATION COMMISSION
105 WEST CAPITOL
JEFFERSON CITY, MO 65102
1-888-ASK-MODOT (1-888-275-6636)

SIGNING SHEETS
SHEET 5 OF 14

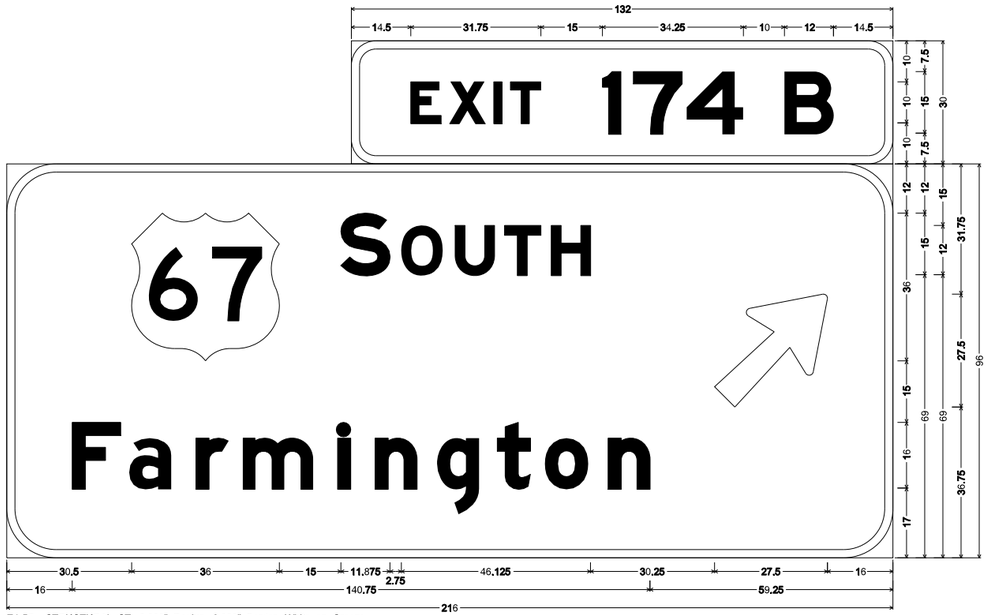

SIGN NO.	46
STATION	951+30
ROADWAY	I-55 NORTHBOUND

E1-5P STRUCTURAL ST; 6.000" Radius, 2.000" Border, White on Green;
[EXIT 174 B] E Mod;
E1-1 STRUCTURAL ST; 12.000" Radius, 2.000" Border, White on Green;
[SOUTH] E Mod; [Farmington] E Mod; Arrow 160 - 35.000" 45°;
Table of letter and object lefts.

E 14.500	X 24.000	I 34.750	T 38.750	I 51.250	7 68.750	4 81.750	B 105.500	
67 30.500	S 81.500	O 96.125	U 109.250	T 121.375	H 132.750	172.500		
F 16.000	a 29.875	r 46.125	m 57.625	I 80.625	n 89.750	q 104.875	t 119.625	o 131.125	n 146.625

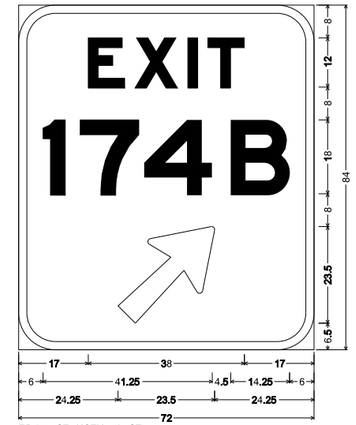

SIGN NO.	47
STATION	950+04
ROADWAY	I-55 NORTHBOUND

E5-1a STRUCTURAL ST;
9.000" Radius, 2.000" Border, White on Green;
[EXIT] E Mod; [174 B] E Mod; Arrow 133 - 30.000" 45°;
Table of letter and object lefts.

E 17.000	X 28.375	I 41.250	T 46.125
I 6.000	7 15.000	4 30.625	B 51.750
24.250			

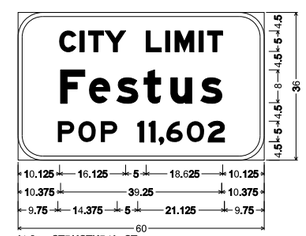

SIGN NO.	49
STATION	929+16
ROADWAY	I-55 NORTHBOUND

I4-2a STRUCTURAL ST;
6.000" Radius, 1.000" Border, White on Green;
[CITY LIMIT] E Mod; [Festus] E Mod;
[POP 11,602] E Mod;
Table of letter and object lefts.

C 10.125	I 15.125	T 17.125	Y 21.250			
	L 31.250	I 36.000	M 38.250	I 44.125	T 46.125	
F 10.375	e 17.250	s 24.125	t 30.750	u 37.250	s 44.625	
P 9.750	O 14.750	P 20.125				
	1 29.125	1 31.875	, 34.500	6 36.125	0 41.125	2 46.375

DISCLAIMER
THE PROFESSIONAL WHOSE SIGNATURE AND PERSONAL SEAL APPEAR HEREON ASSUMES RESPONSIBILITY ONLY FOR WHAT APPEARS ON THIS PAGE, AND DISCLAIMS (PURSUANT TO SECTION 327.411 RSMO) SPECIFICATION, ESTIMATES, REPORTS, OR OTHER DOCUMENTS OR INSTRUMENTS NOT SEALED BY THE UNDERSIGNED PROFESSIONAL RELATING TO OR INTENDED TO BE USED FOR ANY PART OR PARTS OF THE PROJECT TO WHICH THIS PAGE REFERS.

STATE OF MISSOURI
SHIRLEY J. NORRIS
NUMBER PE-28779
PROFESSIONAL ENGINEER
THIS SHEET HAS BEEN SIGNED, SEALED AND DATED ELECTRONICALLY.

DATE PREPARED	9/29/2016
ROUTE	I-55
STATE	MO
DISTRICT	SL
SHEET NO.	81
COUNTY	JEFFERSON
JOB NO.	J6I3110
CONTRACT ID.	
PROJECT NO.	
BRIDGE NO.	

DESCRIPTION
DATE

MISSOURI HIGHWAYS AND TRANSPORTATION COMMISSION
105 WEST CAPITOL
JEFFERSON CITY, MO 65102
1-888-ASK-MODOT (1-888-275-6636)

SIGNING SHEETS
SHEET 6 OF 14

IF A SEAL IS PRESENT ON THIS SHEET IT HAS BEEN ELECTRONICALLY SEALED AND DATED.

SIGN NO.	49
STATION	929+16
ROADWAY	I-55 NORTHBOUND

E1-5P STRUCTURAL ST; 6.000" Radius, 2.000" Border, White on Green;
[EXIT] E Mod; [175] E Mod;
E1-1 STRUCTURAL ST; 12.000" Radius, 2.000" Border, White on Green;
Rounded Rectangle 1.875" Radius;
[Hillsboro] E Mod; [Festus] E Mod; [1/2] E Mod; [MILE] E Mod;
Table of letter and object lefts.

E 13.375	X 22.875	I 33.625	T 37.625	I 60.125	7 67.625	5 82.625
☐ 69.000						

H 15.375	I 39.500	I 50.875	I 62.250	s 71.625	b 90.375	o 107.500	r 126.750	o 139.500	
F 34.875	c 52.250	s 69.250	t 85.750	u 102.125	s 120.375				
1/2 42.500	M 85.625	I 99.750	L 105.250	E 116.625					

SIGN NO.	51
STATION	911+15
ROADWAY	I-55 NORTHBOUND

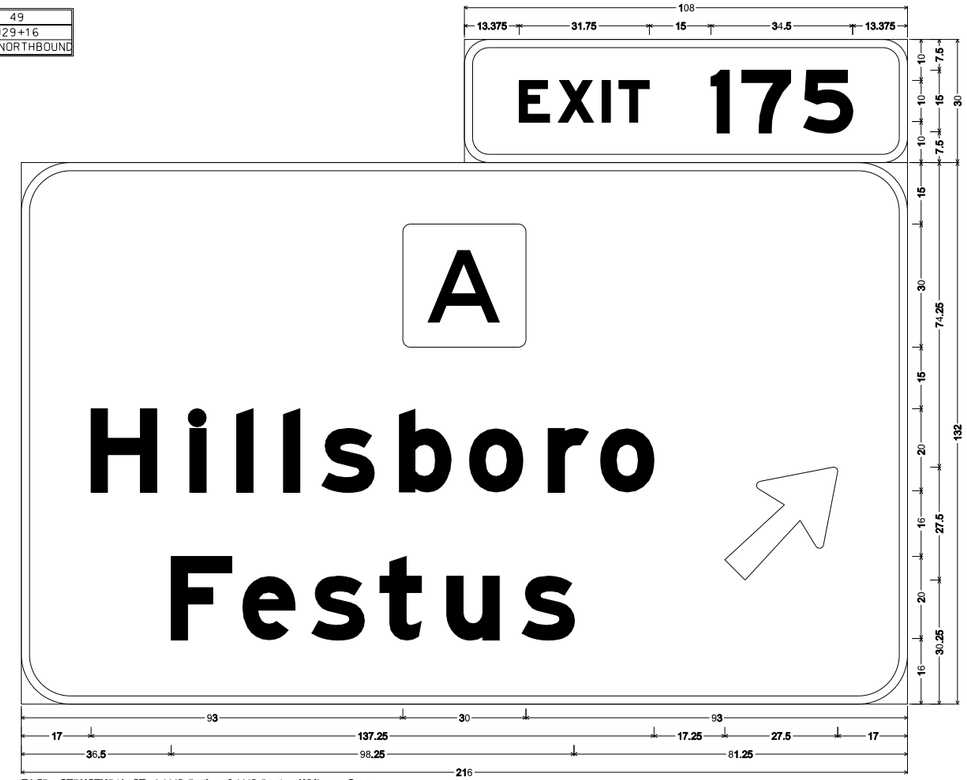

E1-5P STRUCTURAL ST; 6.000" Radius, 2.000" Border, White on Green;
[EXIT] E Mod; [175] E Mod;
E1-1 STRUCTURAL ST; 12.000" Radius, 2.000" Border, White on Green;
Rounded Rectangle 1.875" Radius;
[Hillsboro] E Mod; [Festus] E Mod; Arrow 160 - 35.000" 45°;
Table of letter and object lefts.

E 13.375	X 22.875	I 33.625	T 37.625	I 60.125	7 67.625	5 82.625
☐ 93.000						

H 17.000	I 41.125	I 52.500	I 63.875	s 73.250	b 92.000	o 109.125	r 128.375	o 141.125	↗ 171.500
F 36.500	c 53.875	s 70.875	t 87.375	u 103.750	s 122.000				

SIGN NO.	53
STATION	904+31
ROADWAY	I-55 NORTHBOUND

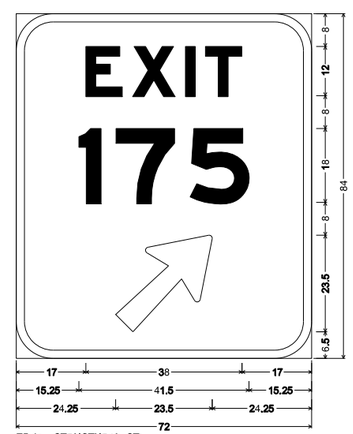

E5-1a STRUCTURAL ST;
9.000" Radius, 2.000" Border, White on Green;
[EXIT] E Mod; [175] E Mod; Arrow 133 - 30.000" 45°;
Table of letter and object lefts.

E 17.000	X 28.375	I 41.250	T 46.125
1 15.250	7 24.375	5 42.375	
↗ 24.250			

DISCLAIMER
THE PROFESSIONAL WHOSE SIGNATURE AND PERSONAL SEAL APPEAR HEREON ASSUMES RESPONSIBILITY ONLY FOR WHAT APPEARS ON THIS PAGE, AND DISCLAIMS (PURSUANT TO SECTION 327.411 RSMO) SPECIFICATION, ESTIMATES, REPORTS, OR OTHER DOCUMENTS OR INSTRUMENTS NOT SEALED BY THE UNDERSIGNED PROFESSIONAL RELATING TO OR INTENDED TO BE USED FOR ANY PART OR PARTS OF THE PROJECT TO WHICH THIS PAGE REFERS.

STATE OF MISSOURI
SHIRLEY J. NORRIS
NUMBER PE-28779
PROFESSIONAL ENGINEER

THIS SHEET HAS BEEN SIGNED, SEALED AND DATED ELECTRONICALLY.

DATE PREPARED 9/29/2016

ROUTE	STATE
I-55	MO
DISTRICT	SHEET NO.
SL	82

COUNTY JEFFERSON
JOB NO. J6I3110
CONTRACT ID.
PROJECT NO.
BRIDGE NO.

DATE	DESCRIPTION

IF A SEAL IS PRESENT ON THIS SHEET IT HAS BEEN ELECTRONICALLY SEALED AND DATED.

MISSOURI HIGHWAYS AND TRANSPORTATION COMMISSION
105 WEST CAPITOL
JEFFERSON CITY, MO 65102
1-888-ASK-MODOT (1-888-275-6636)

SIGNING SHEETS
SHEET 7 OF 14

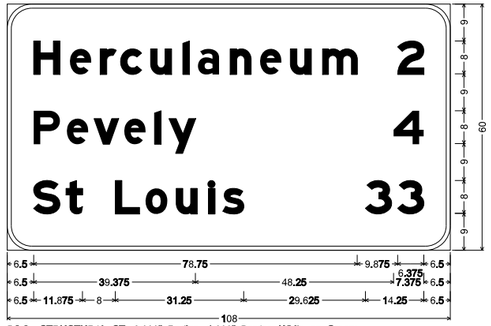

D2-3 STRUCTURAL ST; 6.000" Radius, 1.000" Border, White on Green;
[Herculaneum] E Mod 90% spacing; [2] E Mod; [Pevely] E Mod 90% spacing;
[4] E Mod; [St Louis] E Mod 90% spacing; [33] E Mod 90% spacing;
Table of letter and object lefts.

H 6.500	e 15.250	r 22.625	c 27.625	u 35.000	l 42.750	a 46.500	n 54.375	e 61.625	u 69.000	m 76.875	
2 95.125											
P 6.500	e 14.500	v 21.125	e 28.500	l 35.875	y 39.375	4 94.125					
S 6.500	t 14.375	L 26.375	o 33.750	u 41.250	l 49.000	s 52.625	3 87.250	3 95.125			

SIGN NO.	56
STATION	846+33
ROADWAY	I-55 NORTHBOUND

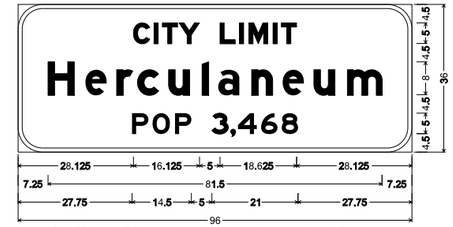

I4-2a STRUCTURAL ST; 6.000" Radius, 1.000" Border, White on Green;
[CITY LIMIT] E Mod; [Herculaneum] E Mod; [POP 3,468] E Mod;
Table of letter and object lefts.

C 28.125	I 33.125	T 35.125	Y 39.250	L 49.250	I 54.000	M 56.250	I 62.125	T 64.125					
H 7.250	e 16.375	r 24.000	c 29.125	u 36.625	l 44.875	a 48.750	n 56.875	e 64.500	u 72.125	m 80.250			
P 27.750	O 32.750	P 38.250	3 47.250	, 51.875	4 53.625	6 59.250	8 64.250						

SIGN NO.	57
STATION	782+13
ROADWAY	I-55 NORTHBOUND

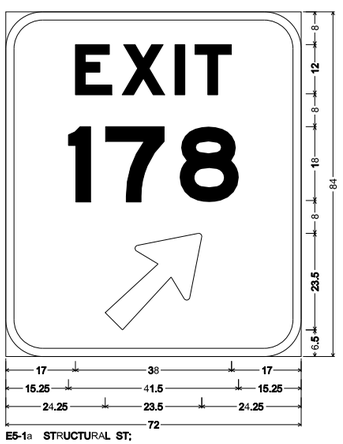

E5-1a STRUCTURAL ST;
9.000" Radius, 2.000" Border, White on Green;
[EXIT] E Mod; [178] E Mod; Arrow 133 - 30.000" 45°;
Table of letter and object lefts.

E 17.000	X 28.375	I 41.250	T 46.125
1 15.250	7 24.375	8 42.375	
24.250			

SIGN NO.	59
STATION	751+18
ROADWAY	I-55 NORTHBOUND

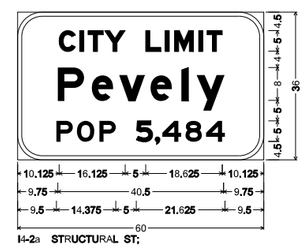

I4-2a STRUCTURAL ST;
6.000" Radius, 1.000" Border, White on Green;
[CITY LIMIT] E Mod; [Pevely] E Mod;
[POP 5,484] E Mod;
Table of letter and object lefts.

C 10.125	I 15.125	T 17.125	Y 21.250			
	L 31.250	I 36.000	M 38.250	I 44.125	T 46.125	
P 9.750	e 18.125	v 24.875	e 32.375	I 40.000	y 43.750	
P 9.500	O 14.500	P 20.000				
	5 28.875	, 33.625	4 35.250	8 40.875	4 45.875	

SIGN NO.	63
STATION	698+91
ROADWAY	I-55 NORTHBOUND

DISCLAIMER
THE PROFESSIONAL WHOSE SIGNATURE AND PERSONAL SEAL APPEAR HEREON ASSUMES RESPONSIBILITY ONLY FOR WHAT APPEARS ON THIS PAGE, AND DISCLAIMS (PURSUANT TO SECTION 327.411 RSMO) SPECIFICATION, ESTIMATES, REPORTS, OR OTHER DOCUMENTS OR INSTRUMENTS NOT SEALED BY THE UNDERSIGNED PROFESSIONAL RELATING TO OR INTENDED TO BE USED FOR ANY PART OR PARTS OF THE PROJECT TO WHICH THIS PAGE REFERS.

STATE OF MISSOURI
SHIRLEY J. NORRIS
NUMBER PE-28779
PROFESSIONAL ENGINEER
THIS SHEET HAS BEEN SIGNED, SEALED AND DATED ELECTRONICALLY.

DATE PREPARED	9/29/2016
ROUTE	I-55
STATE	MO
DISTRICT	SL
SHEET NO.	83
COUNTY	JEFFERSON
JOB NO.	J6I3110
CONTRACT ID.	
PROJECT NO.	
BRIDGE NO.	

DESCRIPTION	DATE

IF A SEAL IS PRESENT ON THIS SHEET IT HAS BEEN ELECTRONICALLY SEALED AND DATED.

MISSOURI HIGHWAYS AND TRANSPORTATION COMMISSION
105 WEST CAPITOL
JEFFERSON CITY, MO 65102
1-888-ASK-MODOT (1-888-275-6636)

SIGNING SHEETS
SHEET 8 OF 14

SIGN NO.	64
STATION	689+78
ROADWAY	I-55 NORTHBOUND

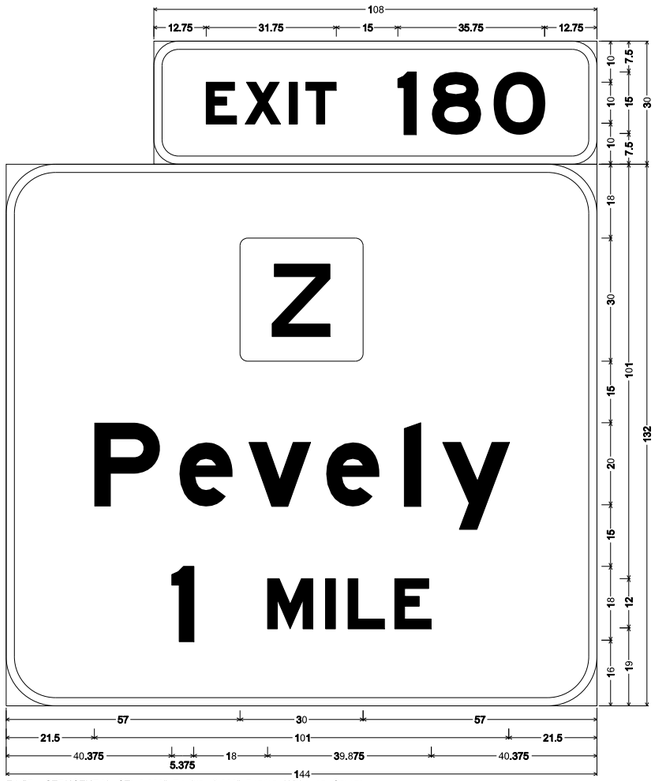

E1-5P STRUCTURAL ST; 6.000" Radius, 2.000" Border, White on Green;
[EXIT] E Mod; **[180] E** Mod;
E1-1 STRUCTURAL ST; 12.000" Radius, 2.000" Border, White on Green;
Rounded Rectangle 1.875" Radius;
[Pevely] E Mod; **[1] E** Mod; **[MILE] E** Mod;
Table of letter and object lefts.

E 12.750	X 22.250	I 33.000	T 37.000	I 59.500	8 67.750	O 82.875
57.000						
P 21.500	e 42.250	v 59.125	e 78.000	l 97.000	Y 106.375	
I 40.375	M 63.750	I 77.875	L 83.375	E 94.750		

SIGN NO.	65
STATION	640+20
ROADWAY	I-55 NORTHBOUND

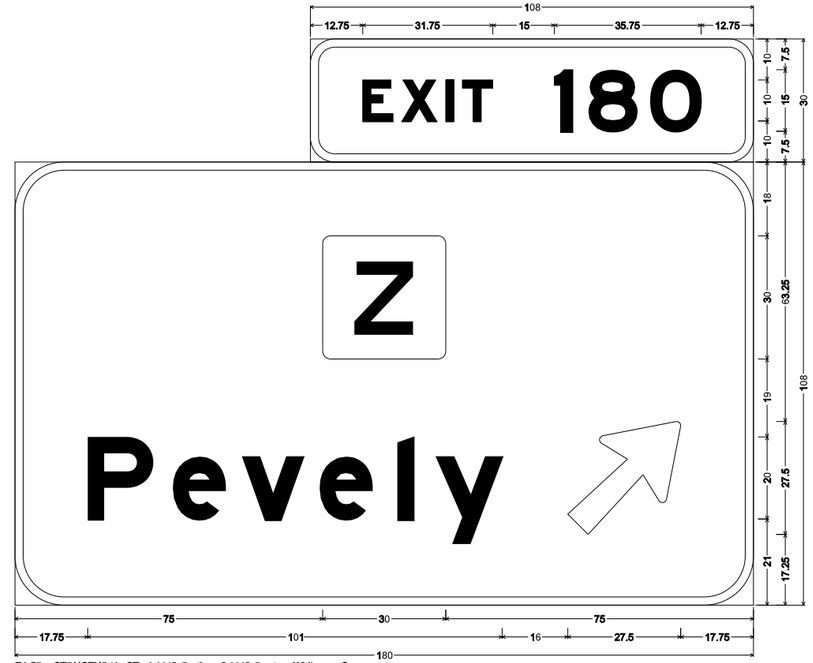

E1-5P STRUCTURAL ST; 6.000" Radius, 2.000" Border, White on Green;
[EXIT] E Mod; **[180] E** Mod;
E1-1 STRUCTURAL ST; 12.000" Radius, 2.000" Border, White on Green;
Rounded Rectangle 1.875" Radius;
[Pevely] E Mod; Arrow 160 - 35.000" 45°;
Table of letter and object lefts.

E 12.750	X 22.250	I 33.000	T 37.000	I 59.500	8 67.750	O 82.875
75.000						
P 17.750	e 38.500	v 55.375	e 74.250	l 93.250	Y 102.625	↗ 134.750

SIGN NO.	67
STATION	634+20
ROADWAY	I-55 NORTHBOUND

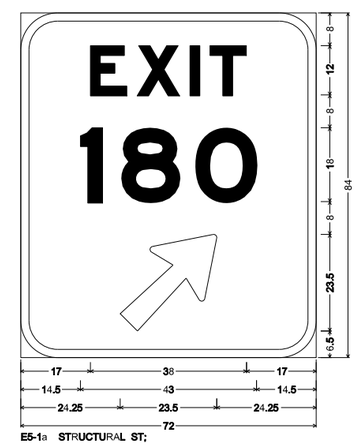

E5-1a STRUCTURAL ST;
9.000" Radius, 2.000" Border, White on Green;
[EXIT] E Mod; **[180] E** Mod; Arrow 133 - 30.000" 45°;
Table of letter and object lefts.

E 17.000	X 28.375	I 41.250	T 46.125
1 14.500	8 24.500	O 42.500	
↗ 24.250			

DISCLAIMER
THE PROFESSIONAL WHOSE SIGNATURE AND PERSONAL SEAL APPEAR HEREON ASSUMES RESPONSIBILITY ONLY FOR WHAT APPEARS ON THIS PAGE, AND DISCLAIMS (PURSUANT TO SECTION 327.411 RSMO) SPECIFICATION, ESTIMATES, REPORTS, OR OTHER DOCUMENTS OR INSTRUMENTS NOT SEALED BY THE UNDERSIGNED PROFESSIONAL RELATING TO OR INTENDED TO BE USED FOR ANY PART OR PARTS OF THE PROJECT TO WHICH THIS PAGE REFERS.

STATE OF MISSOURI
SHIRLEY J. NORRIS
NUMBER PE-28779
PROFESSIONAL ENGINEER
THIS SHEET HAS BEEN SIGNED, SEALED AND DATED ELECTRONICALLY.

DATE PREPARED 9/29/2016
ROUTE I-55 | STATE MO
DISTRICT SL | SHEET NO. 84
COUNTY JEFFERSON
JOB NO. J6I3110
CONTRACT ID.
PROJECT NO.
BRIDGE NO.

DATE	DESCRIPTION

IF A SEAL IS PRESENT ON THIS SHEET IT HAS BEEN ELECTRONICALLY SEALED AND DATED.

MISSOURI HIGHWAYS AND TRANSPORTATION COMMISSION
105 WEST CAPITOL
JEFFERSON CITY, MO 65102
1-888-ASK-MODOT (1-888-275-6636)

SIGNING SHEETS
SHEET 9 OF 14

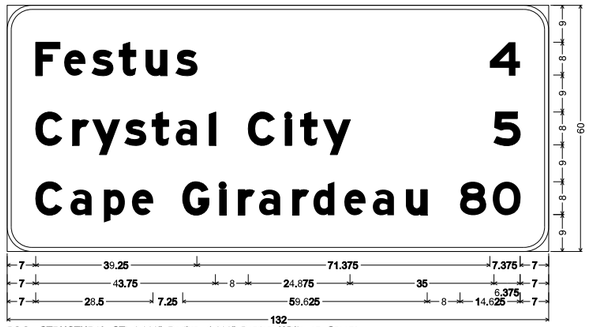

D2-3 STRUCTURAL ST; 6.000" Radius, 1.000" Border, White on Green;
[Festus] E Mod; [4] E Mod; [Crystal City] E Mod; [5] E Mod; [Cape Girardeau] E Mod; [80] E Mod;
Table of letter and object lefts.

F 7.000	e 13.875	s 20.750	t 27.375	u 33.875	s 41.125	4 117.625

C 7.000	r 16.000	y 20.875	s 28.750	t 35.375	a 41.125	l 49.250	C 58.750	l 67.750	t 71.500	y 77.125	5 118.625	

C 7.000	a 15.500	p 23.625	e 30.375	G 42.750	l 51.750	r 56.375	a 61.375	r 69.625	d 74.625	e 82.250	a 89.125	u 97.250	

8 110.375	0 118.375

SIGN NO.	3
STATION	668+96
ROADWAY	I-55 SOUTHBOUND

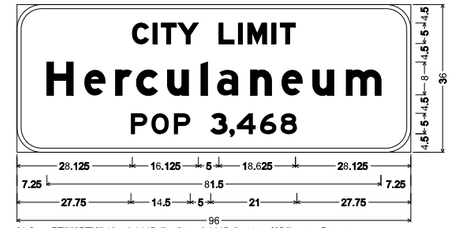

I4-2a STRUCTURAL; 6.000" Radius, 1.000" Border, White on Green;
[CITY LIMIT] E Mod; [Herculaneum] E Mod; [POP 3,468] E Mod;
Table of letter and object lefts.

C 28.125	I 33.125	T 35.125	Y 39.250	L 49.250	I 54.000	M 56.250	I 62.125	T 64.125	

H 7.250	e 16.375	r 24.000	c 29.125	u 36.625	l 44.875	a 48.750	n 56.875	e 64.500	u 72.125	m 80.250	

P 27.750	O 32.750	P 38.250	3 47.250	, 51.875	4 53.625	6 59.250	8 64.250	

SIGN NO.	4
STATION	706+44
ROADWAY	I-55 SOUTHBOUND

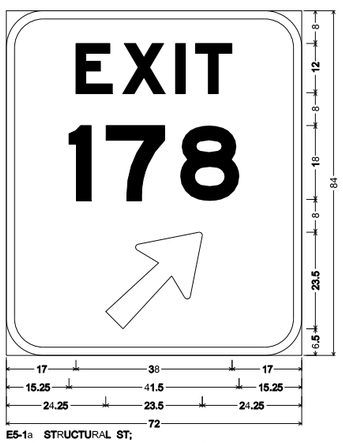

E5-1a STRUCTURAL ST;
9.000" Radius, 2.000" Border, White on Green;
[EXIT] E Mod; [178] E Mod; Arrow 133 - 30.000" 45°;
Table of letter and object lefts.

E 17.000	X 28.375	I 41.250	T 46.125

1 15.250	7 24.375	8 42.375

24.250

SIGN NO.	6
STATION	734+74
ROADWAY	I-55 SOUTHBOUND

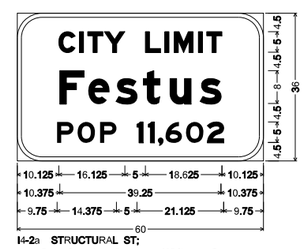

I4-2a STRUCTURAL ST;
6.000" Radius, 1.000" Border, White on Green;
[CITY LIMIT] E Mod; [Festus] E Mod;
[POP 11,602] E Mod;
Table of letter and object lefts.

C 10.125	I 15.125	T 17.125	Y 21.250

L 31.250	I 36.000	M 38.250	I 44.125	T 46.125

F 10.375	c 17.250	s 24.125	t 30.750	u 37.250	s 44.625

P 9.750	O 14.750	P 20.125

1 29.125	1 31.875	, 34.500	6 36.125	0 41.125	2 46.375

SIGN NO.	9
STATION	782+25
ROADWAY	I-55 SOUTHBOUND

DISCLAIMER
THE PROFESSIONAL WHOSE SIGNATURE AND PERSONAL SEAL APPEAR HEREON ASSUMES RESPONSIBILITY ONLY FOR WHAT APPEARS ON THIS PAGE, AND DISCLAIMS (PURSUANT TO SECTION 327.411 RSMO) SPECIFICATION, ESTIMATES, REPORTS, OR OTHER DOCUMENTS OR INSTRUMENTS NOT SEALED BY THE UNDERSIGNED PROFESSIONAL RELATING TO OR INTENDED TO BE USED FOR ANY PART OR PARTS OF THE PROJECT TO WHICH THIS PAGE REFERS.

STATE OF MISSOURI
SHIRLEY J. NORRIS
NUMBER PE-28779
PROFESSIONAL ENGINEER

THIS SHEET HAS BEEN SIGNED, SEALED AND DATED ELECTRONICALLY.

DATE PREPARED 9/29/2016

ROUTE	STATE
I-55	MO
DISTRICT	SHEET NO.
SL	85

COUNTY JEFFERSON
JOB NO. J6I3110
CONTRACT ID.
PROJECT NO.
BRIDGE NO.

DATE	DESCRIPTION

IF A SEAL IS PRESENT ON THIS SHEET IT HAS BEEN ELECTRONICALLY SEALED AND DATED.

MISSOURI HIGHWAYS AND TRANSPORTATION COMMISSION
105 WEST CAPITOL
JEFFERSON CITY, MO 65102
1-888-ASK-MODOT (1-888-275-6636)

SIGNING SHEETS
SHEET 10 OF 14

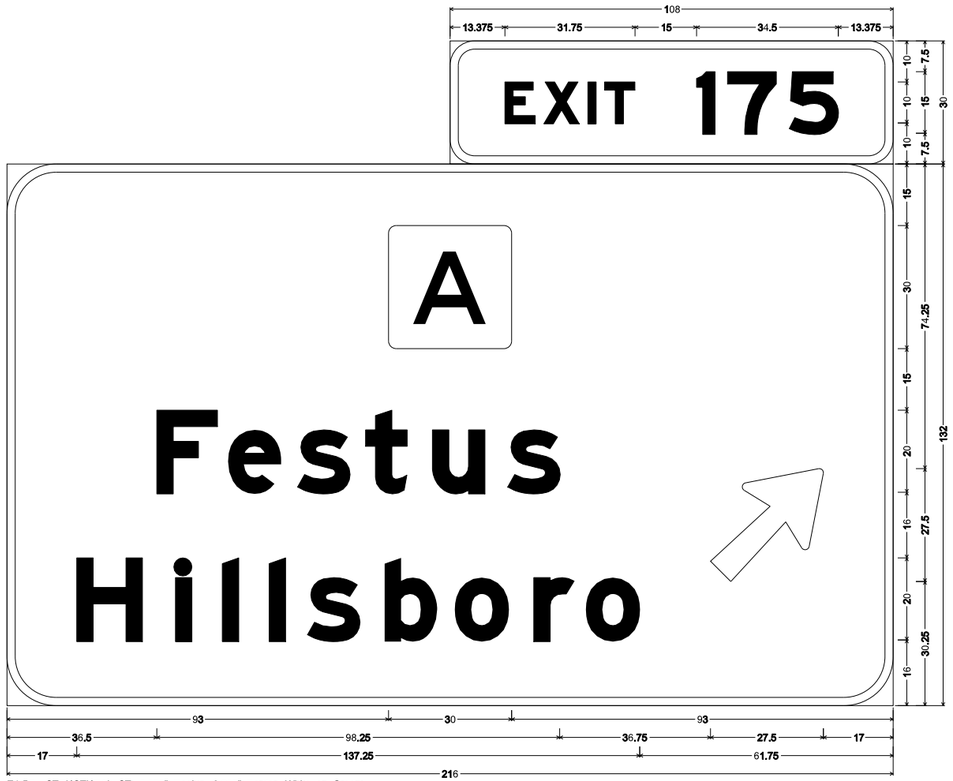

E1-5P STRUCTURAL ST; 6.000" Radius, 2.000" Border, White on Green;
[EXIT] E Mod; **[175] E** Mod;
E1-1 STRUCTURAL ST; 12.000" Radius, 2.000" Border, White on Green;
Rounded Rectangle 1.875" Radius;
[Festus] E Mod; **[Hillsboro] E** Mod; Arrow 160 - 35.000" 45°;
Table of letter and object lefts.

E 13.375	X 22.875	I 33.625	T 37.625	I 60.125	7 67.625	5 82.625

93.000

F 36.500	e 53.875	s 70.875	t 87.375	u 103.750	s 122.000	171.500

H 17.000	I 41.125	I 52.500	I 63.875	s 73.250	b 92.000	o 109.125	r 128.375	o 141.125

SIGN NO.	10
STATION	875+85
ROADWAY	I-55 SOUTHBOUND

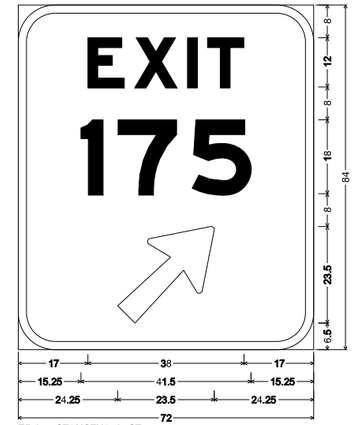

E5-1a STRUCTURAL ST;
9.000" Radius, 2.000" Border, White on Green;
[EXIT] E Mod; **[175] E** Mod; Arrow 133 - 30.000" 45°;
Table of letter and object lefts.

E 17.000	X 28.375	I 41.250	T 46.125

I 15.250	7 24.375	5 42.375

24.250

SIGN NO.	12
STATION	882+54
ROADWAY	I-55 SOUTHBOUND

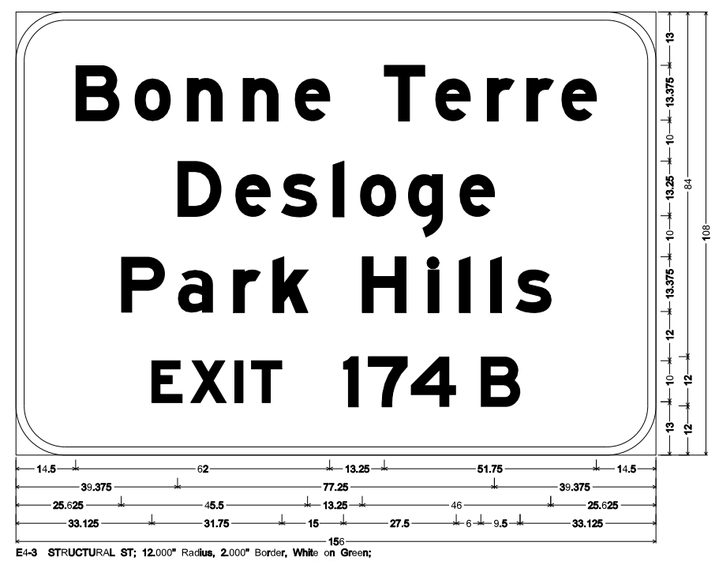

E4-3 STRUCTURAL ST; 12.000" Radius, 2.000" Border, White on Green;
[Bonne Terre] E Mod; **[Desloge] E** Mod; **[Park Hills] E** Mod; **[EXIT] E** Mod; **[174 B] E** Mod;
Table of letter and object lefts.

B 14.500	o 28.875	n 41.750	n 55.375	e 68.000	T 89.750	e 102.250	r 114.875	r 124.500	e 133.000	
D 39.375	e 53.500	s 64.750	l 77.250	o 83.875	g 95.500	e 108.125				
P 25.625	a 39.500	r 53.000	k 62.625	H 84.375	I 100.500	I 108.000	I 115.625	s 121.875		
E 33.125	X 42.625	I 53.375	T 57.375	I 79.875	7 85.875	4 96.250	B 113.375			

SIGN NO.	14
STATION	917+35
ROADWAY	I-55 SOUTHBOUND

DISCLAIMER
THE PROFESSIONAL WHOSE SIGNATURE AND PERSONAL SEAL APPEAR HEREON ASSUMES RESPONSIBILITY ONLY FOR WHAT APPEARS ON THIS PAGE, AND DISCLAIMS (PURSUANT TO SECTION 327.411 RSMO) SPECIFICATION, ESTIMATES, REPORTS, OR OTHER DOCUMENTS OR INSTRUMENTS NOT SEALED BY THE UNDERSIGNED PROFESSIONAL RELATING TO OR INTENDED TO BE USED FOR ANY PART OR PARTS OF THE PROJECT TO WHICH THIS PAGE REFERS.

STATE OF MISSOURI
SHIRLEY J. NORRIS
NUMBER PE-28779
PROFESSIONAL ENGINEER

THIS SHEET HAS BEEN SIGNED, SEALED AND DATED ELECTRONICALLY.

DATE PREPARED	9/29/2016
ROUTE I-55	STATE MO
DISTRICT SL	SHEET NO. 86
COUNTY	JEFFERSON
JOB NO.	J6I3110
CONTRACT ID.	
PROJECT NO.	
BRIDGE NO.	

DATE	DESCRIPTION

IF A SEAL IS PRESENT ON THIS SHEET IT HAS BEEN ELECTRONICALLY SEALED AND DATED.

MISSOURI HIGHWAYS AND TRANSPORTATION COMMISSION
105 WEST CAPITOL
JEFFERSON CITY, MO 65102
1-888-ASK-MODOT (1-888-275-6636)

SIGNING SHEETS
SHEET 11 OF 14

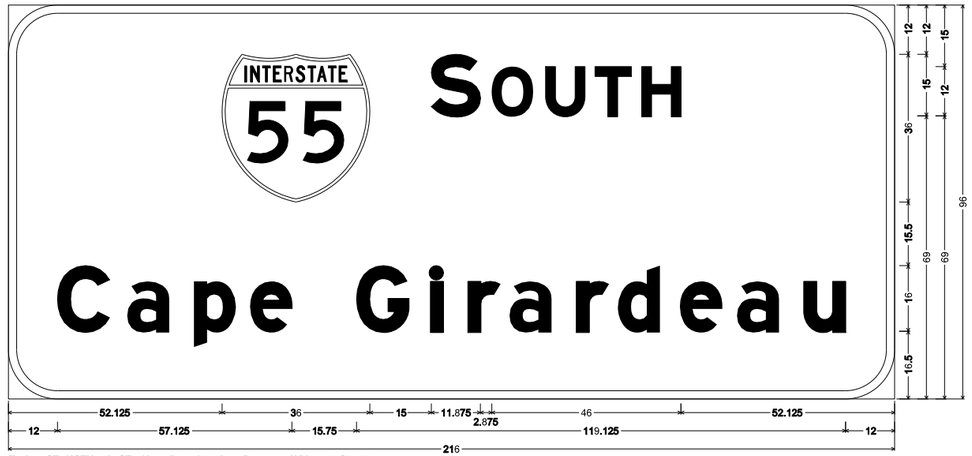

E6-2a STRUCTURAL ST; 12.000" Radius, 2.000" Border, White on Green;
[SOUTH] E Mod; [Cape Girardeau] E Mod;
Table of letter and object lefts.

55 52.125	S 103.125	O 117.875	U 130.875	T 143.000	H 154.375	
C 12.000	a 29.000	p 45.250	e 58.875	G 84.875	l 102.875	r 112.000
a 122.125	r 138.375	d 148.500	e 163.625	a 177.625	u 193.875	

SIGN NO.	15
STATION	941+35
ROADWAY	I-55 SOUTHBOUND

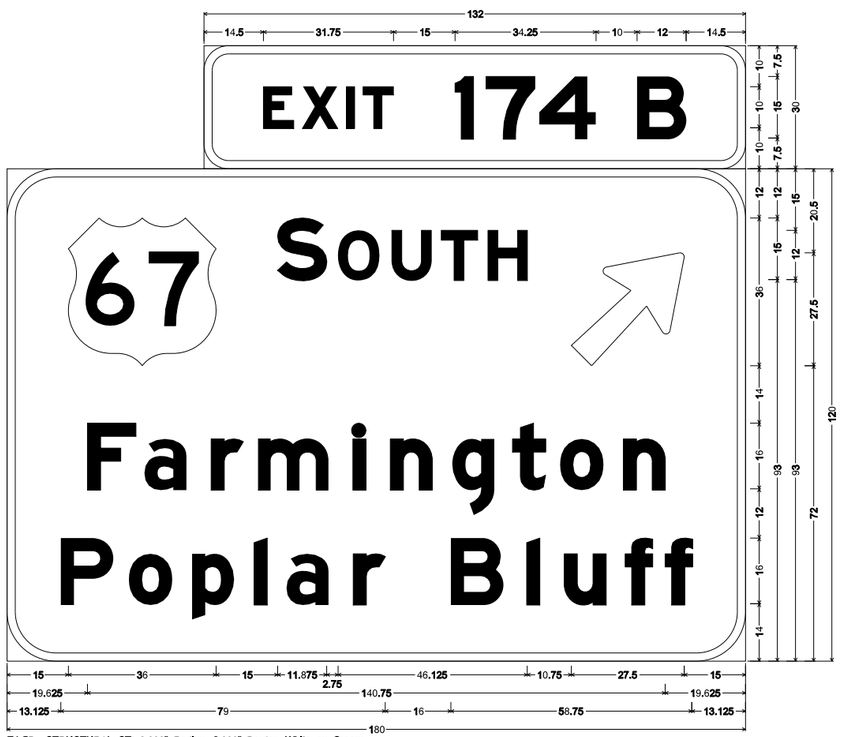

E1-5P STRUCTURAL ST; 6.000" Radius, 2.000" Border, White on Green;
[EXIT 174 B] E Mod;
E1-1 STRUCTURAL ST; 12.000" Radius, 2.000" Border, White on Green;
[SOUTH] E Mod; Arrow 160 - 35.000" 45°; [Farmington] E Mod; [Poplar Bluff] E Mod;
Table of letter and object lefts.

E 14.500	X 24.000	I 34.750	T 38.750	I 61.250	7 68.750	4 81.750	B 105.500	
67 15.000	S 66.000	O 80.625	U 93.750	T 105.875	H 117.250	137.500		
F 19.625	a 33.500	r 49.750	m 61.250	i 84.250	n 93.375	g 108.500	t 123.250	o 134.750	n 150.250
P 13.125	o 29.750	p 45.125	l 60.250	a 68.125	r 84.375	B 108.125	l 126.625	u 135.750	f 150.625	f 160.375

SIGN NO.	15
STATION	941+35
ROADWAY	I-55 SOUTHBOUND

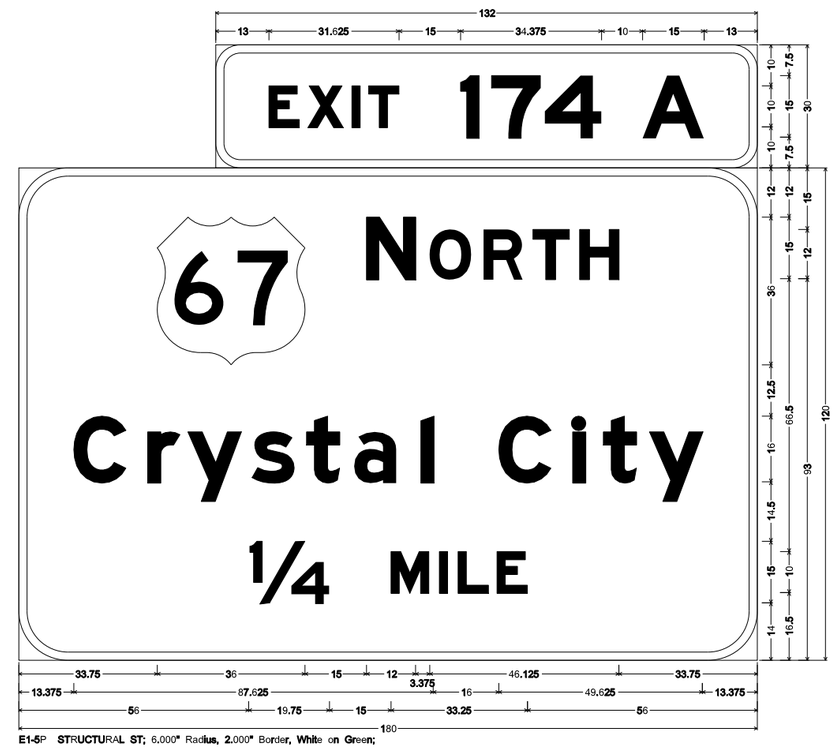

E1-5P STRUCTURAL ST; 6.000" Radius, 2.000" Border, White on Green;
[EXIT 174 A] E Mod;
E1-1 STRUCTURAL ST; 12.000" Radius, 2.000" Border, White on Green;
[NORTH] E Mod; [Crystal City] E Mod; [¼] E Mod; [MILE] E Mod;
Table of letter and object lefts.

E 13.000	X 22.500	I 33.125	T 37.250	I 59.625	7 67.250	4 80.250	A 104.000	
67 33.750	N 84.750	O 100.125	R 113.250	T 125.250	H 136.750			
C 13.375	r 31.375	y 41.250	s 56.875	t 70.125	a 81.750	l 98.000	c 117.000	l 135.000	t 142.500	y 153.750
¼ 56.000	M 90.750	I 102.500	L 107.125	E 116.500						

SIGN NO.	15
STATION	941+35
ROADWAY	I-55 SOUTHBOUND

DISCLAIMER
THE PROFESSIONAL WHOSE SIGNATURE AND PERSONAL SEAL APPEAR HEREON ASSUMES RESPONSIBILITY ONLY FOR WHAT APPEARS ON THIS PAGE, AND DISCLAIMS (PURSUANT TO SECTION 327.411 RSMO) SPECIFICATION, ESTIMATES, REPORTS, OR OTHER DOCUMENTS OR INSTRUMENTS NOT SEALED BY THE UNDERSIGNED PROFESSIONAL RELATING TO OR INTENDED TO BE USED FOR ANY PART OR PARTS OF THE PROJECT TO WHICH THIS PAGE REFERS.

STATE OF MISSOURI
SHIRLEY J. NORRIS
NUMBER PE-28779
PROFESSIONAL ENGINEER
THIS SHEET HAS BEEN SIGNED, SEALED AND DATED ELECTRONICALLY.

IF A SEAL IS PRESENT ON THIS SHEET IT HAS BEEN ELECTRONICALLY SEALED AND DATED.

DATE PREPARED	9/29/2016
ROUTE	I-55
STATE	MO
DISTRICT	SL
SHEET NO.	87
COUNTY	JEFFERSON
JOB NO.	J6I3110
CONTRACT ID.	
PROJECT NO.	
BRIDGE NO.	

DATE	DESCRIPTION

MISSOURI HIGHWAYS AND TRANSPORTATION COMMISSION
105 WEST CAPITOL
JEFFERSON CITY, MO 65102
1-888-ASK-MODOT (1-888-275-6636)

SIGNING SHEETS
SHEET 12 OF 14

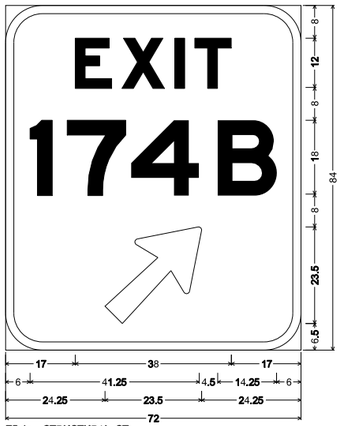

E5-1a STRUCTURAL ST;
9.000" Radius, 2.000" Border, White on Green;
[EXIT] E Mod; [174 B] E Mod; Arrow 133 - 30.000" 45°;
Table of letter and object lefts.

E 17.000	**X** 28.375	**I** 41.250	**T** 46.125
1 6.000	**7** 15.000	**4** 30.625	**B** 51.750
24.250			

SIGN NO.	16
STATION	942+72
ROADWAY	I-55 SOUTHBOUND

DISCLAIMER
THE PROFESSIONAL WHOSE SIGNATURE AND PERSONAL SEAL APPEAR HEREON ASSUMES RESPONSIBILITY ONLY FOR WHAT APPEARS ON THIS PAGE, AND DISCLAIMS (PURSUANT TO SECTION 327.411 RSMO) SPECIFICATION, ESTIMATES, REPORTS, OR OTHER DOCUMENTS OR INSTRUMENTS NOT SEALED BY THE UNDERSIGNED PROFESSIONAL RELATING TO OR INTENDED TO BE USED FOR ANY PART OR PARTS OF THE PROJECT TO WHICH THIS PAGE REFERS.

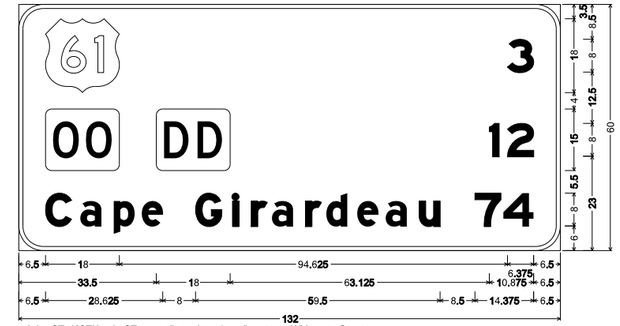

D2-3 **STRUCTURAL ST;** 6.000" Radius, 1.000" Border, White on Green;
[3] E Mod; Rounded Rectangle 1.500" Radius;
Rounded Rectangle 1.500" Radius;
[12] E Mod; [Cape Girardeau] E Mod; [74] E Mod;
Table of letter and object lefts.

48 6.500	**3** 119.125																		
6.500	33.500	**1** 114.625	**2** 119.125																
C 6.500	**a** 15.000	**p** 23.125	**e** 30.000	**G** 43.125	**l** 52.125	**r** 56.625	**a** 61.750	**r** 69.875	**d** 75.000	**e** 82.500	**a** 89.500	**u** 97.625							
	7 111.125	**4** 118.125																	

SIGN NO.	20
STATION	1001+55
ROADWAY	I-55 SOUTHBOUND

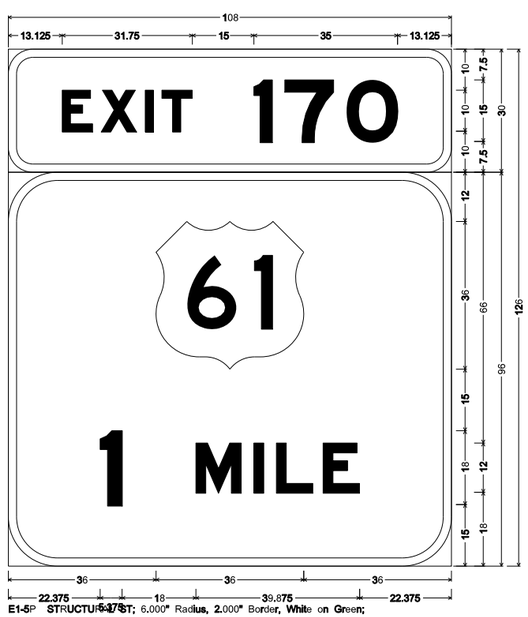

E1-5P STRUCTURAL ST; 6.000" Radius, 2.000" Border, White on Green;
[EXIT] E Mod; [170] E Mod;
E1-1 STRUCTURAL ST; 12.000" Radius, 2.000" Border, White on Green;
[1] E Mod; [MILE] E Mod;
Table of letter and object lefts.

E 13.125	**X** 22.625	**I** 33.375	**T** 37.375	**1** 59.875	**7** 67.375	**O** 82.500
48 36.000						
1 22.375	**M** 45.750	**I** 59.875	**L** 65.375	**E** 76.750		

SIGN NO.	21
STATION	1097+92
ROADWAY	I-55 SOUTHBOUND

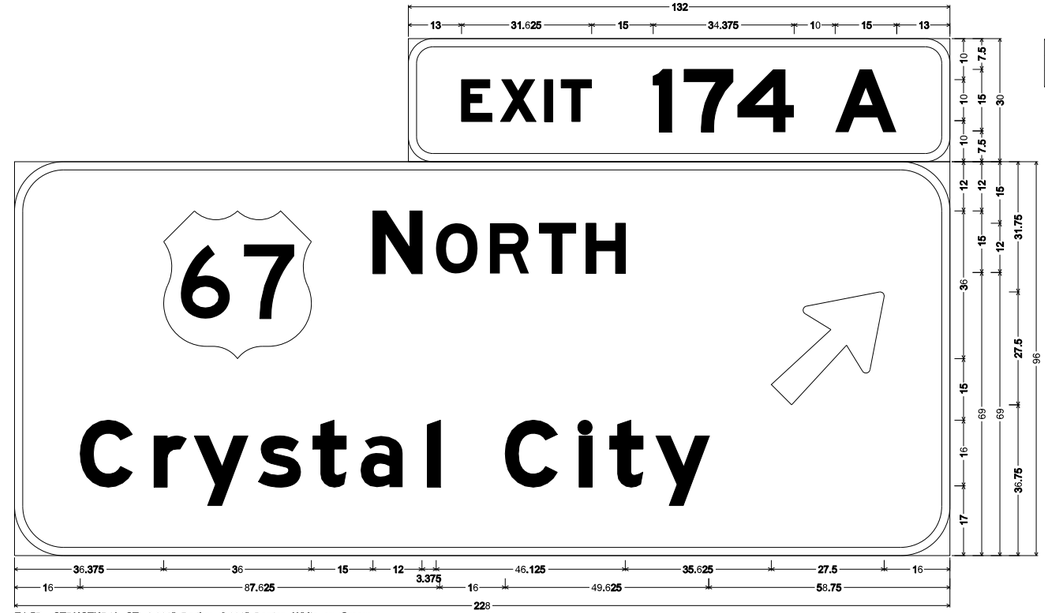

E1-5P STRUCTURAL ST; 6.000" Radius, 2.000" Border, White on Green;
[EXIT 174 A] E Mod;
E1-1 STRUCTURAL ST; 12.000" Radius, 2.000" Border, White on Green;
[NORTH] E Mod; [Crystal City] E Mod; Arrow 160 - 35.000" 45°;
Table of letter and object lefts.

E 13.000	**X** 22.500	**I** 33.125	**T** 37.250	**1** 59.625	**7** 67.250	**4** 80.250	**A** 104.000							
67 36.375	**N** 87.375	**O** 102.750	**R** 115.875	**T** 127.875	**H** 139.250	184.500								
C 16.000	**r** 34.000	**y** 43.875	**s** 59.500	**t** 72.750	**a** 84.375	**l** 100.625	**C** 119.625	**l** 137.625	**t** 145.125	**y** 156.375				

SIGN NO.	18
STATION	958+59
ROADWAY	I-55 SOUTHBOUND

STATE OF MISSOURI
SHIRLEY J. NORRIS
NUMBER PE-28779
PROFESSIONAL ENGINEER

THIS SHEET HAS BEEN SIGNED, SEALED AND DATED ELECTRONICALLY.

DATE PREPARED	
9/29/2016	
ROUTE I-55	STATE MO
DISTRICT SL	SHEET NO. 88
COUNTY JEFFERSON	
JOB NO. J6I3110	
CONTRACT ID.	
PROJECT NO.	
BRIDGE NO.	

DATE	DESCRIPTION

IF A SEAL IS PRESENT ON THIS SHEET IT HAS BEEN ELECTRONICALLY SEALED AND DATED.

MISSOURI HIGHWAYS AND TRANSPORTATION COMMISSION
105 WEST CAPITOL
JEFFERSON CITY, MO 65102
1-888-ASK-MODOT (1-888-275-6636)

SIGNING SHEETS
SHEET 13 OF 14

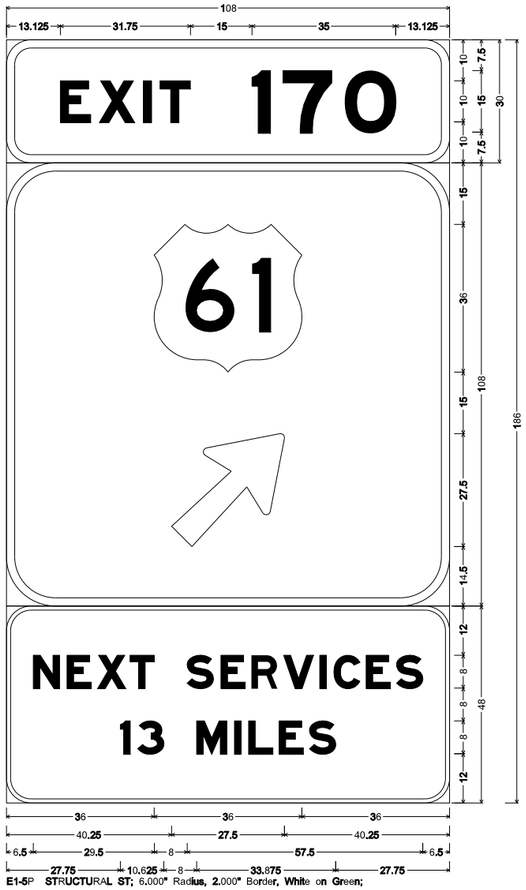

SIGN NO.	22
STATION	1124+94
ROADWAY	I-55 SOUTHBOUND

E1-5P STRUCTURAL ST; 6.000" Radius, 2.000" Border, White on Green;
[EXIT] E Mod; **[170] E** Mod;
E1-1 STRUCTURAL ST; 12.000" Radius, 2.000" Border, White on Green;
Arrow 160 - 35.000" 45°;
6.000" Radius, 1.000" Border, White on Blue;
[NEXT SERVICES] E Mod 90% spacing; **[13 MILES] E** Mod 90% spacing;
Table of letter and object lefts.

E 13.125	X 22.625	I 33.375	T 37.375	1 59.875	7 67.375	0 82.500	
36.000							
40.250							
N 6.500	E 14.750	X 22.125	T 30.125				
	S 44.000	E 52.250	R 59.750	V 67.500	I 76.375	C 79.750	E 87.625	S 95.125
1 27.750	3 32.000	M 46.375	I 55.625	L 59.000	E 66.500	S 73.875	

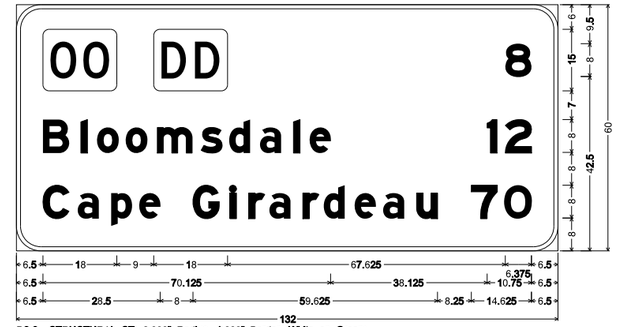

SIGN NO.	28
STATION	1193+72
ROADWAY	I-55 SOUTHBOUND

D2-3 STRUCTURAL ST; 6.000" Radius, 1.000" Border, White on Green;
Rounded Rectangle 1.500" Radius;
Rounded Rectangle 1.500" Radius;
[8] E Mod; **[Bloomsdale] E** Mod; **[12] E** Mod; **[Cape Girardeau] E** Mod; **[70] E** Mod;
Table of letter and object lefts.

6.500	33.500	8 119.125											
B 6.500	l 15.750	o 19.625	o 26.625	m 34.375	s 45.000	d 51.875	a 59.375	l 67.500	c 71.500	l 114.750	2 119.125		
C 6.500	a 15.000	p 23.125	e 29.875	G 43.000	l 52.000	r 56.625	a 61.625	r 69.750	d 74.875	e 82.500	a 89.375	u 97.500	
	7 110.875	0 118.875											

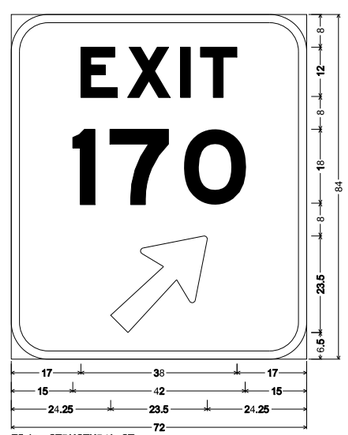

SIGN NO.	24
STATION	1135+32
ROADWAY	I-55 SOUTHBOUND

E5-1a STRUCTURAL ST;
9.000" Radius, 2.000" Border, White on Green;
[EXIT] E Mod; **[170] E** Mod; Arrow 133 - 30.000" 45°;
Table of letter and object lefts.

E 17.000	X 28.375	I 41.250	T 46.125
1 15.000	7 24.000	0 42.125	
24.250			

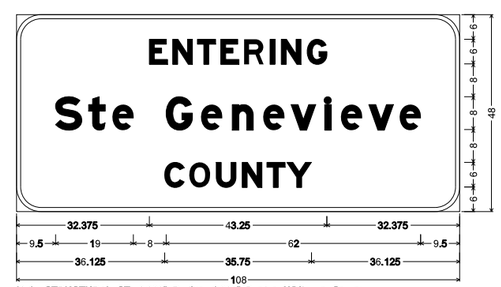

SIGN NO.	29
STATION	1458+26
ROADWAY	I-55 SOUTHBOUND

I6-1 STRUCTURAL ST; 6.000" Radius, 1.000" Border, White on Green;
[ENTERING] E Mod; **[Ste Genevieve] E** Mod; **[COUNTY] E** Mod;
Table of letter and object lefts.

E 32.375	N 38.125	T 44.125	E 49.750	R 55.500	I 61.750	N 64.500	G 70.875
S 9.500	t 17.625	e 23.375					
	G 36.500	e 45.000	n 52.625	e 60.125	v 66.875	I 75.125	e 79.125	v 85.875	e 93.375
C 36.125	O 42.125	U 48.625	N 55.000	T 61.000	Y 65.875		

DISCLAIMER
THE PROFESSIONAL WHOSE SIGNATURE AND PERSONAL SEAL APPEAR HEREON ASSUMES RESPONSIBILITY ONLY FOR WHAT APPEARS ON THIS PAGE, AND DISCLAIMS (PURSUANT TO SECTION 327.411 RSMO) SPECIFICATION, ESTIMATES, REPORTS, OR OTHER DOCUMENTS OR INSTRUMENTS NOT SEALED BY THE UNDERSIGNED PROFESSIONAL RELATING TO OR INTENDED TO BE USED FOR ANY PART OR PARTS OF THE PROJECT TO WHICH THIS PAGE REFERS.

STATE OF MISSOURI
SHIRLEY J. NORRIS
NUMBER PE-28779
PROFESSIONAL ENGINEER
THIS SHEET HAS BEEN SIGNED, SEALED AND DATED ELECTRONICALLY.

DATE PREPARED	9/29/2016
ROUTE I-55	STATE MO
DISTRICT SL	SHEET NO. 89
COUNTY	JEFFERSON
JOB NO.	J6I3110
CONTRACT ID.	
PROJECT NO.	
BRIDGE NO.	

DATE	DESCRIPTION

IF A SEAL IS PRESENT ON THIS SHEET IT HAS BEEN ELECTRONICALLY SEALED AND DATED.

MISSOURI HIGHWAYS AND TRANSPORTATION COMMISSION
105 WEST CAPITOL
JEFFERSON CITY, MO 65102
1-888-ASK-MODOT (1-888-275-6636)

SIGNING SHEETS
SHEET 14 OF 14

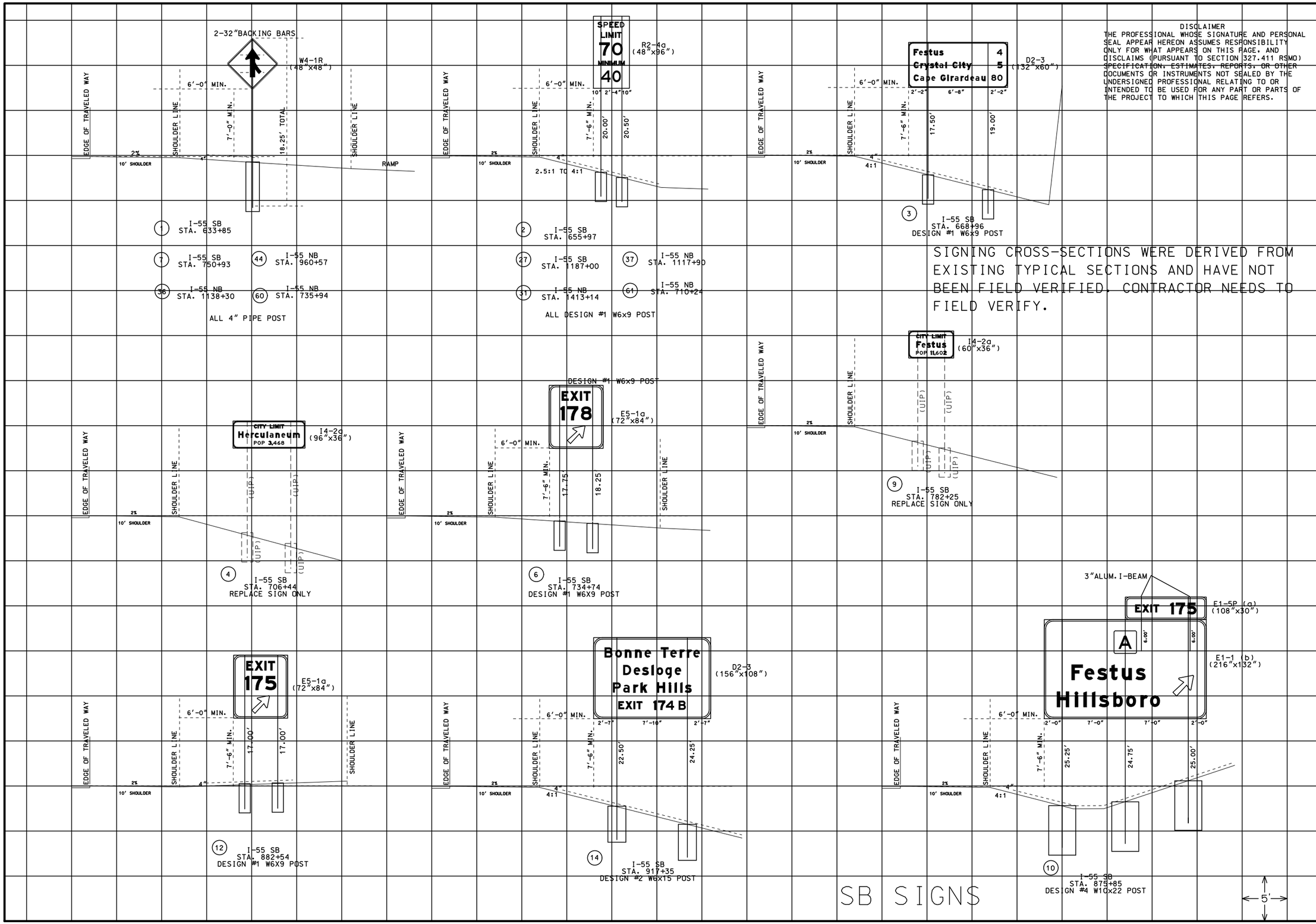

DISCLAIMER
THE PROFESSIONAL WHOSE SIGNATURE AND PERSONAL SEAL APPEAR HEREON ASSUMES RESPONSIBILITY ONLY FOR WHAT APPEARS ON THIS PAGE, AND DISCLAIMS (PURSUANT TO SECTION 327.411 RSMO) SPECIFICATION, ESTIMATES, REPORTS, OR OTHER DOCUMENTS OR INSTRUMENTS NOT SEALED BY THE UNDERSIGNED PROFESSIONAL RELATING TO OR INTENDED TO BE USED FOR ANY PART OR PARTS OF THE PROJECT TO WHICH THIS PAGE REFERS.

STATE OF MISSOURI
SHIRLEY J. NORRIS
NUMBER PE-28779
PROFESSIONAL ENGINEER

THIS SHEET HAS BEEN SIGNED, SEALED AND DATED ELECTRONICALLY.

DATE PREPARED	9/29/2016
ROUTE	I-55
STATE	MO
DISTRICT	SL
SHEET NO.	90
COUNTY	JEFFERSON
JOB NO.	J6I3110
CONTRACT ID.	
PROJECT NO.	
BRIDGE NO.	

DESCRIPTION

DATE

IF A SEAL IS PRESENT ON THIS SHEET IT HAS BEEN ELECTRONICALLY SEALED AND DATED.

MISSOURI HIGHWAYS AND TRANSPORTATION COMMISSION
105 WEST CAPITOL
JEFFERSON CITY, MO 65102
1-888-ASK-MODOT (1-888-275-6636)

SIGNING CROSS-SECTION SHEET 1 OF 6

SIGNING CROSS-SECTIONS WERE DERIVED FROM EXISTING TYPICAL SECTIONS AND HAVE NOT BEEN FIELD VERIFIED. CONTRACTOR NEEDS TO FIELD VERIFY.

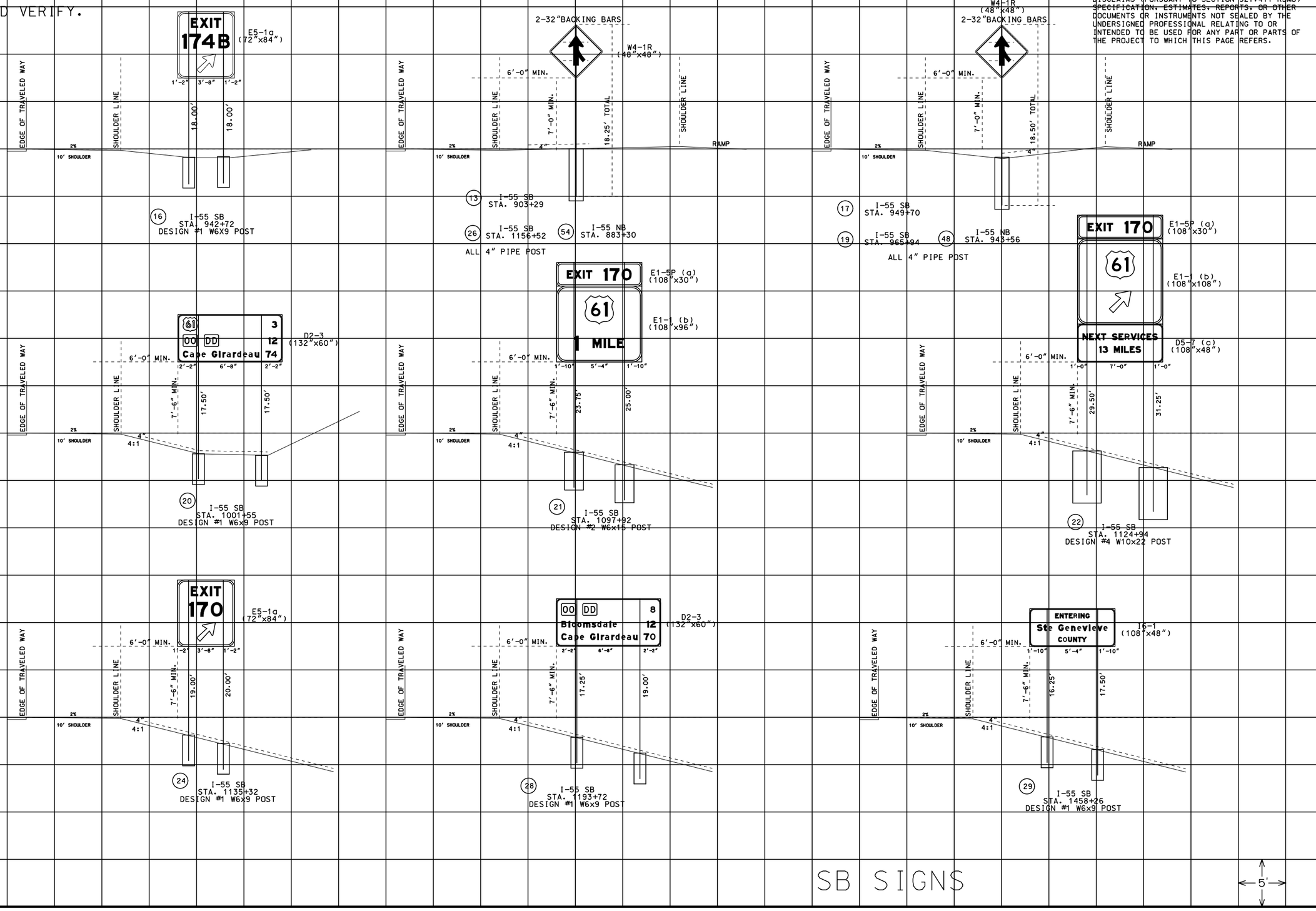

DISCLAIMER
THE PROFESSIONAL WHOSE SIGNATURE AND PERSONAL SEAL APPEAR HEREON ASSUMES RESPONSIBILITY ONLY FOR WHAT APPEARS ON THIS PAGE, AND DISCLAIMS (PURSUANT TO SECTION 327.411 RSMO) SPECIFICATION, ESTIMATES, REPORTS, OR OTHER DOCUMENTS OR INSTRUMENTS NOT SEALED BY THE UNDERSIGNED PROFESSIONAL RELATING TO OR INTENDED TO BE USED FOR ANY PART OR PARTS OF THE PROJECT TO WHICH THIS PAGE REFERS.

STATE OF MISSOURI
SHIRLEY J. NORRIS
NUMBER PE-28779
PROFESSIONAL ENGINEER

THIS SHEET HAS BEEN SIGNED, SEALED AND DATED ELECTRONICALLY.

DATE PREPARED	9/29/2016
ROUTE	I-55
STATE	MO
DISTRICT	SL
SHEET NO.	91
COUNTY	JEFFERSON
JOB NO.	J6I3110
CONTRACT ID.	
PROJECT NO.	
BRIDGE NO.	

DESCRIPTION

DATE

IF A SEAL IS PRESENT ON THIS SHEET IT HAS BEEN ELECTRONICALLY SEALED AND DATED.

MISSOURI HIGHWAYS AND TRANSPORTATION COMMISSION
105 WEST CAPITOL
JEFFERSON CITY, MO 65102
1-888-ASK-MODOT (1-888-275-6636)

SIGNING CROSS-SECTION SHEET 2 OF 6

SIGNING CROSS-SECTIONS WERE DERIVED FROM EXISTING TYPICAL SECTIONS AND HAVE NOT BEEN FIELD VERIFIED. CONTRACTOR NEEDS TO FIELD VERIFY.

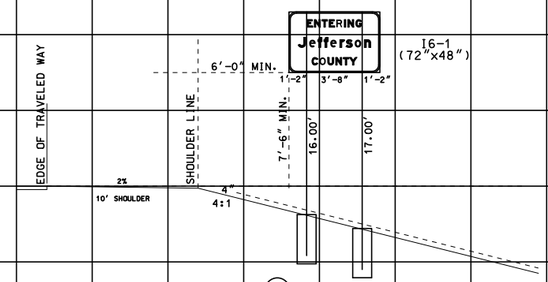

30 I-55 NB
STA. 1461+55
DESIGN #1 W6x9 POST

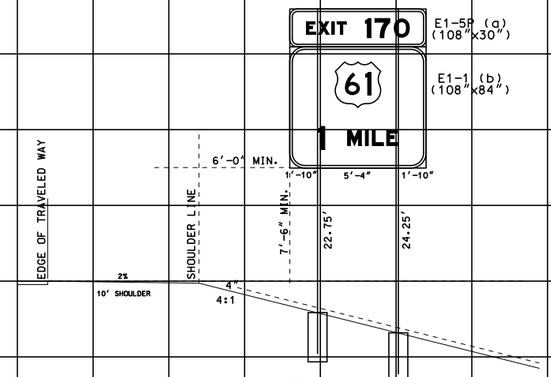

32 I-55 NB
STA. 1194+90
DESIGN #1 W6X9 POST

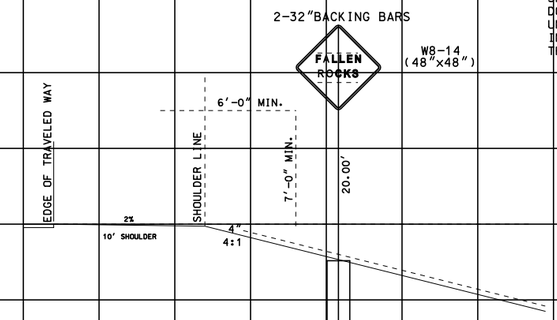

33 I-55 NB
STA. 1175+93
4" PIPE POST

DISCLAIMER
THE PROFESSIONAL WHOSE SIGNATURE AND PERSONAL SEAL APPEAR HEREON ASSUMES RESPONSIBILITY ONLY FOR WHAT APPEARS ON THIS PAGE, AND DISCLAIMS (PURSUANT TO SECTION 327.411 RSMO) SPECIFICATION, ESTIMATES, REPORTS, OR OTHER DOCUMENTS OR INSTRUMENTS NOT SEALED BY THE UNDERSIGNED PROFESSIONAL RELATING TO OR INTENDED TO BE USED FOR ANY PART OR PARTS OF THE PROJECT TO WHICH THIS PAGE REFERS.

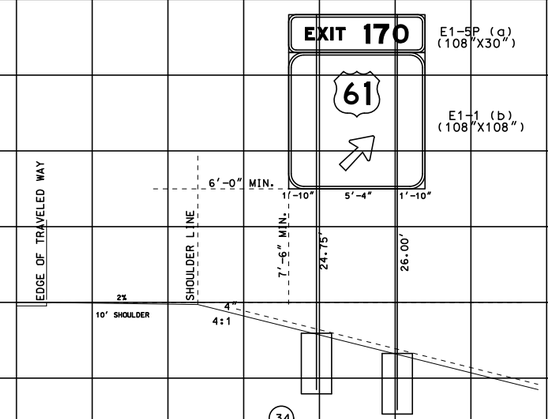

34 I-55 NB
STA. 1161+92
DESIGN #2 W6x15 POST

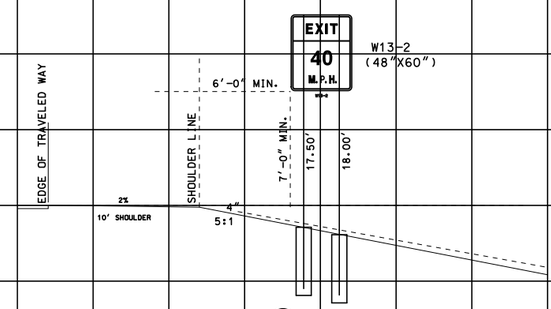

35 I-55 NB
STA. 1153+00
2 - 2.5" PIPE POSTS

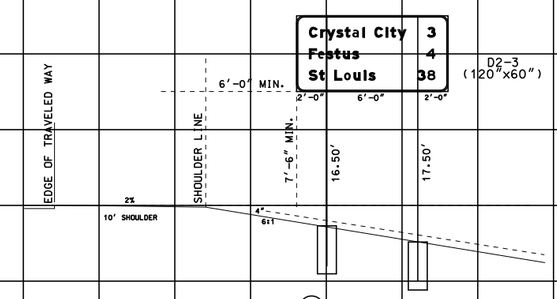

38 I-55 NB
STA. 1102+87
DESIGN #1 W6x9 POST

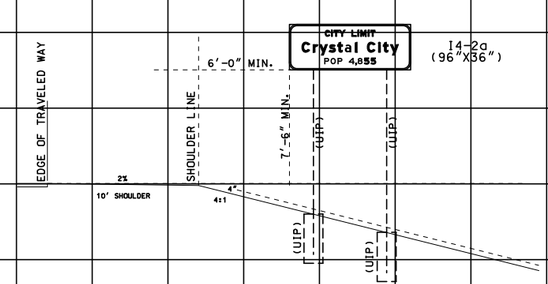

39 I-55 NB
STA. 1038+08
REPLACE SIGN ONLY

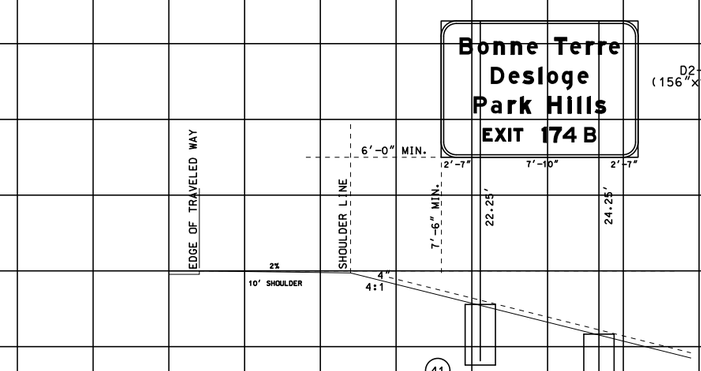

41 I-55 NB
STA. 982+48
DESIGN #2 W6x15 POST

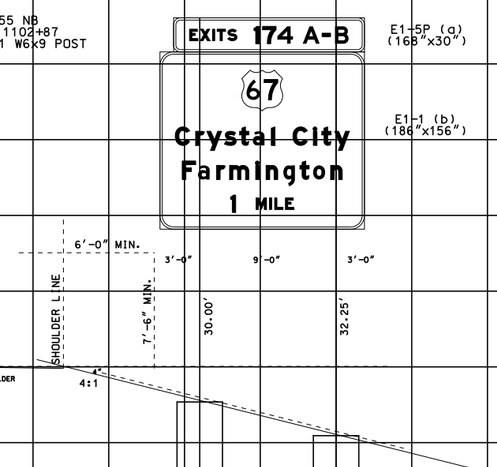

40 I-55 NB
STA. 1022+90
DESIGN #5 W10x26 POST

5'

NB SIGNS

STATE OF MISSOURI
SHIRLEY J. NORRIS
NUMBER PE-28779
PROFESSIONAL ENGINEER
THIS SHEET HAS BEEN SIGNED, SEALED AND DATED ELECTRONICALLY.

DATE PREPARED	
9/29/2016	
ROUTE	STATE
I-55	MO
DISTRICT	SHEET NO.
SL	92
COUNTY	
JEFFERSON	
JOB NO.	
J6I3110	
CONTRACT ID.	
PROJECT NO.	
BRIDGE NO.	

DATE	DESCRIPTION

IF A SEAL IS PRESENT ON THIS SHEET IT HAS BEEN ELECTRONICALLY SEALED AND DATED.

MISSOURI HIGHWAYS AND TRANSPORTATION COMMISSION
105 WEST CAPITOL
JEFFERSON CITY, MO 65102
1-888-ASK-MODOT (1-888-275-6636)

SIGNING
CROSS-SECTION
SHEET 3 OF 6

SIGNING CROSS-SECTIONS WERE DERIVED FROM EXISTING TYPICAL SECTIONS AND HAVE NOT BEEN FIELD VERIFIED. CONTRACTOR NEEDS TO FIELD VERIFY.

DISCLAIMER
THE PROFESSIONAL WHOSE SIGNATURE AND PERSONAL SEAL APPEAR HEREON ASSUMES RESPONSIBILITY ONLY FOR WHAT APPEARS ON THIS PAGE, AND DISCLAIMS (PURSUANT TO SECTION 327.411 RSMO) SPECIFICATION, ESTIMATES, REPORTS, OR OTHER DOCUMENTS OR INSTRUMENTS NOT SEALED BY THE UNDERSIGNED PROFESSIONAL RELATING TO OR INTENDED TO BE USED FOR ANY PART OR PARTS OF THE PROJECT TO WHICH THIS PAGE REFERS.

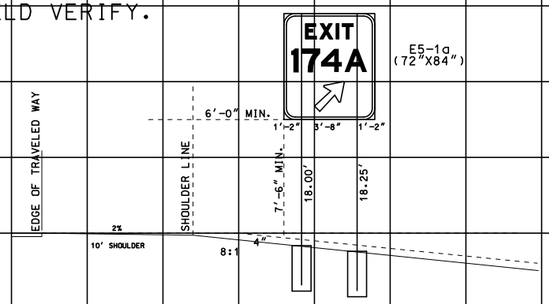

43 I-55 NB
STA. 968+92
DESIGN #1 W6x9 POST

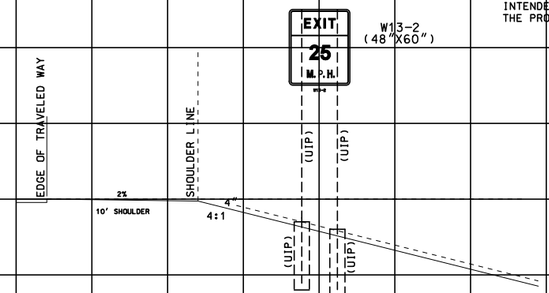

45 I-55 NB
STA. 951+50
REPLACE SIGN ONLY

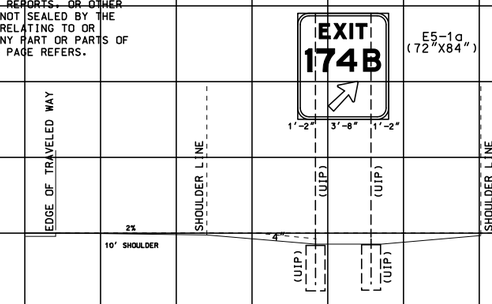

47 I-55 NB
STA. 950+04
REPLACE SIGN ONLY

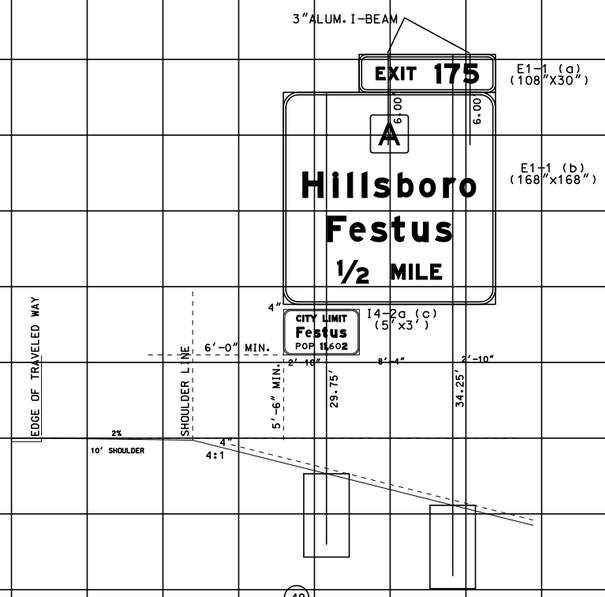

49 I-55 NB
STA. 929+16
DESIGN #6 W12x26 POST

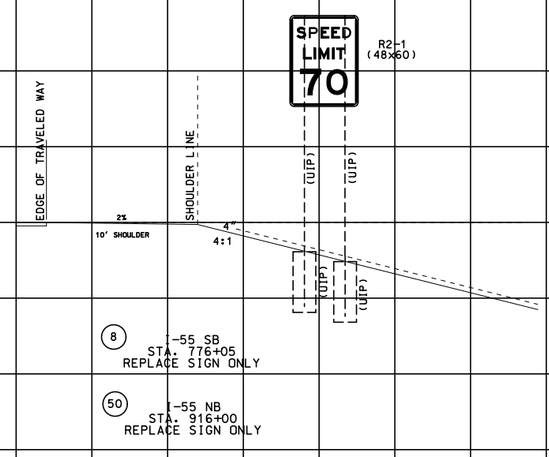

8 I-55 SB
STA. 776+05
REPLACE SIGN ONLY

50 I-55 NB
STA. 916+00
REPLACE SIGN ONLY

55 I-55 NB
STA. 855+83
REPLACE SIGN ONLY

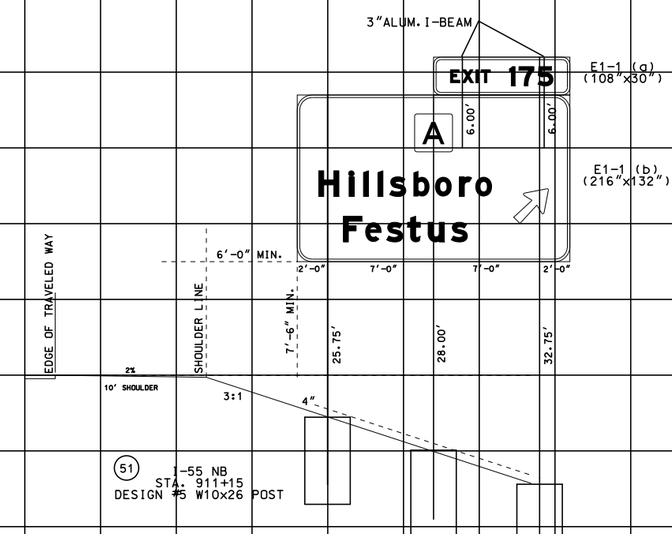

51 I-55 NB
STA. 911+15
DESIGN #5 W10x26 POST

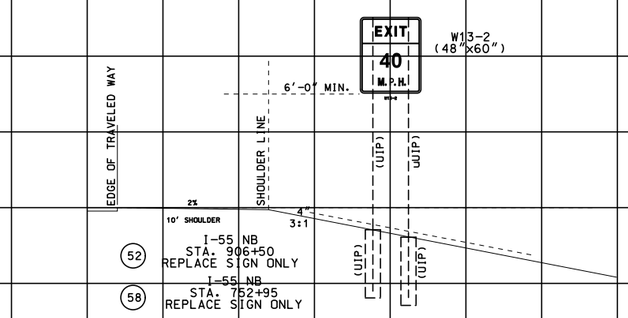

52 I-55 NB
STA. 906+50
REPLACE SIGN ONLY

58 I-55 NB
STA. 752+95
REPLACE SIGN ONLY

66 I-55 NB
STA. 636+00
REPLACE SIGN ONLY

53 I-55 NB
STA. 904+31
REPLACE SIGN ONLY

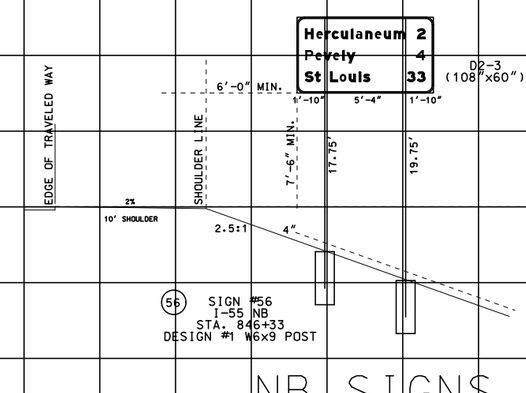

56 SIGN #56
I-55 NB
STA. 846+33
DESIGN #1 W6x9 POST

NB SIGNS

5'

STATE OF MISSOURI
SHIRLEY J. NORRIS
NUMBER PE-28779
PROFESSIONAL ENGINEER
THIS SHEET HAS BEEN SIGNED, SEALED AND DATED ELECTRONICALLY.

DATE PREPARED	
9/29/2016	
ROUTE	STATE
I-55	MO
DISTRICT	SHEET NO.
SL	93
COUNTY	
JEFFERSON	
JOB NO.	
J6I3110	
CONTRACT ID.	
PROJECT NO.	
BRIDGE NO.	

DATE	DESCRIPTION

MISSOURI HIGHWAYS AND TRANSPORTATION COMMISSION
105 WEST CAPITOL
JEFFERSON CITY, MO 65102
1-888-ASK-MODOT (1-888-275-6636)

IF A SEAL IS PRESENT ON THIS SHEET IT HAS BEEN ELECTRONICALLY SEALED AND DATED.

SIGNING CROSS-SECTION
SHEET 4 OF 6

SIGNING CROSS-SECTIONS WERE DERIVED FROM EXISTING TYPICAL SECTIONS AND HAVE NOT BEEN FIELD VERIFIED. CONTRACTOR NEEDS TO FIELD VERIFY.

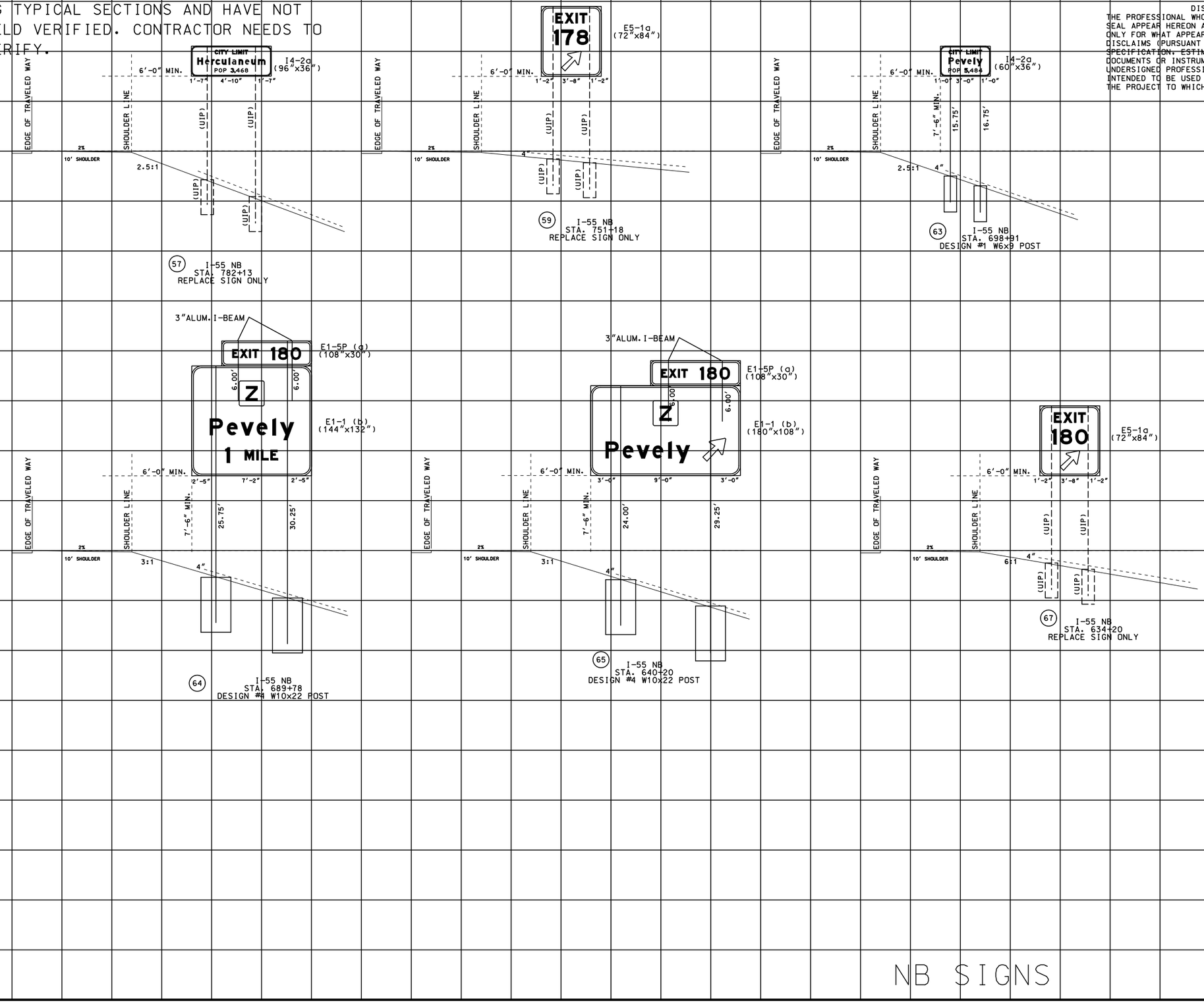

NB SIGNS

DISCLAIMER
THE PROFESSIONAL WHOSE SIGNATURE AND PERSONAL SEAL APPEAR HEREON ASSUMES RESPONSIBILITY ONLY FOR WHAT APPEARS ON THIS PAGE, AND DISCLAIMS (PURSUANT TO SECTION 327.411 RSMO) SPECIFICATION, ESTIMATES, REPORTS, OR OTHER DOCUMENTS OR INSTRUMENTS NOT SEALED BY THE UNDERSIGNED PROFESSIONAL RELATING TO OR INTENDED TO BE USED FOR ANY PART OR PARTS OF THE PROJECT TO WHICH THIS PAGE REFERS.

STATE OF MISSOURI
SHIRLEY J. NORRIS
NUMBER PE-28779
PROFESSIONAL ENGINEER

THIS SHEET HAS BEEN SIGNED, SEALED AND DATED ELECTRONICALLY.

DATE PREPARED	9/29/2016
ROUTE	I-55
STATE	MO
DISTRICT	SL
SHEET NO.	94
COUNTY	JEFFERSON
JOB NO.	J6I3110
CONTRACT ID.	
PROJECT NO.	
BRIDGE NO.	

DESCRIPTION

DATE

IF A SEAL IS PRESENT ON THIS SHEET IT HAS BEEN ELECTRONICALLY SEALED AND DATED.

MISSOURI HIGHWAYS AND TRANSPORTATION COMMISSION
105 WEST CAPITOL
JEFFERSON CITY, MO 65102
1-888-ASK-MODOT (1-888-275-6636)

SIGNING
CROSS-SECTION
SHEET 5 OF 6

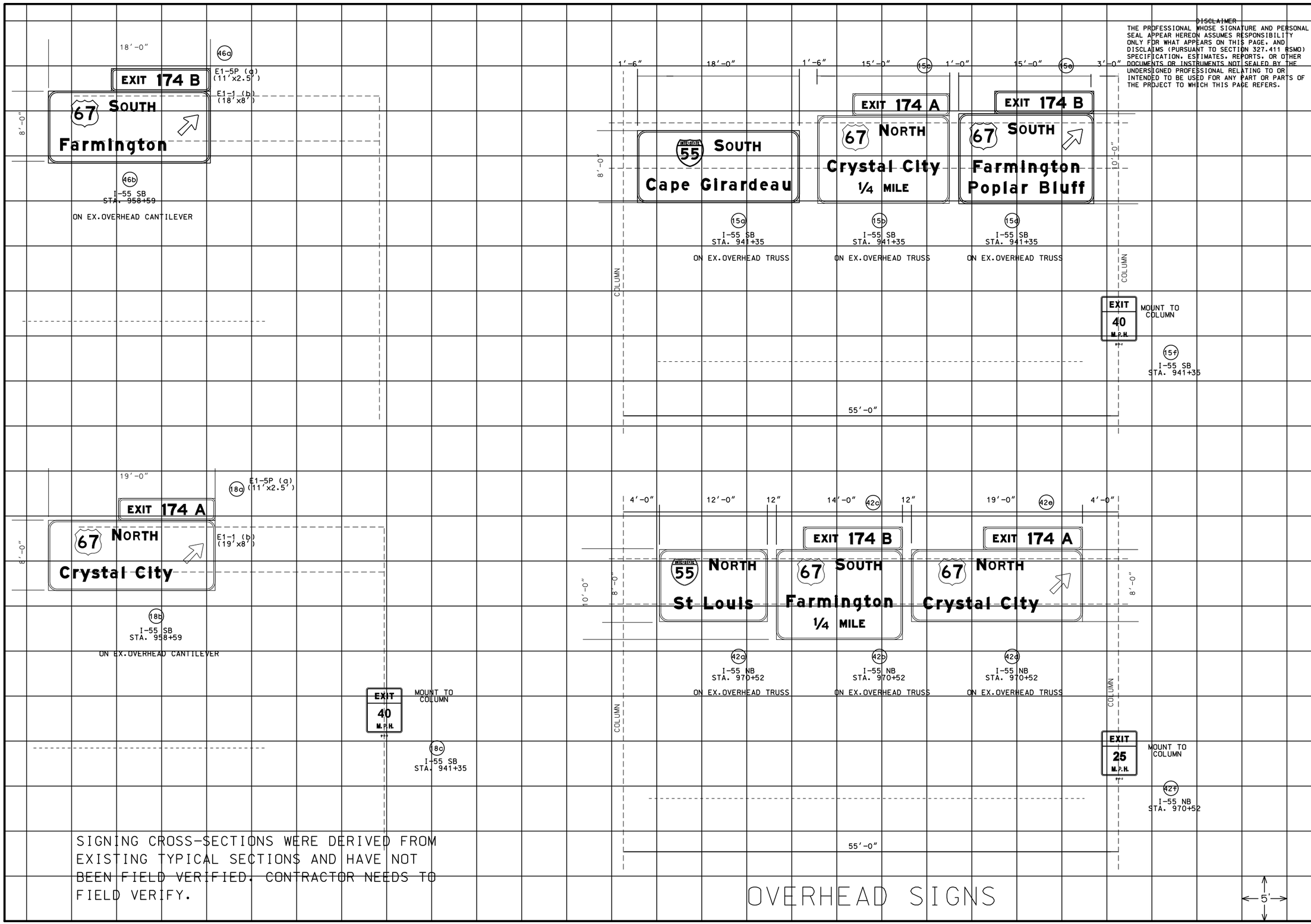

SIGNING CROSS-SECTIONS WERE DERIVED FROM EXISTING TYPICAL SECTIONS AND HAVE NOT BEEN FIELD VERIFIED. CONTRACTOR NEEDS TO FIELD VERIFY.

OVERHEAD SIGNS

DISCLAIMER

THE PROFESSIONAL WHOSE SIGNATURE AND PERSONAL SEAL APPEAR HEREON ASSUMES RESPONSIBILITY ONLY FOR WHAT APPEARS ON THIS PAGE, AND DISCLAIMS (PURSUANT TO SECTION 327.411 RSMO) SPECIFICATION, ESTIMATES, REPORTS, OR OTHER DOCUMENTS OR INSTRUMENTS NOT SEALED BY THE UNDERSIGNED PROFESSIONAL RELATING TO OR INTENDED TO BE USED FOR ANY PART OR PARTS OF THE PROJECT TO WHICH THIS PAGE REFERS.

STATE OF MISSOURI
SHIRLEY J. NORRIS
NUMBER PE-28779
PROFESSIONAL ENGINEER

THIS SHEET HAS BEEN SIGNED, SEALED AND DATED ELECTRONICALLY.

DATE PREPARED	9/29/2016
ROUTE	I-55
STATE	MO
DISTRICT	SL
SHEET NO.	95
COUNTY	JEFFERSON
JOB NO.	J6I3110
CONTRACT ID.	
PROJECT NO.	
BRIDGE NO.	

DESCRIPTION

DATE

IF A SEAL IS PRESENT ON THIS SHEET IT HAS BEEN ELECTRONICALLY SEALED AND DATED.

MISSOURI HIGHWAYS AND TRANSPORTATION COMMISSION

105 WEST CAPITOL
JEFFERSON CITY, MO 65102
1-888-ASK-MODOT (1-888-275-6636)

SIGNING
CROSS-SECTION
SHEET 6 OF 6

MISSOURI HIGHWAYS AND TRANSPORTATION COMMISSION

PLANS FOR PROPOSED STATE HIGHWAY

JEFFERSON COUNTY

DESIGN DESIGNATION

A.A.D.T. - 2016 = 53,147
A.A.D.T. - 2036 = 59,311
T = 18%
V = 70 M.P.H.
FUNCTIONAL CLASSIFICATION- INTERSTATE

NO NEW RIGHT OF WAY WILL BE ACQUIRED

CONVENTIONAL SYMBOLS
(USED IN PLANS)

	EXISTING	NEW
BUILDINGS AND STRUCTURES		
GUARD RAIL		
CONCRETE RIGHT-OF-WAY MARKER		
STEEL RIGHT-OF-WAY MARKER		
LOCATION SURVEY MARKER		
UTILITIES		
FIBER OPTICS	FO	FO
OVERHEAD TELEPHONE	O	O
UNDERGROUND TELEPHONE	T	T
OVERHEAD POWER		
UNDERGROUND POWER	P	P
GAS	G	G
WATER	W	W
MANHOLE	SAN	
FIRE HYDRANT	HYD	
WATER VALVE	WV	
WATER METER	WM	
DROP INLET	DI	
DITCH BLOCK		
GROUND MOUNTED SIGN	SIGN	
LIGHT POLE		
H-FRAME POWER POLE		
TELEPHONE PEDESTAL	PED	
FENCE		
CHAIN LINK	V	
WOVEN WIRE	X	
GATE POST		
BENCHMARK	BM	

NOTE: DASHED OR OPEN SYMBOLS INDICATE EXISTING FEATURES

DISCLAIMER
THE PROFESSIONAL WHOSE SIGNATURE AND PERSONAL SEAL APPEAR HEREON ASSUMES RESPONSIBILITY ONLY FOR WHAT APPEARS ON THIS PAGE, AND DISCLAIMS (PURSUANT TO SECTION 327.411 RSMO) SPECIFICATION, ESTIMATES, REPORTS, OR OTHER DOCUMENTS OR INSTRUMENTS NOT SEALED BY THE UNDERSIGNED PROFESSIONAL RELATING TO OR INTENDED TO BE USED FOR ANY PART OR PARTS OF THE PROJECT TO WHICH THIS PAGE REFERS.

BEGIN PROJECT STA. 605+77.0

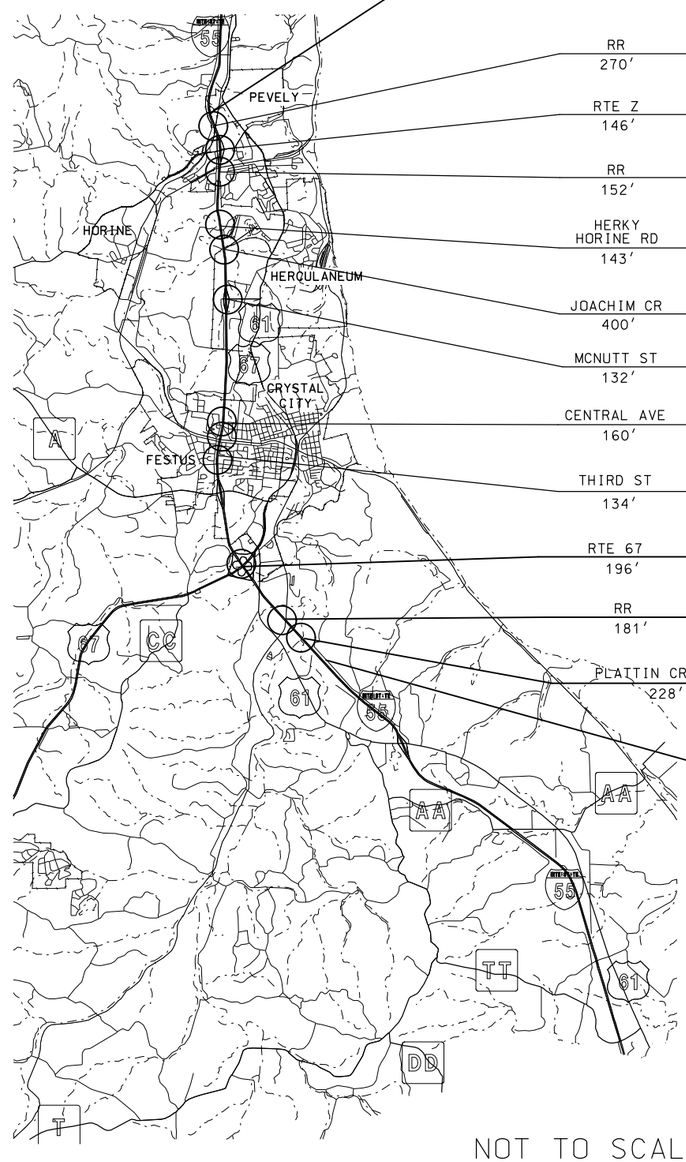

RR	270′	BRIDGE REHABILITATION #A1035 SB 55
RTE Z	146′	BRIDGE REHABILIATION #A0951 TWINS
RR	152′	BRIDGE REHABILITATION #A0953 TWINS
HERKY HORINE RD	143′	BRIDGE REHABILITATION #A0944 TWINS
JOACHIM CR	400′	BRIDGE REHABILITATION #A0945 TWINS
MCNUTT ST	132′	BRIDGE REHABILITATION #A0946 TWINS
CENTRAL AVE	160′	BRIDGE REHABILITATION #A0797 TWINS
THIRD ST	134′	BRIDGE REHABILITATION #A0830 TWINS
RTE 67	196′	BRIDGE REHABILITATION #A0799 TWINS
RR	181′	BRIDGE REHABILITATION #A2221 TWINS
PLATTIN CR	228′	BRIDGE REHABILITATION #A2222 TWINS

BRIDGE REHABILITATIONS
I-55 NORTHBOUND & SOUTHBOUND LANES
(8.105 MILES)

END PROJECT STA. 1030+90.0

NOT TO SCALE

DISCLAIMER
THE EXISTENCE AND APPROXIMATE LOCATION OF UTILITY FACILITIES KNOWN TO EXIST, AS SHOWN ON THE PLANS, ARE BASED ON THE BEST INFORMATION AVAILABLE TO THE COMMISSION AT THIS TIME. THIS INFORMATION IS PROVIDED BY THE COMMISSION "AS-IS" AND THE COMMISSION EXPRESSLY DISCLAIMS ANY REPRESENTATION OR WARRANTY AS TO THE COMPLETENESS, ACCURACY, OR SUITABILITY OF THE INFORMATION FOR ANY USE. RELIANCE UPON THIS INFORMATION IS DONE AT THE RISK AND PERIL OF THE USER, AND THE COMMISSION SHALL NOT BE LIABLE FOR ANY DAMAGES THAT MAY ARISE FROM ANY ERROR IN THE INFORMATION.

INDEX OF SHEETS

DESCRIPTION	SHEET NUMBER
TITLE SHEET	1
TYPICAL SECTIONS (TS) (4 SHEET)	2
QUANTITIES (QU) (4 SHEETS)	3
PLAN-PROFILE (PP)	4A-4B
SPECIAL SHEET (SS)	5
TRAFFIC CONTROL SHEETS (TC)	6-84

LENGTH OF PROJECT

BEGINNING OF PROJECT	STA. 605+77.0
END OF PROJECT	STA. 1030+90.0
APPARENT LENGTH	42513.00 FEET

EQUATIONS

Back	Ahead	
841+83.60	= 839+04.00	+279.60
	TOTAL	+279.60

NET LENGTH OF PROJECT	42792.60 FEET
STATE LENGTH	8.105 MILES

STATE OF MISSOURI
SHIRLEY J. NORRIS
NUMBER PE-28779
PROFESSIONAL ENGINEER
THIS SHEET HAS BEEN SIGNED, SEALED AND DATED ELECTRONICALLY.

DATE PREPARED 10/3/2016

ROUTE	STATE
I-55	MO
DISTRICT	SHEET NO.
SL	1

COUNTY JEFFERSON
JOB NO. J6I3131
CONTRACT ID.
PROJECT NO.
BRIDGE NO.

DESCRIPTION	DATE

IF A SEAL IS PRESENT ON THIS SHEET IT HAS BEEN ELECTRONICALLY SEALED AND DATED.

MISSOURI HIGHWAYS AND TRANSPORTATION COMMISSION
105 WEST CAPITOL
JEFFERSON CITY, MO 65102
1-888-ASK-MODOT (1-888-275-6636)

TITLE SHEET

REV.

OVERLAY ON BRIDGES

(SEE COMBINATION PROJECT J6I3110 DEPTH TRANSITION DETAILS)

APPLICATION RATES	
BP-1 (64-22)	1.910 TONS/CY
TACK COAT	0.10 GAL/SY

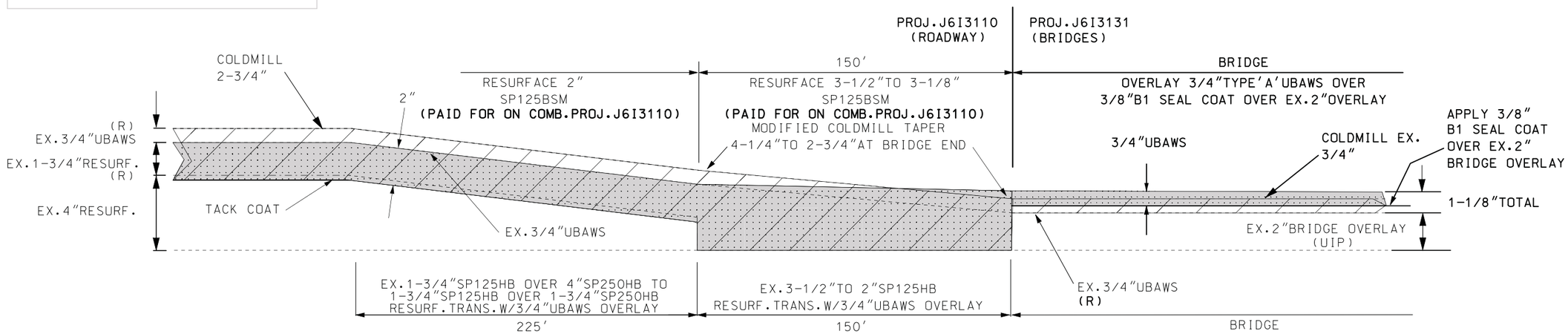

TYPICAL BRIDGE REHABILITATION

DISCLAIMER
THE PROFESSIONAL WHOSE SIGNATURE AND PERSONAL SEAL APPEAR HEREON ASSUMES RESPONSIBILITY ONLY FOR WHAT APPEARS ON THIS PAGE, AND DISCLAIMS (PURSUANT TO SECTION 327.411 RSMO) SPECIFICATION, ESTIMATES, REPORTS, OR OTHER DOCUMENTS OR INSTRUMENTS NOT SEALED BY THE UNDERSIGNED PROFESSIONAL RELATING TO OR INTENDED TO BE USED FOR ANY PART OR PARTS OF THE PROJECT TO WHICH THIS PAGE REFERS.

@ BRIDGES OVER
BNSF R.R.(SB)
RTE. Z
UNION PACIFIC R.R.
HERKY HORINE RD.
JOACHIM CREEK
MCNUTT RD.

COLDMILLING

RESURFACING/OVERLAY

RESURFACING/OVERLAY

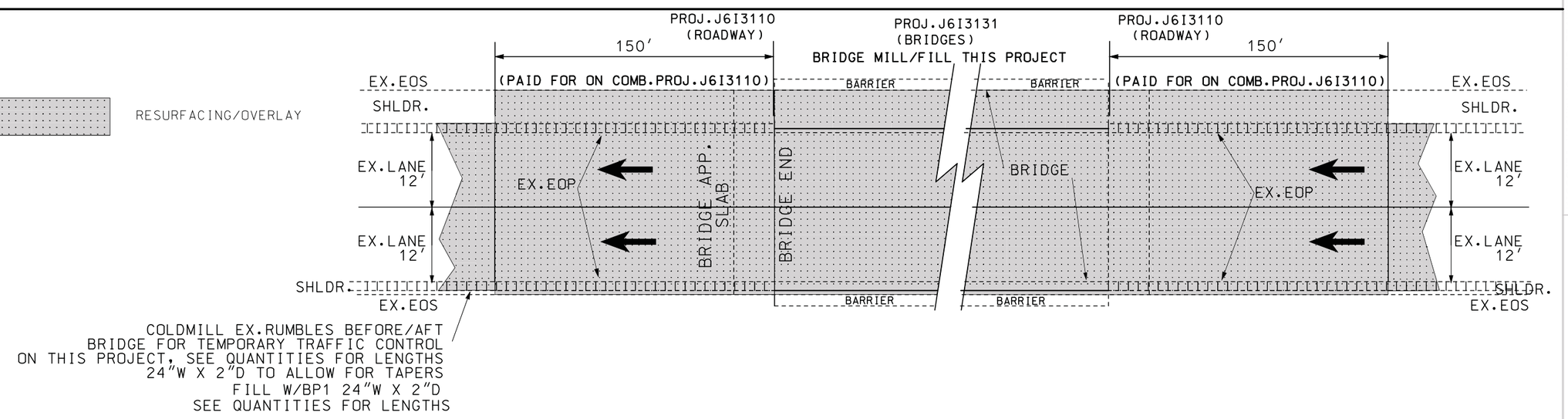

TEMP.TRAFFIC CONTROL TAPER AT BRIDGES

NOT TO SCALE

STATE OF MISSOURI
SHIRLEY J. NORRIS
NUMBER PE-28779
PROFESSIONAL ENGINEER

THIS SHEET HAS BEEN SIGNED, SEALED AND DATED ELECTRONICALLY.

DATE PREPARED	
9/29/2016	
ROUTE	STATE
I-55	MO
DISTRICT	SHEET NO.
SL	2
COUNTY	
JEFFERSON	
JOB NO.	
J6I3131	
CONTRACT ID.	
PROJECT NO.	
BRIDGE NO.	

DESCRIPTION

DATE

IF A SEAL IS PRESENT ON THIS SHEET IT HAS BEEN ELECTRONICALLY SEALED AND DATED.

MISSOURI HIGHWAYS AND TRANSPORTATION COMMISSION

105 WEST CAPITOL
JEFFERSON CITY, MO 65102
1-888-ASK-MODOT (1-888-275-6636)

TYPICAL SECTION SHEET
SHEET 1 OF 4

OVERLAY ON BRIDGES

(SEE COMBINATION PROJECT J6I3110 DEPTH TRANSITION DETAILS)

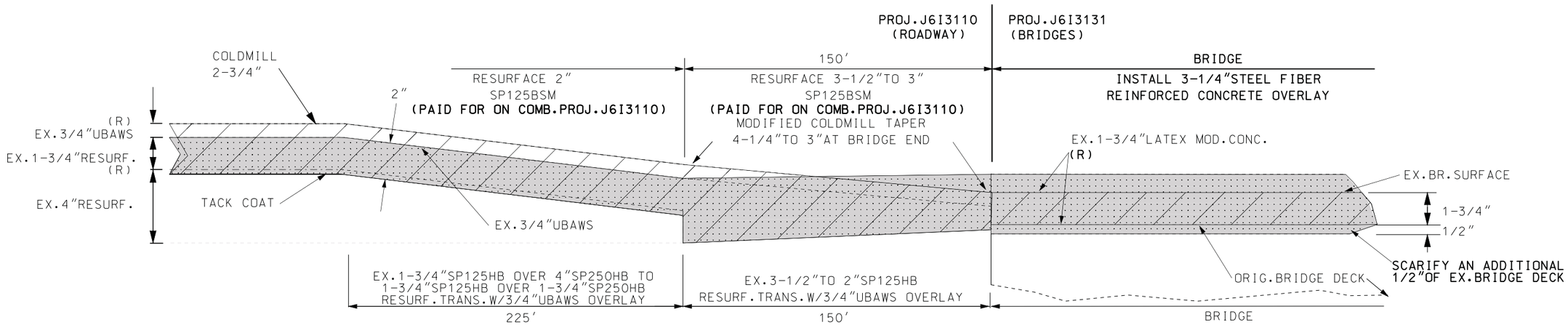

TYPICAL BRIDGE REHABILITATION

@ BRIDGE OVER

CENTRAL AVE.
THIRD STREET

COLDMILLING

RESURFACING/OVERLAY

DISCLAIMER
THE PROFESSIONAL WHOSE SIGNATURE AND PERSONAL SEAL APPEAR HEREON ASSUMES RESPONSIBILITY ONLY FOR WHAT APPEARS ON THIS PAGE, AND DISCLAIMS (PURSUANT TO SECTION 327.411 RSMO) SPECIFICATION, ESTIMATES, REPORTS, OR OTHER DOCUMENTS OR INSTRUMENTS NOT SEALED BY THE UNDERSIGNED PROFESSIONAL RELATING TO OR INTENDED TO BE USED FOR ANY PART OR PARTS OF THE PROJECT TO WHICH THIS PAGE REFERS.

RESURFACING/OVERLAY

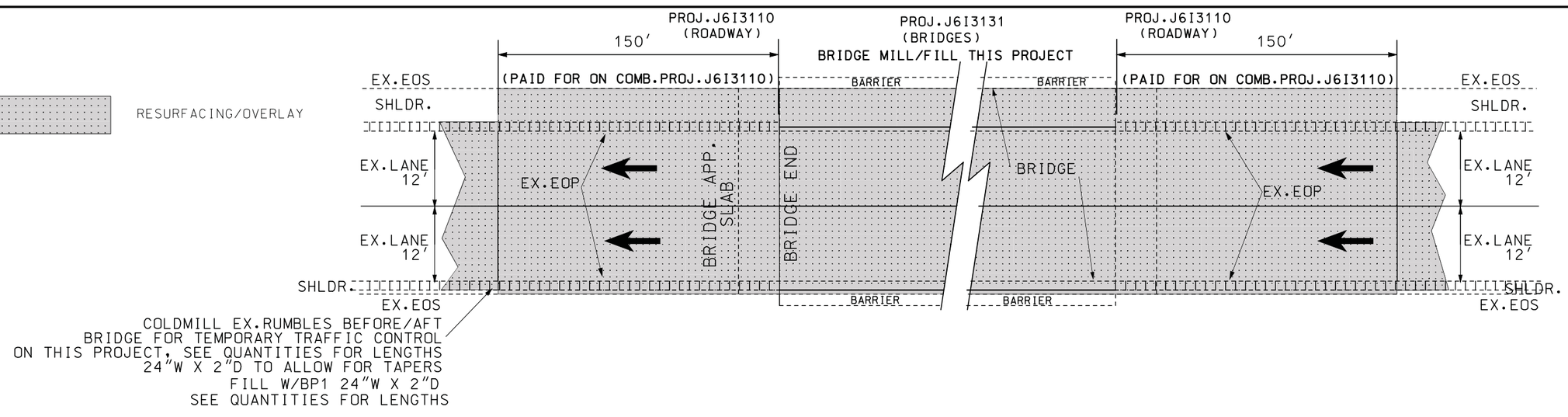

TEMP.TRAFFIC CONTROL TAPER AT BRIDGES

SEE PROJECT J6I3110 FOR BRIDGE LOCATIONS

NOT TO SCALE

STATE OF MISSOURI
SHIRLEY J. NORRIS
NUMBER PE-28779
PROFESSIONAL ENGINEER

THIS SHEET HAS BEEN SIGNED, SEALED AND DATED ELECTRONICALLY.

DATE PREPARED	9/29/2016
ROUTE	I-55
STATE	MO
DISTRICT	SL
SHEET NO.	2
COUNTY	JEFFERSON
JOB NO.	J6I3131
CONTRACT ID.	
PROJECT NO.	
BRIDGE NO.	

DESCRIPTION

DATE

MISSOURI HIGHWAYS AND TRANSPORTATION COMMISSION

105 WEST CAPITOL
JEFFERSON CITY, MO 65102
1-888-ASK-MODOT (1-888-275-6636)

TYPICAL SECTION SHEET
SHEET 2 OF 4

IF A SEAL IS PRESENT ON THIS SHEET IT HAS BEEN ELECTRONICALLY SEALED AND DATED.

OVERLAY ON BRIDGES

(SEE COMBINATION PROJECT J6I3110 DEPTH TRANSITION DETAILS)

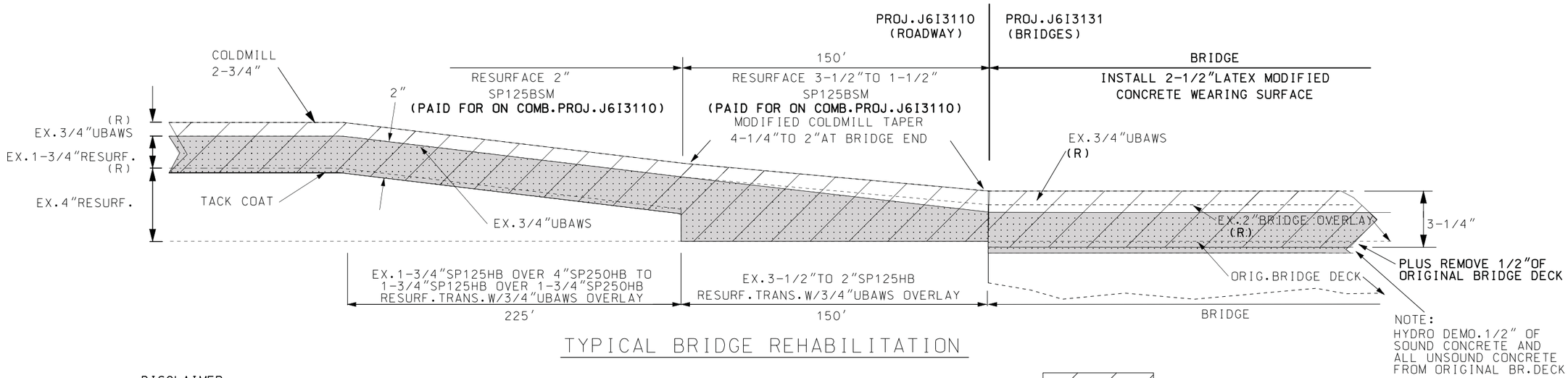

TYPICAL BRIDGE REHABILITATION

@ BRIDGES OVER

RTE 67
PLATTIN CREEK

COLDMILLING

RESURFACING/OVERLAY

DISCLAIMER
THE PROFESSIONAL WHOSE SIGNATURE AND PERSONAL SEAL APPEAR HEREON ASSUMES RESPONSIBILITY ONLY FOR WHAT APPEARS ON THIS PAGE, AND DISCLAIMS (PURSUANT TO SECTION 327.411 RSMO) SPECIFICATION, ESTIMATES, REPORTS, OR OTHER DOCUMENTS OR INSTRUMENTS NOT SEALED BY THE UNDERSIGNED PROFESSIONAL RELATING TO OR INTENDED TO BE USED FOR ANY PART OR PARTS OF THE PROJECT TO WHICH THIS PAGE REFERS.

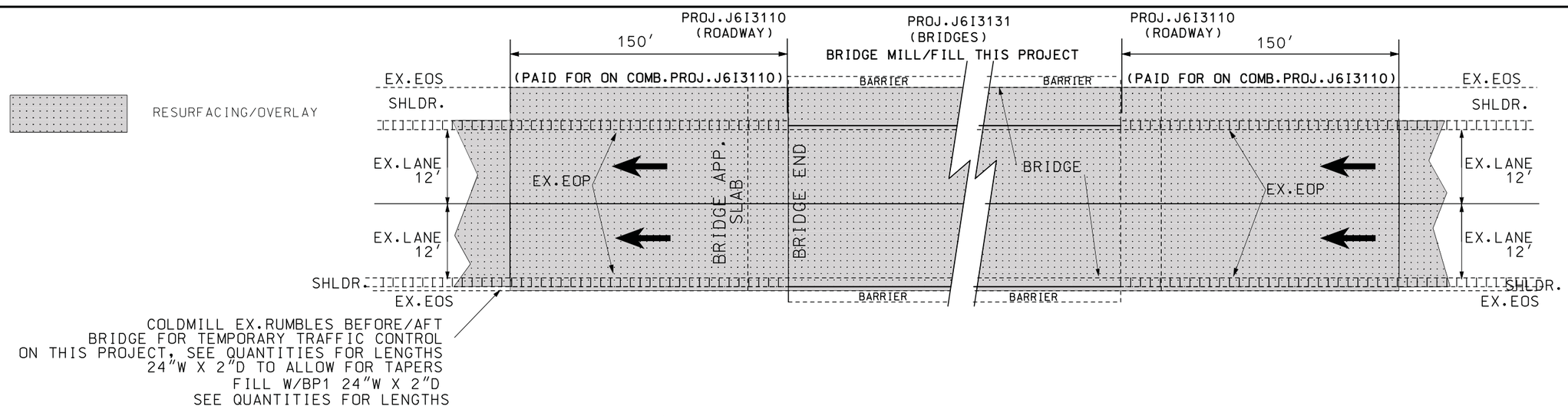

TEMP.TRAFFIC CONTROL TAPER AT BRIDGES

SEE PROJECT J6I3110 FOR BRIDGE LOCATIONS

NOT TO SCALE

STATE OF MISSOURI
SHIRLEY J. NORRIS
NUMBER PE-28779
PROFESSIONAL ENGINEER

THIS SHEET HAS BEEN SIGNED, SEALED AND DATED ELECTRONICALLY.

DATE PREPARED	
10/20/2016	
ROUTE	STATE
I-55	MO
DISTRICT	SHEET NO.
SL	2
COUNTY	
JEFFERSON	
JOB NO.	
J6I3131	
CONTRACT ID.	
PROJECT NO.	
BRIDGE NO.	

DATE	DESCRIPTION

MISSOURI HIGHWAYS AND TRANSPORTATION COMMISSION

105 WEST CAPITOL
JEFFERSON CITY, MO 65102
1-888-ASK-MODOT (1-888-275-6636)

TYPICAL SECTION SHEET
SHEET 3 OF 4

IF A SEAL IS PRESENT ON THIS SHEET IT HAS BEEN ELECTRONICALLY SEALED AND DATED.

OVERLAY ON BRIDGES

(SEE COMBINATION PROJECT J6I3110 DEPTH TRANSITION DETAILS)

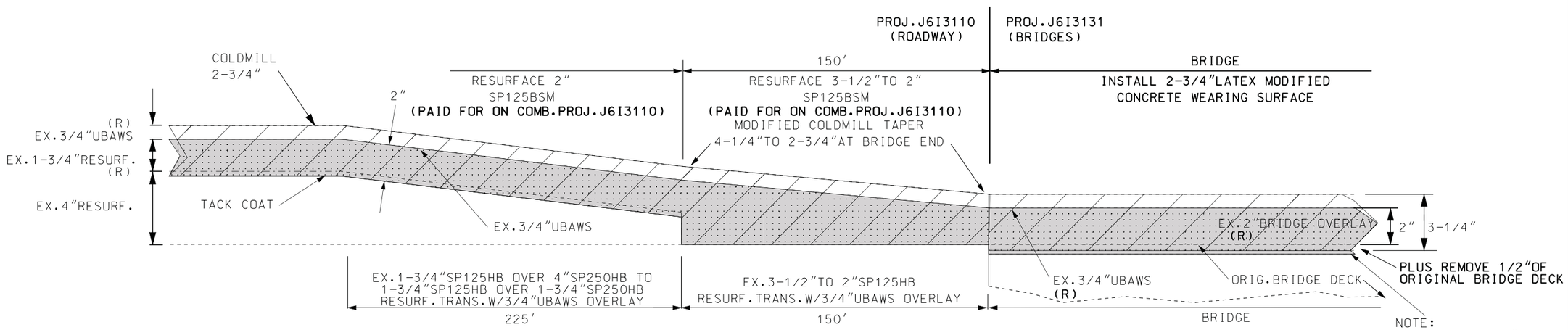

TYPICAL BRIDGE REHABILITATION

@ BRIDGE OVER

UNION PACIFIC RR
(@ S.END OF PROJECT)

COLDMILLING

RESURFACING/OVERLAY

DISCLAIMER
THE PROFESSIONAL WHOSE SIGNATURE AND PERSONAL SEAL APPEAR HEREON ASSUMES RESPONSIBILITY ONLY FOR WHAT APPEARS ON THIS PAGE, AND DISCLAIMS (PURSUANT TO SECTION 327.411 RSMO) SPECIFICATION, ESTIMATES, REPORTS, OR OTHER DOCUMENTS OR INSTRUMENTS NOT SEALED BY THE UNDERSIGNED PROFESSIONAL RELATING TO OR INTENDED TO BE USED FOR ANY PART OR PARTS OF THE PROJECT TO WHICH THIS PAGE REFERS.

RESURFACING/OVERLAY

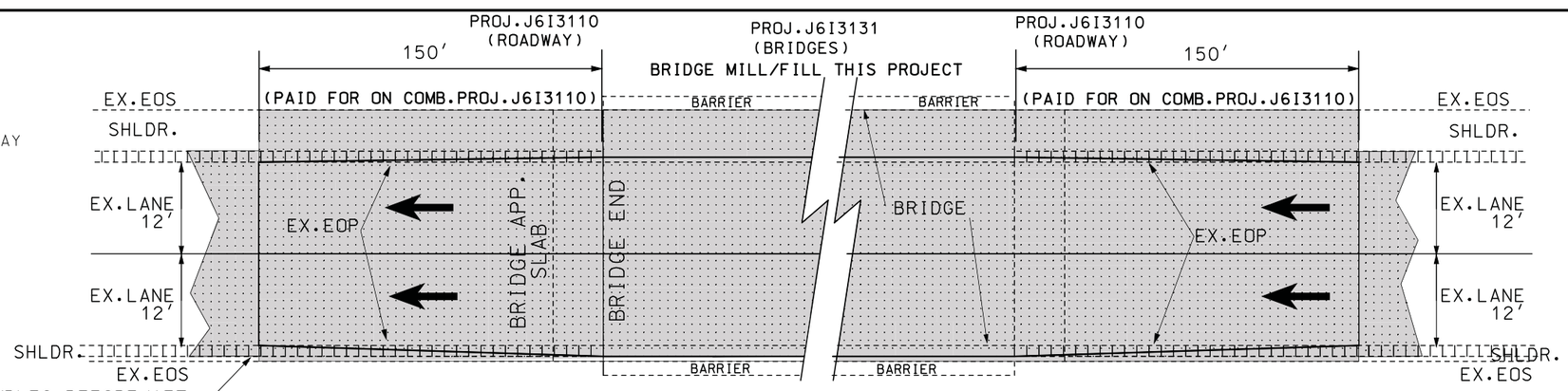

COLDMILL EX.RUMBLES BEFORE/AFT
BRIDGE FOR TEMPORARY TRAFFIC CONTROL
ON THIS PROJECT, SEE QUANTITIES FOR LENGTHS
24"W X 2"D TO ALLOW FOR TAPERS
FILL W/BP1 24"W X 2"D
SEE QUANTITIES FOR LENGTHS

TEMP.TRAFFIC CONTROL TAPER AT BRIDGES

SEE PROJECT J6I3110 FOR BRIDGE LOCATIONS

NOT TO SCALE

STATE OF MISSOURI
SHIRLEY J. NORRIS
NUMBER PE-28779
PROFESSIONAL ENGINEER

THIS SHEET HAS BEEN SIGNED, SEALED AND DATED ELECTRONICALLY.

DATE PREPARED	9/29/2016
ROUTE	I-55
STATE	MO
DISTRICT	SL
SHEET NO.	2
COUNTY	JEFFERSON
JOB NO.	J6I3131
CONTRACT ID.	
PROJECT NO.	
BRIDGE NO.	

DESCRIPTION

DATE

IF A SEAL IS PRESENT ON THIS SHEET IT HAS BEEN ELECTRONICALLY SEALED AND DATED.

MISSOURI HIGHWAYS AND TRANSPORTATION COMMISSION

105 WEST CAPITOL
JEFFERSON CITY, MO 65102
1-888-ASK-MODOT (1-888-275-6636)

TYPICAL SECTION SHEET
SHEET 4 OF 4

MOBILIZATION - TOTAL = 1 LUMP SUM

RAILROAD FLAGGER - SUBTOTAL = 5 WEEKS
PAY TOTAL = 1 LUMP SUM

DISCLAIMER
THE PROFESSIONAL WHOSE SIGNATURE AND PERSONAL SEAL APPEAR HEREON ASSUMES RESPONSIBILITY ONLY FOR WHAT APPEARS ON THIS PAGE, AND DISCLAIMS (PURSUANT TO SECTION 327.411 RSMO) SPECIFICATION, ESTIMATES, REPORTS, OR OTHER DOCUMENTS OR INSTRUMENTS NOT SEALED BY THE UNDERSIGNED PROFESSIONAL RELATING TO OR INTENDED TO BE USED FOR ANY PART OR PARTS OF THE PROJECT TO WHICH THIS PAGE REFERS.

WATER POLLUTION CONTROL MANAGER - TOTAL = 36 WEEKS

CONTRACTOR FURNISHED SURVEY & STAKING - TOTAL = 1 LUMP SUM

TRAFFIC SIGNAL MAINTENANCE AND PROGRAMMING = 1 LUMP SUM

WORK ZONE LIGHTING - TOTAL = 1 LUMP SUM

TEMPORARY EROSION CONTROL

PLAN SHEET NUMBER	STATION	STATION	LOCATION	SILT FENCE (LF)	SEDIMENT REMOVAL (CY)	REMARKS
4B	607+12.5	610+47.4	AT BENT 4 LOCATION	530.0	5.3	UNDER BOTH NB AND SB I-55 BRIDGES (ON SOUTH SIDE) AT BNSF RR
TOTAL				530.0	5.3	
PAY TOTAL				530	5	

PERMANENT EROSION CONTROL

PLAN SHEET NUMBER	STATION	STATION	LOCATION	DEPTH	EROSION CONTROL GEOTEXTILE (SY)	FURNISHING ROCK BLANKET TYPE 2 (CY)	PLACING ROCK BLANKET TYPE 2 (CY)	REMARKS
4B	607+12.5	610+47.4	AT BENT 4 LOCATION	24"	2440.0	1185.2	1185.2	UNDER BOTH NB AND SB I-55 BRIDGES (ON SOUTH SIDE) AT BNSF RR
TOTAL					2440.0	1185.2	1185.2	
PAY TOTAL					2440	1185	1185	

EARTHWORK

PLAN SHEET NUMBER	STATION	STATION	LOCATION	LINEAR GRADING CLASS II (STA)	REMARKS
4B	607+12.5	610+47.4	AT BENT 4 LOCATION	4.0	UNDER BOTH NB AND SB I-55 BRIDGES (ON SOUTH SIDE) AT BNSF RR
TOTAL				4.0	
PAY TOTAL				4.0	

STATE OF MISSOURI
SHIRLEY J. NORRIS
NUMBER PE-28779
PROFESSIONAL ENGINEER
THIS SHEET HAS BEEN SIGNED, SEALED AND DATED ELECTRONICALLY.

DATE PREPARED 9/30/2016
ROUTE I-55 | STATE MO
DISTRICT SL | SHEET NO. 3
COUNTY JEFFERSON
JOB NO. J6I3131
CONTRACT ID.
PROJECT NO.
BRIDGE NO.

DESCRIPTION	DATE

IF A SEAL IS PRESENT ON THIS SHEET IT HAS BEEN ELECTRONICALLY SEALED AND DATED.

MISSOURI HIGHWAYS AND TRANSPORTATION COMMISSION
105 WEST CAPITOL
JEFFERSON CITY, MO 65102
1-888-ASK-MODOT (1-888-275-6636)

SUMMARY OF QUANTITIES

SHEET 1 OF 4

EXISTING PAVEMENT MARKING REMOVAL

STAGE	TEMP. TCP SHEET X OF 76	RDWY	STA	STA	PAVEMENT MARKING REMOVAL (LF)	REMARKS
1A & 1B SB	1-7	I-55	588+97.00	642+48.00	4457	
2A & 2B SB	9-14	I-55	669+50.00	707+63.00	954	
3A & 3B SB	15-18	I-55	723+98.00	746+44.00	585	
4A & 4B SB	20-25	I-55	824+30.00	866+63.00	1128	
5A & 5B SB	27-30	I-55	921+96.00	961+00.00	920	
6A & 6B SB	32-37	I-55	991+20.00	1032+17.00	1025	
1A & 1B NB	38-43	I-55	1047+70.00	1006+00.00	1047	
2A & 2B NB	45-48	I-55	985+00.00	949+05.00	1016	
3A & 3B NB	51-57	I-55	891+40.00	840+21.00	2157	
4A & 4B NB	58-61	I-55	761+94.00	739+34.00	2260	
5A & 5B NB	63-68	I-55	722+90.00	685+31.00	940	
6A & 6B NB	69-72	I-55	658+57.00	622+55.00	901	
				TOTAL	17390	
					✳	

✳ FOR INFORMATION ONLY PAID FOR IN LUMP SUM TCP

DISCLAIMER
THE PROFESSIONAL WHOSE SIGNATURE AND PERSONAL SEAL APPEAR HEREON ASSUMES RESPONSIBILITY ONLY FOR WHAT APPEARS ON THIS PAGE, AND DISCLAIMS (PURSUANT TO SECTION 327.411 RSMO) SPECIFICATION, ESTIMATES, REPORTS, OR OTHER DOCUMENTS OR INSTRUMENTS NOT SEALED BY THE UNDERSIGNED PROFESSIONAL RELATING TO OR INTENDED TO BE USED FOR ANY PART OR PARTS OF THE PROJECT TO WHICH THIS PAGE REFERS.

NOTE:

PERMANENT PAVEMENT MARKING WILL BE QUANTIFIED AND PAID FOR ON COMBINATION PROJECT J6I3110

REMOVABLE MARKING TAPE

STAGE	TEMP. TCP SHEET X OF 76	RDWY	STA	STA	4"WHITE PREFORMED REMOVABLE MARKING TAPE (LF)	4"YELLOW PREFORMED REMOVABLE MARKING TAPE (LF)	REMARKS
1A SB	1-3	I-55	588+97.00	642+77.00		5380	TSY - TEMPORARY SOLID YELLOW TAPE
1A SB	2	I-55	588+97.00	615+00.00	2603		TSW - TEMPORARY SOLID WHITE TAPE
1A SB	3	I-55	634+87.00	642+48.00	761		TSW - TEMPORARY SOLID WHITE TAPE
1B SB	5-7	I-55	588+97.00	642+67.00	5370		TSW - TEMPORARY SOLID WHITE TAPE
2A SB	9-11	I-55	669+50.00	706+48.00		3698	TSY - TEMPORARY SOLID YELLOW TAPE
2B SB	12-14	I-55	669+50.00	707+48.00	3798		TSW - TEMPORARY SOLID WHITE TAPE
3A SB	15-16	I-55	723+98.00	746+14.00		2216	TSY - TEMPORARY SOLID YELLOW TAPE
3B SB	17-18	I-55	723+98.00	746+14.00	2216		TSW - TEMPORARY SOLID WHITE TAPE
4A SB	20-22	I-55	824+30.00	866+35.00		4205	TSY - TEMPORARY SOLID YELLOW TAPE
4B SB	23-25	I-55	824+30.00	866+35.00	4205		TSW - TEMPORARY SOLID WHITE TAPE
5A SB	27-28	I-55	921+96.00	963+07.00		4111	TSY - TEMPORARY SOLID YELLOW TAPE
5A SB	28A	I-55	949+30.00	957+98.00	868		TSW - TEMPORARY SOLID WHITE TAPE
5A SB	28A	I-55	959+78.00	959+78.00	95		TSW - TEMPORARY SOLID WHITE TAPE @ RAMP 6
5A SB	28A	I-55	963+07.00	963+07.00	424		TSW - TEMPORARY SOLID WHITE TAPE
5B SB	30	I-55	941+30.00	960+97.00	1967		TSW - TEMPORARY SOLID WHITE TAPE
6A SB	32-34	I-55	991+20.00	1031+91.00		4071	TSY - TEMPORARY SOLID YELLOW TAPE
6B SB	35-37	I-55	991+20.00	1031+91.00	4071		TSW - TEMPORARY SOLID WHITE TAPE
1A NB	38-40	I-55	1047+70.00	1006+15.00		4155	TSY - TEMPORARY SOLID YELLOW TAPE
1B NB	41-43	I-55	1047+70.00	1006+00.00	4178		TSW - TEMPORARY SOLID WHITE TAPE
2A NB	45-46	I-55	985+04.00	948+61.00		3643	TSY - TEMPORARY SOLID YELLOW TAPE
2A NB	46A	I-55	962+70.00	950+85.00	1185		TSW - TEMPORARY SOLID WHITE TAPE
2A NB	46A	I-55	950+91.00	950+32.00	59		TSW - TEMPORARY SOLID WHITE TAPE
2A NB	46A	I-55	950+91.00	948+61.00	230		TSW - TEMPORARY SOLID WHITE TAPE
2B NB	47-48	I-55	963+83.00	949+05.00	1478		TSW - TEMPORARY SOLID WHITE TAPE
3A NB	51-53	I-55	891+40.00	840+21.00		5119	TSY - TEMPORARY SOLID YELLOW TAPE
3B NB	55-56	I-55	891+40.00	874+86.00	1654		TSW - TEMPORARY SOLID WHITE TAPE
3B NB	56	I-55	874+86.00	871+36.00	86		TEMPORARY CLOSE SKIPS (3' STRIPE, 9' GAP)
3B NB	56	I-55	879+82.00	874+86.00		496	TSY - TEMPORARY SOLID YELLOW TAPE
3B NB	56	I-55	874+70.00	871+42.00	328		TSW - TEMPORARY SOLID WHITE TAPE
3B NB	56-57	I-55	871+42.00	840+21.00	3121		TSW - TEMPORARY SOLID WHITE TAPE
4A NB	58-59	I-55	761+94.00	739+78.00		2216	TSY - TEMPORARY SOLID YELLOW TAPE
4B NB	60-61	I-55	781+84.00	753+54.00	2830		TSW - TEMPORARY SOLID WHITE TAPE
4B NB	61	I-55	759+00.00	753+54.00		546	TSY - TEMPORARY SOLID YELLOW TAPE
4B NB	61	I-55	759+00.00	739+78.00	1922		TSW - TEMPORARY SOLID WHITE TAPE
5A NB	63-65	I-55	722+90.00	685+31.00		3759	TSY - TEMPORARY SOLID YELLOW TAPE
5B NB	66-68	I-55	722+90.00	685+31.00	3759		TSW - TEMPORARY SOLID WHITE TAPE
6A NB	69-70	I-55	658+57.00	622+55.00		3602	TSY - TEMPORARY SOLID YELLOW TAPE
6B NB	71-72	I-55	658+57.00	622+55.00	3602		TSW - TEMPORARY SOLID WHITE TAPE
			TOTAL		50810	47217	
					✳	✳	

✳FOR INFORMATION ONLY, PAID FOR IN LUMP SUM TCP

STATE OF MISSOURI
SHIRLEY J. NORRIS
NUMBER PE-28779
PROFESSIONAL ENGINEER
THIS SHEET HAS BEEN SIGNED, SEALED AND DATED ELECTRONICALLY.

DATE PREPARED 9/30/2016
ROUTE I-55 | STATE MO
DISTRICT SL | SHEET NO. 3
COUNTY JEFFERSON
JOB NO. J6I3131
CONTRACT ID.
PROJECT NO.
BRIDGE NO.

DATE	DESCRIPTION

IF A SEAL IS PRESENT ON THIS SHEET IT HAS BEEN ELECTRONICALLY SEALED AND DATED.

MISSOURI HIGHWAYS AND TRANSPORTATION COMMISSION
105 WEST CAPITOL
JEFFERSON CITY, MO 65102
1-888-ASK-MODOT (1-888-275-6636)

SUMMARY OF QUANTITIES

SHEET 2 OF 4

TRANSVERSE RUMBLE STRIPS

PLAN SHEET NO.	RDWY	STAGES	LOC	ADHESIVE TRANSVERSE RUMBLE STRIP (LF)	REMARKS
SB TRAFFIC CONTROL STAGING	SB I-55	6	*	720	6 STRIPS IN EACH ARRAY AT 10' LONG (SEE SPECIAL SHEET)
NB TRAFFIC CONTROL STAGING	NB I-55	6	*	720	6 STRIPS IN EACH ARRAY AT 10' LONG (SEE SPECIAL SHEET)
				1440	
				1440	

* LOCATION ON EACH TEMP.TRAFFIC CONTROL STAGE TO BE DETERMINED BY THE ENGINEER

NOTES: THERE WILL BE 12 STAGES THAT WILL REQUIRE ADHESIVE TRANSVERSE RUMBLES

ADHESIVE RUMBLES WILL BE FIGURED FOR 2 LANES IN 2 GROUPINGS PER STAGE

DISCLAIMER

THE PROFESSIONAL WHOSE SIGNATURE AND PERSONAL SEAL APPEAR HEREON ASSUMES RESPONSIBILITY ONLY FOR WHAT APPEARS ON THIS PAGE, AND DISCLAIMS (PURSUANT TO SECTION 327.411 RSMO) SPECIFICATION, ESTIMATES, REPORTS, OR OTHER DOCUMENTS OR INSTRUMENTS NOT SEALED BY THE UNDERSIGNED PROFESSIONAL RELATING TO OR INTENDED TO BE USED FOR ANY PART OR PARTS OF THE PROJECT TO WHICH THIS PAGE REFERS.

COLD MILL & FILL EX.RUMBLES AT BRIDGE TAPERS ON SHOULDERS (2' WIDE)

ROADWAY	DIRECTION	BRIDGE #	LOCATION	EX.SHOULDER WIDTH TO TCP SHOULDER WIDTH FEET	TAPER WIDTH FEET	TAPER NEEDED BEFORE & AFTER BRIDGE FEET	TOTAL DISTANCE FEET	A2 SHOULDERS SY	3" OR LESS COLD MILL EX. RUMBLE STRIPS SY	BP-1 (64-22) 2" DEPTH TONS	TACK COAT GAL	REMARKS
I-55	SB	A1035	OUTSIDE	EXIT LANE	EXIT LANE	EXIT LANE NONE NEEDED	0		0.0	0.0	0.0	BNSF RR
I-55	SB	A1035	INSIDE	4' - 1'	3.0	210	420		93.3	9.9	9.3	BNSF RR
I-55	SB	A0951	OUTSIDE	10' - 7.5'	2.5	175	350		77.8	8.3	7.8	RTE Z
I-55	SB	A0951	INSIDE	4' - 1'	3.0	210	420		93.3	9.9	9.3	RTE Z
I-55	SB	A0953	OUTSIDE	10' - 6'	4.0	280	560		124.4	13.2	12.4	UP RR
I-55	SB	A0953	INSIDE	4' - 1'	3.0	210	420		93.3	9.9	9.3	UP RR
I-55	SB	A0944	OUTSIDE	10' - 7.5'	2.5	175	350		77.8	8.3	7.8	HERKY HORINE
I-55	SB	A0944	INSIDE	4' - 1'	3.0	210	420		93.3	9.9	9.3	HERKY HORINE
I-55	SB	A0945	OUTSIDE	10' - 3'	7.0	490	980		217.8	23.2	21.8	JOACHIM CREEK
I-55	SB	A0945	INSIDE	4' - 1'	3.0	210	420		93.3	9.9	9.3	JOACHIM CREEK
I-55	SB	A0946	OUTSIDE	10' - 7.5'	2.5	175	350		77.8	8.3	7.8	MCNUTT
I-55	SB	A0946	INSIDE	4' - 1'	3.0	210	420		93.3	9.9	9.3	MCNUTT
I-55	SB	A0797	OUTSIDE	10' - 2.5'	7.5	525	1050		233.3	24.8	23.3	CENTRAL AV
I-55	SB	A0797	INSIDE	4' - 1'	3.0	210	420		93.3	9.9	9.3	CENTRAL AV
I-55	SB	A0830	OUTSIDE	10' - 2.5'	7.5	525	1050		233.3	24.8	23.3	3RD ST
I-55	SB	A0830	INSIDE	4' - 1'	3.0	210	420		93.3	9.9	9.3	3RD ST
I-55	SB	A0799	OUTSIDE	10' - 6'	4.0	280	560		124.4	13.2	12.4	RTE 67
I-55	SB	A0799	INSIDE	4' - 1'	3.0	210	420		93.3	9.9	9.3	RTE 67
I-55	SB	A2221	OUTSIDE	10' - 3'	7.0	490	980		217.8	23.2	21.8	UP RR
I-55	SB	A2221	INSIDE	4' - 1'	3.0	210	420		93.3	9.9	9.3	UP RR
I-55	SB	A2222	OUTSIDE	10' - 3'	7.0	490	980		217.8	23.2	21.8	PLATTIN CREEK
I-55	SB	A2222	INSIDE	4' - 1'	3.0	210	420		93.3	9.9	9.3	PLATTIN CREEK
I-55	NB	A2222	OUTSIDE	10' - 3'	7.0	490	980		217.8	23.2	21.8	PLATTIN CREEK
I-55	NB	A2222	INSIDE	4' - 1'	3.0	210	420		93.3	9.9	9.3	PLATTIN CREEK
I-55	NB	A2221	OUTSIDE	10' - 3'	7.0	490	980		217.8	23.2	21.8	UP RR
I-55	NB	A2221	INSIDE	4' - 1'	3.0	210	420		93.3	9.9	9.3	UP RR
I-55	NB	A0799	OUTSIDE	10' - 6'	4.0	280	560		124.4	13.2	12.4	RTE 67
I-55	NB	A0799	INSIDE	4' -1'	3.0	210	420		93.3	9.9	9.3	RTE 67
I-55	NB	A0830	OUTSIDE	10' - 2.5'	7.5	525	1050		233.3	24.8	23.3	3RD ST
I-55	NB	A0830	INSIDE	4' - 1'	3.0	210	420		93.3	9.9	9.3	3RD ST
I-55	NB	A0797	OUTSIDE	10' - 2.5'	7.5	525	1050		233.3	24.8	23.3	CENTRAL AV
I-55	NB	A0797	INSIDE	4' - 1'	3.0	210	420		93.3	9.9	9.3	CENTRAL AV
I-55	NB	A0946	OUTSIDE	10' - 7.5'	2.5	175	350		77.8	8.3	7.8	MCNUTT
I-55	NB	A0946	INSIDE	4' - 1'	3.0	210	420		93.3	9.9	9.3	MCNUTT
I-55	NB	A0945	OUTSIDE	10' - 3'	7.0	490	980		217.8	23.2	21.8	JOACHIM CREEK
I-55	NB	A0945	INSIDE	4' - 1'	3.0	210	420		93.3	9.9	9.3	JOACHIM CREEK
I-55	NB	A0944	OUTSIDE	10' - 7.5'	2.5	175	350		77.8	8.3	7.8	HERKY HORINE
I-55	NB	A0944	INSIDE	4' - 1'	3.0	210	420		93.3	9.9	9.3	HERKY HORINE
I-55	NB	A0953	OUTSIDE	10' - 6'	4.0	280	560		124.4	13.2	12.4	UP RR
I-55	NB	A0953	INSIDE	4' - 1'	3.0	210	420		93.3	9.9	9.3	UP RR
I-55	NB	A0951	OUTSIDE	10' - 7.5'	2.5	175	350		77.8	8.3	7.8	RTE Z
I-55	NB	A0951	INSIDE	4' - 1'	3.0	210	420		93.3	9.9	9.3	RTE Z
								5164				AREAS OF TAPERS
							TOTAL	5164.0	5164.4	549.1	516.4	
							PAY TOTAL	*5164.0	5164	549.1	520	

TAPER LENGTHS FIGURED ON TAPER WIDTH X SPEED (70MPH)

COLD MILL FOR RUMBLES TO BE 2 INCHES IN DEPTH AND 2 FEET WIDE

*A2 SHOULDER QUANTITY IS TOTAL DISTANCE OF TAPERS DIVIDED BY 4 TIMES 8 FEET WIDE

STATE OF MISSOURI
SHIRLEY J. NORRIS
NUMBER PE-28779
PROFESSIONAL ENGINEER

THIS SHEET HAS BEEN SIGNED, SEALED AND DATED ELECTRONICALLY.

DATE PREPARED 9/30/2016

ROUTE	STATE
I-55	MO
DISTRICT	SHEET NO.
SL	3

COUNTY JEFFERSON

JOB NO. J6I3131

CONTRACT ID.

PROJECT NO.

BRIDGE NO.

DATE	DESCRIPTION

MISSOURI HIGHWAYS AND TRANSPORTATION COMMISSION

105 WEST CAPITOL
JEFFERSON CITY, MO 65102
1-888-ASK-MODOT (1-888-275-6636)

IF A SEAL IS PRESENT ON THIS SHEET IT HAS BEEN ELECTRONICALLY SEALED AND DATED.

SUMMARY OF QUANTITIES

SHEET 3 OF 4

EFFECTIVE: 06-08-2016

SIGN	SIZE (IN.)	AREA (SQ. FT.)	QTY	TOTAL AREA	QTY RELOC	TOTAL RELOC AREA	DESCRIPTION
WARNING SIGNS							
W01-1L	48X48	16.00					TURN (SYMBOL LEFT ARROW)
W01-1R	48X48	16.00					TURN (SYMBOL RIGHT ARROW)
W01-2L	48X48	16.00					CURVE (SYMBOL LEFT ARROW)
W01-2R	48X48	16.00					CURVE (SYMBOL RIGHT ARROW)
W01-3L	48X48	16.00					REVERSE TURN (SYMBOL LEFT ARROW)
W01-3R	48X48	16.00					REVERSE TURN (SYMBOL RIGHT ARROW)
W01-4L	48X48	16.00					REVERSE CURVE (SYMBOL LEFT ARROW)
W01-4R	48X48	16.00					REVERSE CURVE (SYMBOL RIGHT ARROW)
W01-4bL	48X48	16.00					DOUBLE ARROW REVERSE CURVE (SYMBOL LEFT ARROWS)
W01-4bR	48X48	16.00					DOUBLE ARROW REVERSE CURVE (SYMBOL RIGHT ARROWS)
W01-4cL	48X48	16.00					TRIPLE ARROW REVERSE CURVE (SYMBOL LEFT ARROWS)
W01-4cR	48X48	16.00					TRIPLE ARROW REVERSE CURVE (SYMBOL RIGHT ARROWS)
W01-6	60X30	12.50					HORIZONTAL ARROW (SYMBOL)
W01-6a	72X36	18.00					HORIZONTAL ARROW (SYMBOL ON PERMANENT BARRICADE)
W01-7	60X30	12.50					DOUBLE HEAD HORIZONTAL ARROW (SYMBOL)
W01-7a	72X36	18.00					DOUBLE HEAD HORIZONTAL ARROW (SYMBOL ON PERMANENT BARRICADE)
W01-8	18X24	3.00					CHEVRON (SYMBOL)
W01-8a	30X36	7.50					CHEVRON (SYMBOL FOR DIVIDED HIGHWAYS)
W03-1	48X48	16.00					STOP AHEAD (SYMBOL)
W03-2	48X48	16.00	1	16.00			YIELD AHEAD (SYMBOL)
W03-3	48X48	16.00					SIGNAL AHEAD (SYMBOL)
W03-4	48X48	16.00					BE PREPARED TO STOP
W03-5	48X48	16.00	2	32.00			SPEED LIMIT AHEAD (2-55 M.P.H.)
W04-1L	48X48	16.00					MERGE (SYMBOL FROM LEFT)
W04-1aL	48X48	16.00	2	32.00			MERGE (LEFT ARROW AT LANE DROP)
W04-1R	48X48	16.00					MERGE (SYMBOL FROM RIGHT)
W04-1aR	48X48	16.00	2	32.00			MERGE (RIGHT ARROW AT LANE DROP)
W05-1	48X48	16.00					ROAD/BRIDGE/RAMP NARROWS
W05-3	48X48	16.00					ONE LANE BRIDGE
W05-5	48X48	16.00					NARROW LANES
W06-1	48X48	16.00					DIVIDED HIGHWAY (SYMBOL)
W06-2	48X48	16.00					DIVIDED HIGHWAY END (SYMBOL)
W06-3	48X48	16.00					TWO WAY TRAFFIC (SYMBOL)
W07-3a	30X24	5.00					NEXT XX MILES (PLAQUE)
W08-1	48X48	16.00					BUMP
W08-2	48X48	16.00					DIP
W08-3	48X48	16.00					PAVEMENT ENDS
W08-4	48X48	16.00					SOFT SHOULDER
W08-5	48X48	16.00					SLIPPERY WHEN WET (SYMBOL)
W08-6	48X48	16.00					TRUCK CROSSING WITH FLAGS
W08-6c	48X48	16.00					TRUCK ENTRANCE
W08-7	36X36	9.00					LOOSE GRAVEL
W08-9	48X48	16.00					LOW SHOULDER
W08-11	48X48	16.00					UNEVEN LANES
W08-12	48X48	16.00					NO CENTER LINE
W10-1	42 RND.	9.62					RAILROAD CROSSING
W012-1	24X24	4.00					DOUBLE DOWN ARROW (SYMBOL)
W012-2	48X48	16.00					LOW CLEARANCE (SYMBOL)
W012-2x	24X18	3.00					LOW CLEARANCE (PLAQUE)
W012-2a	84X24	14.00					OVERHEAD LOW CLEARANCE (FEET AND INCHES)
W08-15	48X48	16.00					GROOVED PAVEMENT
W08-15p	30X24	5.00					MOTORCYCLE (PLAQUE)
W08-17	48X48	16.00					SHOULDER DROP-OFF (SYMBOL)
W08-17p	30X24	5.00					SHOULDER DROP-OFF (PLAQUE)
SPECIAL	120X60	50.00					LOW CLEARANCE XX FT XX IN XX MILES AHEAD
SPECIAL	120X60	50.00					WIDTH RESTRICTION XX FT XX IN XX MILES AHEAD
W013-1	30X30	6.25					ADVISORY SPEED (PLAQUE)
W016-2	30X24	5.00	2	10.00			XXX FEET (PLAQUE) (1000)
W016-3	30X24	5.00					X MILE (PLAQUE)
W020-1	48X48	16.00	7	112.00			ROAD/BRIDGE/RAMP WORK AHEAD
W020-2	48X48	16.00	3	48.00			DETOUR AHEAD
W020-3	48X48	16.00	2	32.00			ROAD CLOSED AHEAD
W020-4	48X48	16.00					ONE LANE ROAD AHEAD
W020-5	48X48	16.00	2	32.00			RIGHT/CENTER/LEFT LANE CLOSED AHEAD
W020-5a	48X48	16.00	2	32.00			2 RIGHT/CENTER/LEFT LANES CLOSED AHEAD
W020-6a	48X48	16.00	2	32.00			RIGHT/CENTER/LEFT LANE CLOSED
W020-7a	48X48	16.00					FLAGGER (SYMBOL) WITH FLAGS
W021-2	36X36	9.00					FRESH OIL
W021-5	48X48	16.00					SHOULDER WORK AHEAD
W022-1	48X48	16.00					BLASTING ZONE AHEAD
W022-2	42X36	10.50					TURN OFF 2-WAY RADIO AND PHONE
W022-3	42X36	10.50					END BLASTING ZONE
W022-6e	21X15	2.19					WET PAINT (ARROW PIVOTS)
GUIDE SIGNS							
SPECIAL	36X36	9.00					FRESH OIL/LOOSE GRAVEL
E05-1	36X48	12.00	1	12.00			GORE EXIT
E05-2	48X36	12.00					EXIT OPEN
E05-2a	48X36	12.00					EXIT CLOSED
G020-1	60X24	10.00					ROAD WORK NEXT XX MILES
G020-2	48X24	8.00					END ROAD WORK
G020-4	36X18	4.50					PILOT CAR FOLLOW ME
SPECIAL	42X30	8.75					PLEASE WAIT FOR PILOT CAR
G020-5aP	36X24	6.00	3	18.00			WORK ZONE (PLAQUE)
M04-8a	24X18	3.00	2	6.00			END DETOUR
M04-9L	48X36	12.00					DETOUR (LEFT ARROW)
M04-9R	48X36	12.00					DETOUR (RIGHT ARROW)
M04-10L	48X18	6.00					DETOUR (ARROW LEFT)
M04-10R	48X18	6.00					DETOUR (ARROW RIGHT)
REGULATORY SIGNS							
R1-1	48X48	13.25					STOP
R1-2	48 TRI.	6.93	1	6.93			YIELD
R1-2a	36X36	9.00					TO ONCOMING TRAFFIC (PLAQUE)
R1-3	20X9	1.25					X-WAY (PLAQUE)
R2-1	36X48	12.00	5	60.00			SPEED LIMIT XX(3-55 M.P.H.,2-70 M.P.H.)
R3-7R	30X30	6.25					RIGHT LANE MUST TURN RIGHT
R4-1	36X48	12.00					DO NOT PASS
R4-2	36X48	12.00					PASS WITH CARE
R4-7aL	36X48	12.00					KEEP LEFT (HORIZONTAL ARROW)
R4-7a	36X48	12.00					KEEP RIGHT (HORIZONTAL ARROW)
R5-1	30X30	6.25					DO NOT ENTER
R5-1a	36X24	6.00					WRONG WAY
R6-1L	48X18	6.00					ONE WAY ARROW (LEFT)
R6-1R	48X18	6.00					ONE WAY ARROW (RIGHT)
R6-2L	24X30	5.00					ONE WAY (LEFT)
R6-2R	24X30	5.00					ONE WAY (RIGHT)
R11-2	48X30	10.00	5	50.00			ROAD CLOSED
R3-33	78X36	19.50	2	39.00			RIGHT LANE MUST EXIT
MISCELLANEOUS SIGNS							
SPECIAL	30X24	5.00	4	20.00			TAKE TURNS
SPECIAL	30X24	5.00	2	10.00			TAKE TURNS AT MERGE
SPECIAL	36x78	19.50	11	214.50			DETOUR SOUTH "55"
SPECIAL	36x60	15.00	7	105.00			DETOUR "Z"
SPECIAL	36x78	19.50	3	58.50			DETOUR NORTH "55"
SPECIAL	36x60	15.00	8	120.00			DETOUR "67"
SPECIAL	72x48	24.00	4	96.00			SOUTH "55" (W/ Z) BOUND RAMP CLOSED
SPECIAL	108X72	54.00	1	54.00			NB 67 EXIT 174A CLOSED USE EXIT 175
SPECIAL	96X72	48.00	1	48.00			SB I-55 EXIT CLOSED USE DETOUR
SPECIAL	96X60	40.00	1	40.00			NB RTE Z EXIT 180 CLOSED USE EXIT 185
SPECIAL	96X60	40.00	1	40.00			SB RTE Z EXIT 180 CLOSED USE EXIT 178
SPECIAL	108X72	54.00	1	54.00			SB 67 EXIT 174B CLOSED USE EXIT 175
SPECIAL	96x72	48.00	1	48.00			NB I-55 EXIST CLOSED USE DETOUR
616-10.05 CONSTRUCTION SIGNS TOTAL				1510			
616-10.10 RELOCATED SIGNS TOTAL							*

* NO DIRECT PAYMENT WILL BE MADE FOR RELOCATING SIGNS OR DEVICES.

ITEM NUMBER	TOTAL QTY	DESCRIPTION
6122008		IMPACT ATTENUATOR (8 SAND BARRELS)
6122009		IMPACT ATTENUATOR (9 SAND BARRELS)
6122010		IMPACT ATTENUATOR (10 SAND BARRELS)
6122012		IMPACT ATTENUATOR (12 SAND BARRELS)
6122014		IMPACT ATTENUATOR (14 SAND BARRELS)
6122017		IMPACT ATTENUATOR (17 SAND BARRELS)
6122019	** 2	IMPACT ATTENUATOR (19 SAND BARRELS)
6122020	** 24	REPLACEMENT SAND BARREL
6122030	** 24	IMPACT ATTENUATOR (RELOCATION)
6123000A	2	TRUCK OR TRAILER MOUNTED ATTENUATOR (TMA)
6161007		SPEED LIMIT AND STROBE LIGHT ASSEMBLY
6161008	16	ADVANCED WARNING RAIL SYSTEM
6161009	5	FLAG ASSEMBLY
6161020		CHANNELIZER (DRUM-LIKE)
6161022		CHANNELIZER (CONES)
6161024		CHANNELIZER (TRIM LINE) WITH LIGHT
6161025	170	CHANNELIZER (TRIM LINE)
6161026		CHANNELIZER (VERTICAL PANEL)
6161027		CHANNELIZER (VERTICAL PANEL) WITH LIGHT
6161028		CHANNELIZER
6161030	11	TYPE III MOVEABLE BARRICADE
6161031		TYPE III MOVEABLE BARRICADE WITH LIGHT
6161033	32	DIRECTION INDICATOR BARRICADE
6161034		DIRECTION INDICATOR BARRICADE, WITH LIGHT
6161040	2	FLASHING ARROW PANEL
6161047		TYPE III OBJECT MARKER
6161051		WARNING LIGHT, TYPE A
6161052		WARNING LIGHT, TYPE B
6161053		WARNING LIGHT, TYPE C
6161055		SEQUENTIAL FLASHING WARNING LIGHT
6161070		TUBULAR MARKER
6161095	** 4	RADAR SPEED ADVISORY SYSTEM
6161096		CHANGEABLE MESSAGE SIGN, COMMISSION FURNISHED/RETAINED
6161098A		CHANGEABLE MESSAGE SIGN WITHOUT COMMUNICATION INTERFACE, CONTRACTOR FURNISHED/RETAINED
6161099		CHANGEABLE MESSAGE SIGN WITH COMMUNICATION INTERFACE, CONTRACTOR FURNISHED/RETAINED
6161099	4	NON-INTRUSIVE DETECTOR
6169902	** 7	CHANGEABLE MESSAGE SIGN NTCIP COMPLIANT CONTRACTOR FURNISHED/RETAINED
6173600D	** 1567	CONTRACTOR FURNISHED/RETAINED TEMPORARY TRAFFIC BARRIER
6173700B		TEMPORARY TRAFFIC BARRIER ANCHORED, CONTRACTOR FURNISHED/RETAINED
6174000A		TEMPORARY TRAFFIC BARRIER HEIGHT TRANSITION
6175010A	** 16362	RELOCATING TEMPORARY TRAFFIC BARRIER
6175011B		RELOCATING TEMPORARY TRAFFIC BARRIER ANCHORED
6177000B		COMMISSION FURNISHED/RETAINED TEMPORARY TRAFFIC BARRIER HEIGHT TRANSITION

DISCLAIMER

THE PROFESSIONAL WHOSE SIGNATURE AND PERSONAL SEAL APPEAR HEREON ASSUMES RESPONSIBILITY ONLY FOR WHAT APPEARS ON THIS PAGE, AND DISCLAIMS (PURSUANT TO SECTION 327.411 RSMO) SPECIFICATION, ESTIMATES, REPORTS, OR OTHER DOCUMENTS OR INSTRUMENTS NOT SEALED BY THE UNDERSIGNED PROFESSIONAL RELATING TO OR INTENDED TO BE USED FOR ANY PART OR PARTS OF THE PROJECT TO WHICH THIS PAGE REFERS.

TEMP TRAFFIC CONTROL = 1 LUMP SUM

** NOT INCLUDED IN TEMP TRAFFIC CONTROL LUMP SUM BID ITEM

STATE OF MISSOURI
SHIRLEY J. NORRIS
NUMBER PE-28779
PROFESSIONAL ENGINEER

THIS SHEET HAS BEEN SIGNED, SEALED AND DATED ELECTRONICALLY.

DATE PREPARED 9/30/2016

ROUTE	STATE
I-55	MO
DISTRICT	SHEET NO.
SL	3

COUNTY: JEFFERSON

JOB NO. J6I3131

CONTRACT ID.

PROJECT NO.

BRIDGE NO.

DATE	DESCRIPTION

IF A SEAL IS PRESENT ON THIS SHEET IT HAS BEEN ELECTRONICALLY SEALED AND DATED.

MISSOURI HIGHWAYS AND TRANSPORTATION COMMISSION
105 WEST CAPITOL
JEFFERSON CITY, MO 65102
1-888-ASK-MODOT (1-888-275-6636)

SUMMARY OF QUANTITIES

SHEET 4 OF 4

DISCLAIMER
THE PROFESSIONAL WHOSE SIGNATURE AND PERSONAL SEAL APPEAR HEREON ASSUMES RESPONSIBILITY ONLY FOR WHAT APPEARS ON THIS PAGE, AND DISCLAIMS (PURSUANT TO SECTION 327.411 RSMO) SPECIFICATION, ESTIMATES, REPORTS, OR OTHER DOCUMENTS OR INSTRUMENTS NOT SEALED BY THE UNDERSIGNED PROFESSIONAL RELATING TO OR INTENDED TO BE USED FOR ANY PART OR PARTS OF THE PROJECT TO WHICH THIS PAGE REFERS.

BRIDGE OVERLAY LOCATION MAP

JEFFERSON COUNTY

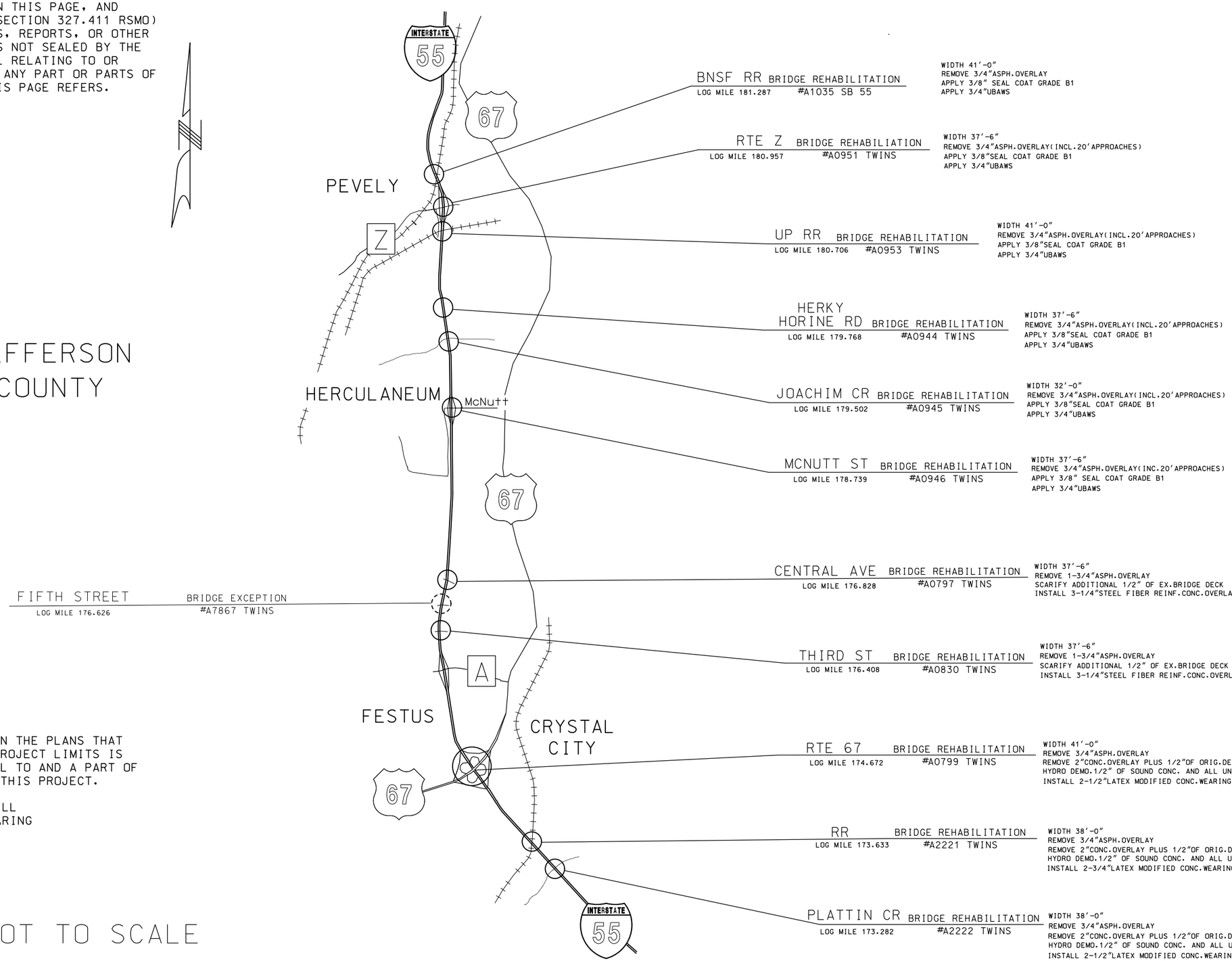

NOTE:

ANY WORK INDICATED ON THE PLANS THAT EXTENDS BEYOND THE PROJECT LIMITS IS CONSIDERED INCIDENTAL TO AND A PART OF THE CONSTRUCTION OF THIS PROJECT.

NO DIRECT PAYMENT WILL BE MADE FOR ANY CLEARING AND GRUBBING.

NOT TO SCALE

STATE OF MISSOURI
SHIRLEY J. NORRIS
NUMBER PE-28779
PROFESSIONAL ENGINEER
THIS SHEET HAS BEEN SIGNED, SEALED AND DATED ELECTRONICALLY.

DATE PREPARED	9/29/2016
ROUTE	I-55
STATE	MO
DISTRICT	SL
SHEET NO.	4A
COUNTY	JEFFERSON
JOB NO.	J6I3131
CONTRACT ID.	
PROJECT NO.	
BRIDGE NO.	

DESCRIPTION

DATE

MISSOURI HIGHWAYS AND TRANSPORTATION COMMISSION
105 WEST CAPITOL
JEFFERSON CITY, MO 65102
1-888-ASK-MODOT (1-888-275-6636)

PLAN SHEET
SHEET 1 OF 2
LOCATION SKETCH

IF A SEAL IS PRESENT ON THIS SHEET IT HAS BEEN ELECTRONICALLY SEALED AND DATED.

ANY WORK INDICATED ON THE PLANS THAT EXTENDS BEYOND THE PROJECT LIMITS IS CONSIDERED INCIDENTAL TO AND A PART OF THE CONSTRUCTION OF THIS PROJECT.

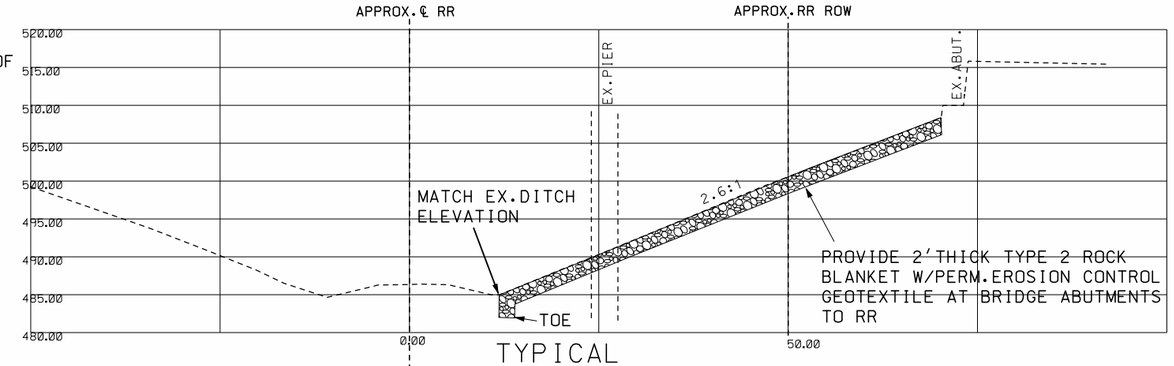

TYPICAL
(UNDER BRIDGES)

DISCLAIMER

THE PROFESSIONAL WHOSE SIGNATURE AND PERSONAL SEAL APPEAR HEREON ASSUMES RESPONSIBILITY ONLY FOR WHAT APPEARS ON THIS PAGE, AND DISCLAIMS (PURSUANT TO SECTION 327.411 RSMO) SPECIFICATION, ESTIMATES, REPORTS, OR OTHER DOCUMENTS OR INSTRUMENTS NOT SEALED BY THE UNDERSIGNED PROFESSIONAL RELATING TO OR INTENDED TO BE USED FOR ANY PART OR PARTS OF THE PROJECT TO WHICH THIS PAGE REFERS.

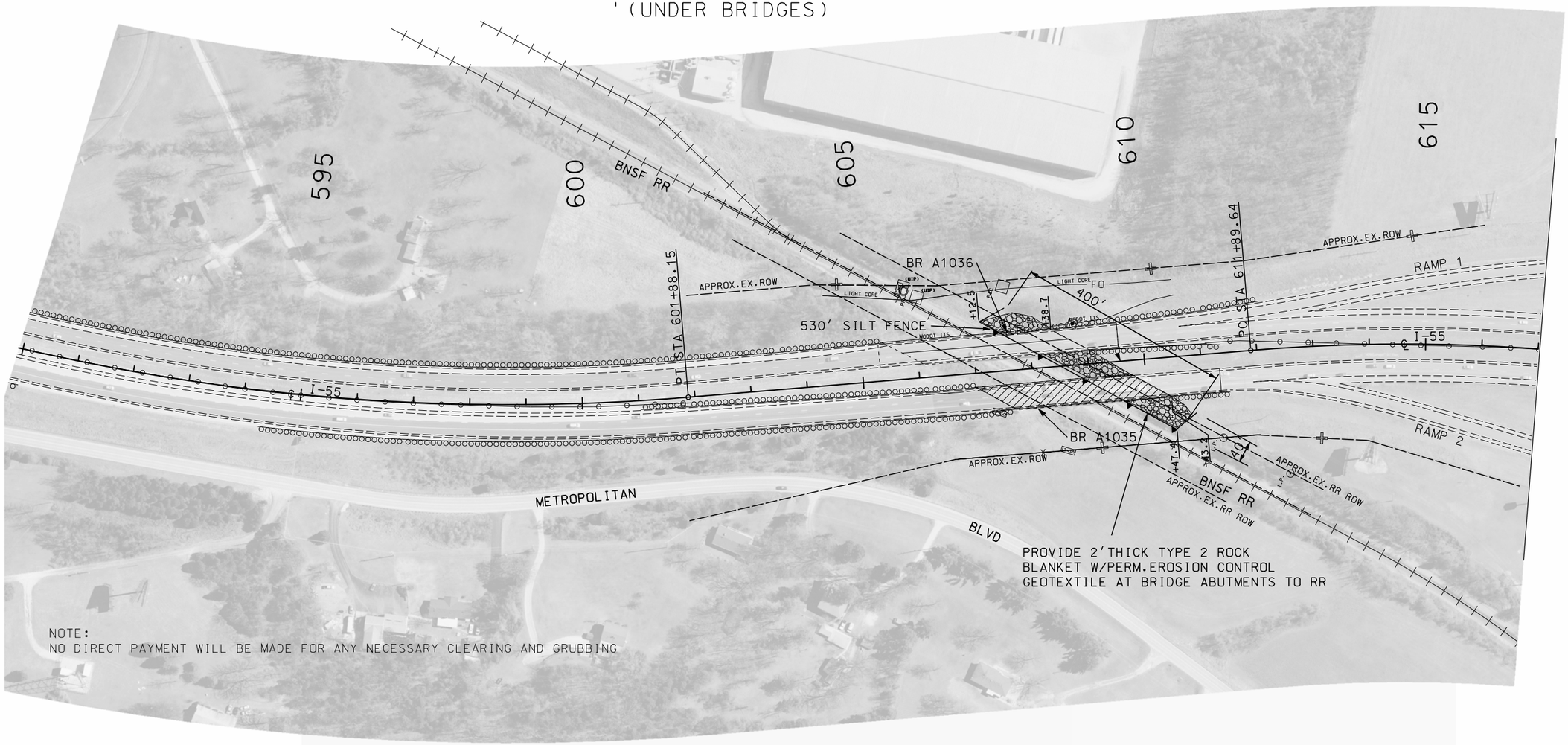

NOTE:
NO DIRECT PAYMENT WILL BE MADE FOR ANY NECESSARY CLEARING AND GRUBBING

BRIDGE REHABILITATION WORK

ROCK BLANKET W/PERM.EROSION CONTROL GEOTEXTILE

SILT FENCE

SCALE
0 100 200 300 400 500

STATE OF MISSOURI
SHIRLEY J. NORRIS
NUMBER PE-28779
PROFESSIONAL ENGINEER
THIS SHEET HAS BEEN SIGNED, SEALED AND DATED ELECTRONICALLY.

DATE PREPARED	9/30/2016
ROUTE	I-55
STATE	MO
DISTRICT	SL
SHEET NO.	4B
COUNTY	JEFFERSON
JOB NO.	J6I3131
CONTRACT ID.	
PROJECT NO.	
BRIDGE NO.	

DESCRIPTION	DATE

MISSOURI HIGHWAYS AND TRANSPORTATION COMMISSION
105 WEST CAPITOL
JEFFERSON CITY, MO 65102
1-888-ASK-MODOT (1-888-275-6636)

PLAN SHEET
SHEET 2 OF 2

IF A SEAL IS PRESENT ON THIS SHEET IT HAS BEEN ELECTRONICALLY SEALED AND DATED.

ADHESIVE TRANSVERSE RUMBLE STRIP DETAIL

DISCLAIMER
THE PROFESSIONAL WHOSE SIGNATURE AND PERSONAL SEAL APPEAR HEREON ASSUMES RESPONSIBILITY ONLY FOR WHAT APPEARS ON THIS PAGE, AND DISCLAIMS (PURSUANT TO SECTION 327.411 RSMO) SPECIFICATION, ESTIMATES, REPORTS, OR OTHER DOCUMENTS OR INSTRUMENTS NOT SEALED BY THE UNDERSIGNED PROFESSIONAL RELATING TO OR INTENDED TO BE USED FOR ANY PART OR PARTS OF THE PROJECT TO WHICH THIS PAGE REFERS.

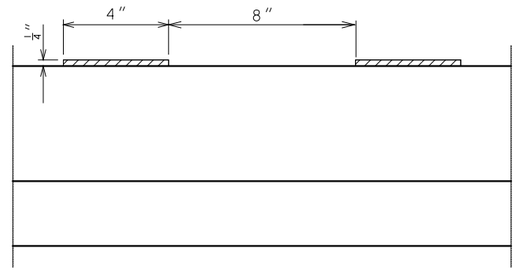

SECTION A-A

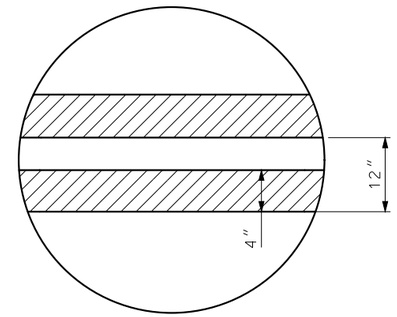

DETAIL B

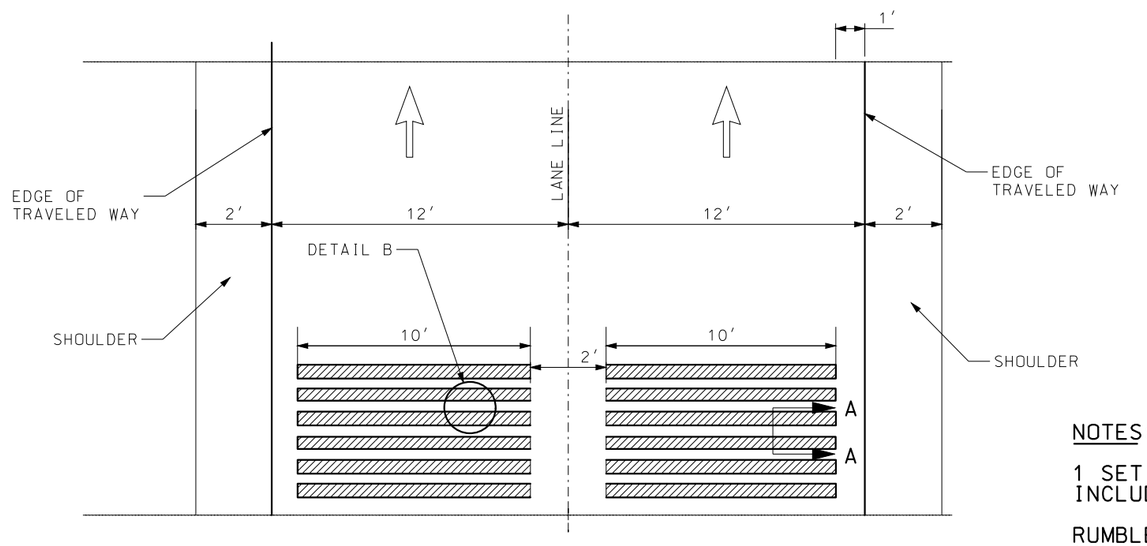

INSTALLATION DETAIL

NOTES:

1 SET OF RUMBLE STRIPS INCLUDES 6 ROWS PER LANE.

RUMBLES FOR TEMPORARY TRAFFIC CONTROL APPLICATIONS

RUMBLE STRIP LOCATIONS TO BE FINALIZED BY THE ENGINEER.

NOT TO SCALE

STATE OF MISSOURI
SHIRLEY J. NORRIS
NUMBER PE-28779
PROFESSIONAL ENGINEER

THIS SHEET HAS BEEN SIGNED, SEALED AND DATED ELECTRONICALLY.

DATE PREPARED	9/30/2016
ROUTE	I-55
STATE	MO
DISTRICT	SL
SHEET NO.	5
COUNTY	JEFFERSON
JOB NO.	J6I3131
CONTRACT ID.	
PROJECT NO.	
BRIDGE NO.	

DATE	DESCRIPTION

MISSOURI HIGHWAYS AND TRANSPORTATION COMMISSION
105 WEST CAPITOL
JEFFERSON CITY, MO 65102
1-888-ASK-MODOT (1-888-275-6636)

SPECIAL SHEET
ADHESIVE TRANSVERSE
RUMBLE STRIP
SHEET 1 OF 1

REV.

IF A SEAL IS PRESENT ON THIS SHEET IT HAS BEEN ELECTRONICALLY SEALED AND DATED.

NOTE:
TEMPORARY TRAFFIC CONTROL SHOWN ON COMBINATION PROJECT J6I3110 WILL BE PAID FOR ON THIS PROJECT. J6I3110 TEMPORARY TRAFFIC CONTROL IS FOR INFORMATIONAL USE ONLY.

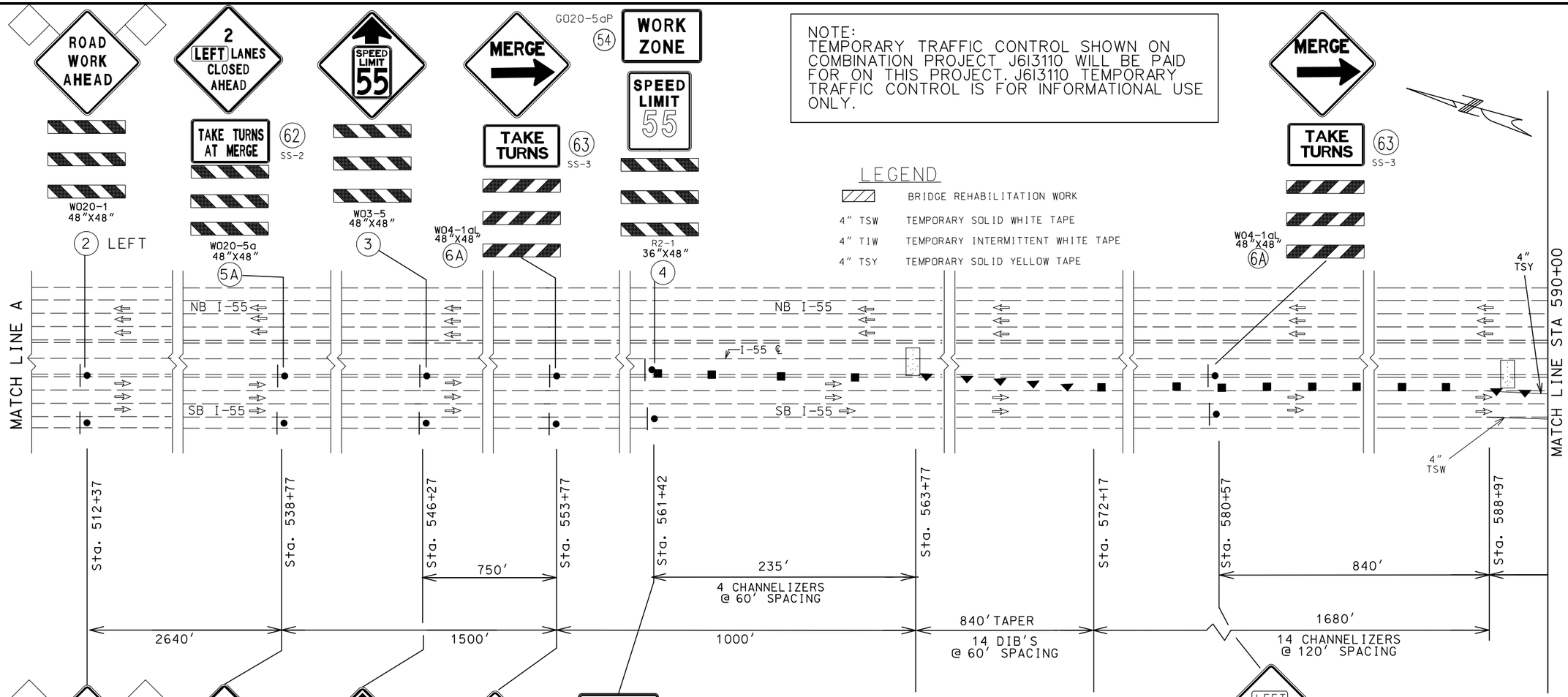

LEGEND

	BRIDGE REHABILITATION WORK
4" TSW	TEMPORARY SOLID WHITE TAPE
4" TIW	TEMPORARY INTERMITTENT WHITE TAPE
4" TSY	TEMPORARY SOLID YELLOW TAPE

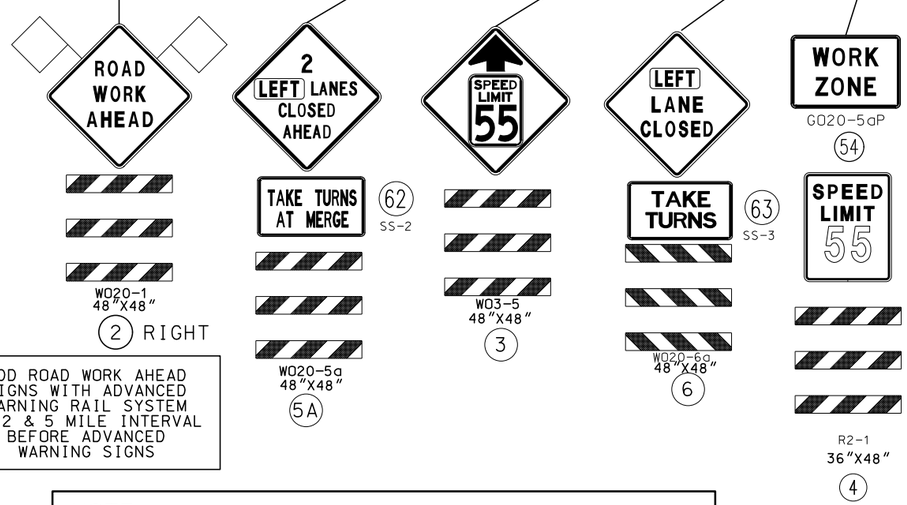

ADD ROAD WORK AHEAD SIGNS WITH ADVANCED WARNING RAIL SYSTEM AT 2 & 5 MILE INTERVAL BEFORE ADVANCED WARNING SIGNS

NOTE:
SEE TCP SHEET 74 OF 76 FOR DYNAMIC ZIPPER MERGE SYSTEM DETAILS AND SIGNING.

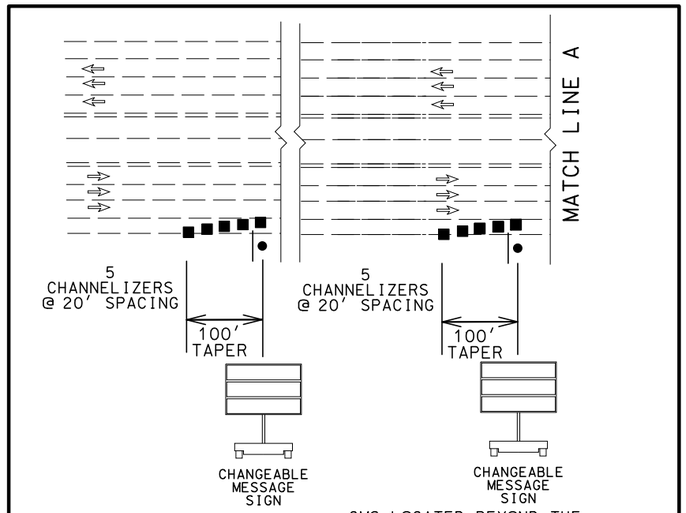

CMS LOCATED BEYOND THE MAXIMUM QUEUE LENGTH.

CMS LOCATED BEYOND THE ESTIMATED QUEUE LENGTH AT THE TIME WHEN SYSTEM ACTIVATION WILL OCCUR.

DISCLAIMER
THE PROFESSIONAL WHOSE SIGNATURE AND PERSONAL SEAL APPEAR HEREON ASSUMES RESPONSIBILITY ONLY FOR WHAT APPEARS ON THIS PAGE, AND DISCLAIMS (PURSUANT TO SECTION 327.411 RSMO) SPECIFICATION, ESTIMATES, REPORTS, OR OTHER DOCUMENTS OR INSTRUMENTS NOT SEALED BY THE UNDERSIGNED PROFESSIONAL RELATING TO OR INTENDED TO BE USED FOR ANY PART OR PARTS OF THE PROJECT TO WHICH THIS PAGE REFERS.

TRAFFIC CONTROL LEGEND

- SIGN (SINGLE SIDED)
- CHANNELIZER (TRIM-LINE)
- DIRECTION INDICATOR BARRICADE
- TEMPORARY TRAFFIC BARRIER
- CHANGEABLE MESSAGE SIGN
- IMPACT ATTENUATOR
- TYPE III MOVABLE BARRICADE

NOT TO SCALE

STATE OF MISSOURI
SHIRLEY J. NORRIS
NUMBER PE-28779
PROFESSIONAL ENGINEER
THIS SHEET HAS BEEN SIGNED, SEALED AND DATED ELECTRONICALLY.

DATE PREPARED	9/29/2016
ROUTE	I-55
STATE	MO
DISTRICT	SL
SHEET NO.	6
COUNTY	JEFFERSON
JOB NO.	J6I3131
CONTRACT ID.	
PROJECT NO.	
BRIDGE NO.	

DESCRIPTION
DATE

IF A SEAL IS PRESENT ON THIS SHEET IT HAS BEEN ELECTRONICALLY SEALED AND DATED.

MISSOURI HIGHWAYS AND TRANSPORTATION COMMISSION
105 WEST CAPITOL
JEFFERSON CITY, MO 65102
1-888-ASK-MODOT (1-888-275-6636)

TRAFFIC CONTROL
STAGE 1A SB

SHEET 1 OF 76

TRAFFIC CONTROL LEGEND

- SIGN (SINGLE SIDED)
- CHANNELIZER (TRIM-LINE)
- DIRECTION INDICATOR BARRICADE
- TEMPORARY TRAFFIC BARRIER (TTB)
- CHANGEABLE MESSAGE SIGN
- IMPACT ATTENUATOR
- TYPE III MOVABLE BARRICADE

LEGEND

4" TSW	TEMPORARY SOLID WHITE TAPE
4" TIW	TEMPORARY INTERMITTENT WHITE TAPE
4" TSY	TEMPORARY SOLID YELLOW TAPE

NOTE:
TEMPORARY TRAFFIC CONTROL SHOWN ON COMBINATION PROJECT J6I3110 WILL BE PAID FOR ON THIS PROJECT. J6I3110 TEMPORARY TRAFFIC CONTROL IS FOR INFORMATIONAL USE ONLY.

DISCLAIMER
THE PROFESSIONAL WHOSE SIGNATURE AND PERSONAL SEAL APPEAR HEREON ASSUMES RESPONSIBILITY ONLY FOR WHAT APPEARS ON THIS PAGE, AND DISCLAIMS (PURSUANT TO SECTION 327.411 RSMO) SPECIFICATION, ESTIMATES, REPORTS, OR OTHER DOCUMENTS OR INSTRUMENTS NOT SEALED BY THE UNDERSIGNED PROFESSIONAL RELATING TO OR INTENDED TO BE USED FOR ANY PART OR PARTS OF THE PROJECT TO WHICH THIS PAGE REFERS.

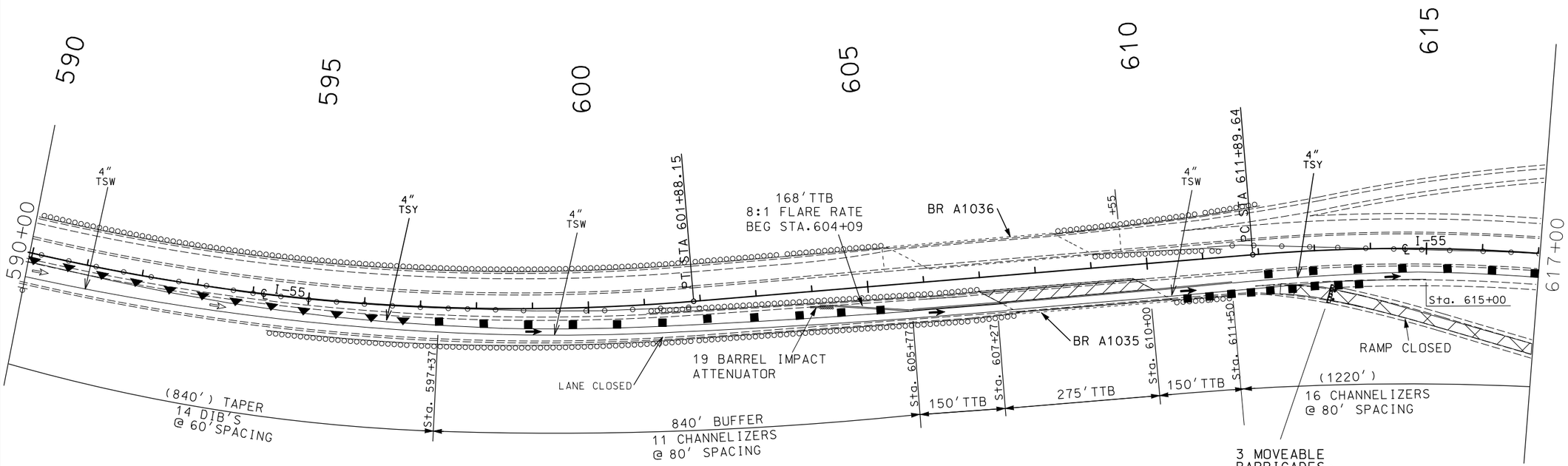

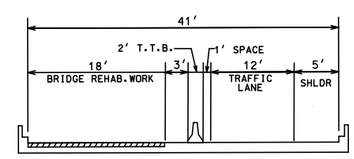

TYPICAL AT BRIDGE A1035 (SB I-55) REHABILITATION
STA 607+27 TO 610+00 (I-55 ℄)

(IN DIRECTION OF INCREASING STATIONING)

STAGE 1A SB

29
2 - R11-2
48"X48"

BRIDGE REHABILITATION WORK

SCALE
0 100 200 300 400 500

SHOWN TEMP. TRAFFIC CONTROL SIGNS AND DEVICES
TO BE RELOCATED FROM PRIOR STAGE AT NO DIRECT PAY

STATE OF MISSOURI
SHIRLEY J. NORRIS
NUMBER PE-28779
PROFESSIONAL ENGINEER

THIS SHEET HAS BEEN SIGNED, SEALED AND DATED ELECTRONICALLY.

DATE PREPARED	9/29/2016
ROUTE	I-55
STATE	MO
DISTRICT	SL
SHEET NO.	7
COUNTY	JEFFERSON
JOB NO.	J6I3131
CONTRACT ID.	
PROJECT NO.	
BRIDGE NO.	

DESCRIPTION	DATE

IF A SEAL IS PRESENT ON THIS SHEET IT HAS BEEN ELECTRONICALLY SEALED AND DATED.

MISSOURI HIGHWAYS AND TRANSPORTATION COMMISSION
105 WEST CAPITOL
JEFFERSON CITY, MO 65102
1-888-ASK-MODOT (1-888-275-6636)

TRAFFIC CONTROL
STAGE 1A SB

SHEET 2 OF 76

TRAFFIC CONTROL LEGEND

- SIGN (SINGLE SIDED)
- CHANNELIZER (TRIM-LINE)
- DIRECTION INDICATOR BARRICADE
- TEMPORARY TRAFFIC BARRIER (TTB)
- CHANGEABLE MESSAGE SIGN
- IMPACT ATTENUATOR
- TYPE III MOVABLE BARRICADE

LEGEND

4" TSW	TEMPORARY SOLID WHITE TAPE
4" TIW	TEMPORARY INTERMITTENT WHITE TAPE
4" TSY	TEMPORARY SOLID YELLOW TAPE

DISCLAIMER
THE PROFESSIONAL WHOSE SIGNATURE AND PERSONAL SEAL APPEAR HEREON ASSUMES RESPONSIBILITY ONLY FOR WHAT APPEARS ON THIS PAGE, AND DISCLAIMS (PURSUANT TO SECTION 327.411 RSMO) SPECIFICATION, ESTIMATES, REPORTS, OR OTHER DOCUMENTS OR INSTRUMENTS NOT SEALED BY THE UNDERSIGNED PROFESSIONAL RELATING TO OR INTENDED TO BE USED FOR ANY PART OR PARTS OF THE PROJECT TO WHICH THIS PAGE REFERS.

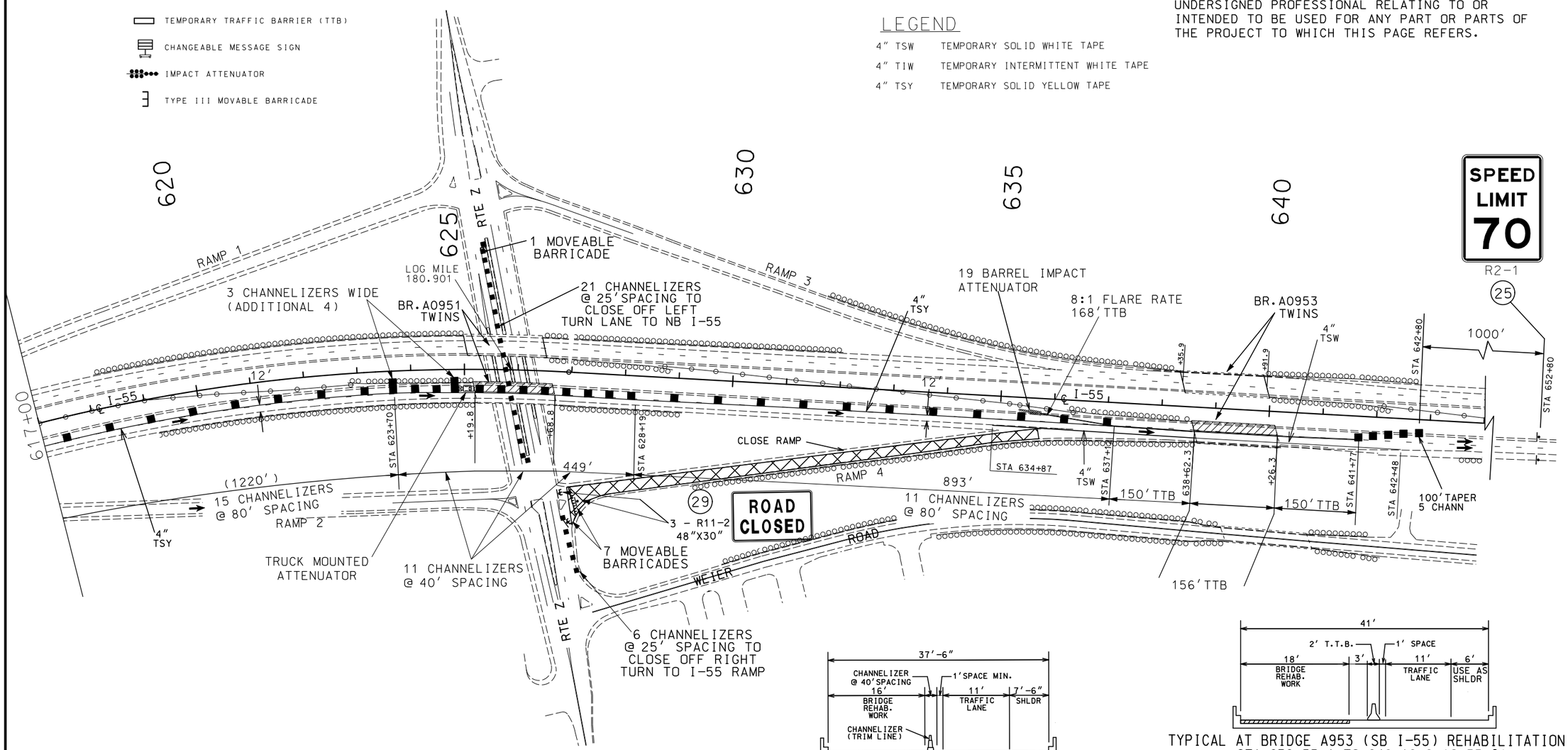

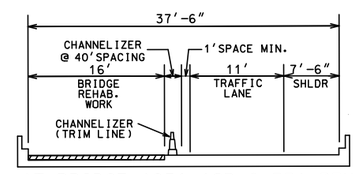

TYPICAL AT BRIDGE A951 (SB I-55) REHABILITATION
STA 625+19.8 TO 626+68.8 (I-55 ℄)

(IN DIRECTION OF INCREASING STATIONING)

STAGE 1A SB

TYPICAL AT BRIDGE A953 (SB I-55) REHABILITATION
STA 638+55.1 TO 640+18.8 (I-55 ℄)

(IN DIRECTION OF INCREASING STATIONING)

STAGE 1A SB

BRIDGE REHABILITATION WORK

NOTE:
TEMPORARY TRAFFIC CONTROL SHOWN ON COMBINATION PROJECT J6I3110 WILL BE PAID FOR ON THIS PROJECT. J6I3110 TEMPORARY TRAFFIC CONTROL IS FOR INFORMATIONAL USE ONLY.

SHOWN TEMP. TRAFFIC CONTROL SIGNS AND DEVICES TO BE RELOCATED FROM PRIOR STAGE AT NO DIRECT PAY

SCALE
0 100 200 300 400 500

STATE OF MISSOURI
SHIRLEY J. NORRIS
NUMBER PE-28779
PROFESSIONAL ENGINEER
THIS SHEET HAS BEEN SIGNED, SEALED AND DATED ELECTRONICALLY.

DATE PREPARED	9/29/2016
ROUTE	I-55
STATE	MO
DISTRICT	SL
SHEET NO.	8
COUNTY	JEFFERSON
JOB NO.	J6I3131
CONTRACT ID.	
PROJECT NO.	
BRIDGE NO.	

DESCRIPTION
DATE

IF A SEAL IS PRESENT ON THIS SHEET IT HAS BEEN ELECTRONICALLY SEALED AND DATED.

MISSOURI HIGHWAYS AND TRANSPORTATION COMMISSION
105 WEST CAPITOL
JEFFERSON CITY, MO 65102
1-888-ASK-MODOT (1-888-275-6636)

TRAFFIC CONTROL
STAGE 1A SB

SHEET 3 OF 76

DETOUR FOR SOUTHBOUND I-55 @ ROUTE Z EXIT-RAMP AND ON-RAMP CLOSURES DURING STAGE 1A & 1B CONSTRUCTION

(THIS SHEET IS IDENTICAL TO SHEET 8 OF 76)

DISCLAIMER
THE PROFESSIONAL WHOSE SIGNATURE AND PERSONAL SEAL APPEAR HEREON ASSUMES RESPONSIBILITY ONLY FOR WHAT APPEARS ON THIS PAGE, AND DISCLAIMS (PURSUANT TO SECTION 327.411 RSMO) SPECIFICATION, ESTIMATES, REPORTS, OR OTHER DOCUMENTS OR INSTRUMENTS NOT SEALED BY THE UNDERSIGNED PROFESSIONAL RELATING TO OR INTENDED TO BE USED FOR ANY PART OR PARTS OF THE PROJECT TO WHICH THIS PAGE REFERS.

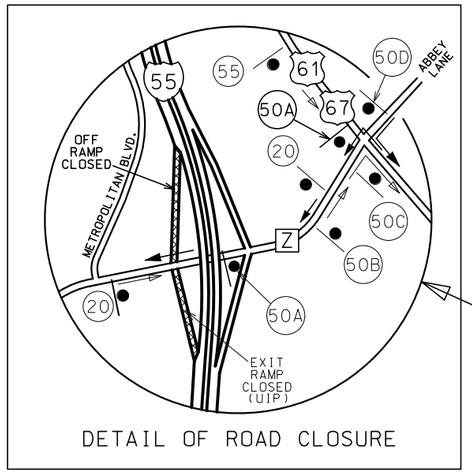

DETAIL OF ROAD CLOSURE

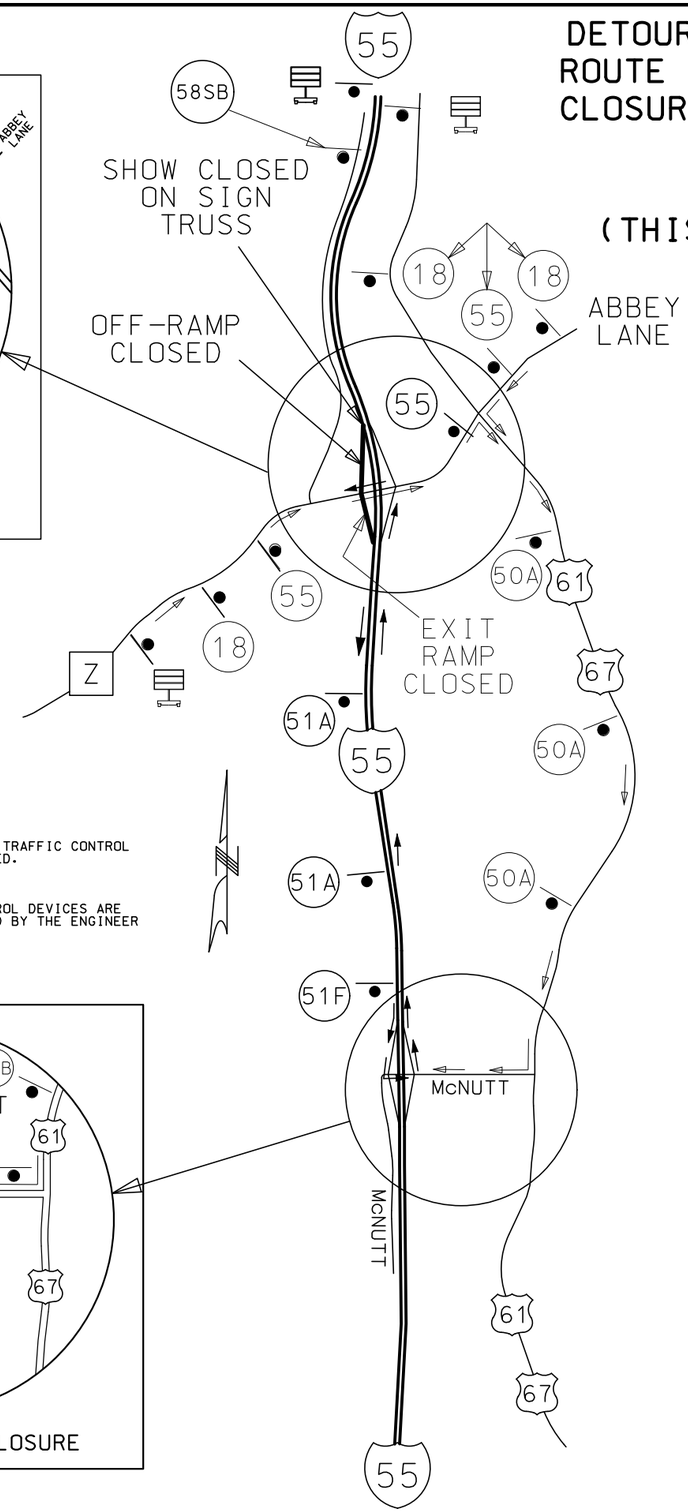

TRAFFIC CONTROL LEGEND

- SIGN (SINGLE SIDED)
- CHANGEABLE MESSAGE BOARD (WITH 5 CHANNELIZERS)

GENERAL NOTES:

1. ANY EXISTING SIGNS THAT CONFLICT WITH THE TRAFFIC CONTROL PLAN SHALL BE COMPLETELY COVERED OR REMOVED.
2. ALL SIGNS SHALL BE GROUND-MOUNTED.
3. ALL DISTANCES AND SPACING OF TRAFFIC CONTROL DEVICES ARE APPROXIMATE AND MAY BE REVISED AS DIRECTED BY THE ENGINEER TO FIT FIELD CONDITIONS.

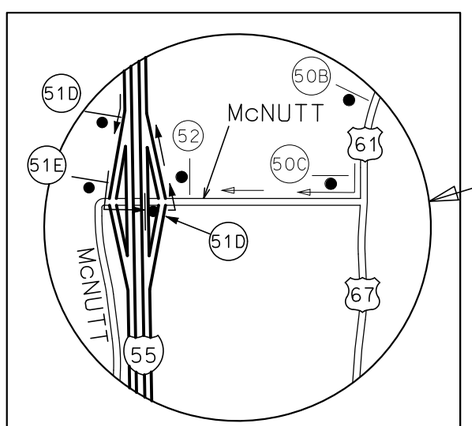

DETAIL OF ROAD CLOSURE

W020-2
48"X48"
(18)

RAMP PLAQUE USED IN PLACE OF ROAD PLAQUE

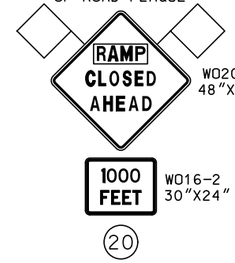

W020-3
48"X48"

W016-2
30"X24"
(20)

M04-8a
24"X18"
(52)

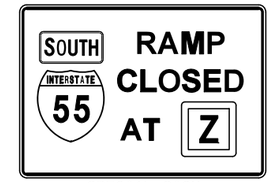

SPECIAL SIGN
72"X48"
(55)
(SEE SIGN DETAIL SHEET)

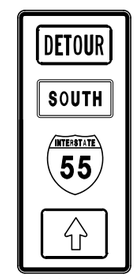

SPECIAL SIGN
36"X78"
(50A)
(SEE SIGN DETAIL SHEET)

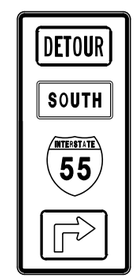

SPECIAL SIGN
36"X78"
(50B)
(SEE SIGN DETAIL SHEET)

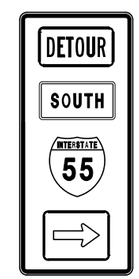

SPECIAL SIGN
36"X78"
(50C)
(SEE SIGN DETAIL SHEET)

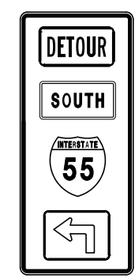

SPECIAL SIGN
36"78"
(50D)
(SEE SIGN DETAIL SHEET)

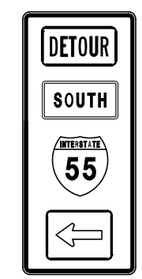

SPECIAL SIGN
36"78"
(50E)
(SEE SIGN DETAIL SHEET)

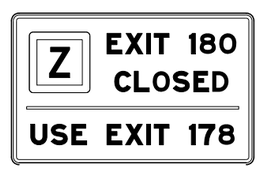

SPECIAL SIGN
96"X60"
(58SB)
(SEE SIGN DETAIL SHEET)

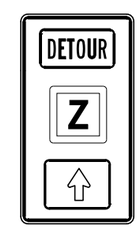

SPECIAL SIGN
36"X60"
(51A)
(SEE SIGN DETAIL SHEET)

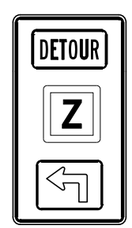

SPECIAL SIGN
36"X60"
(51D)
(SEE SIGN DETAIL SHEET)

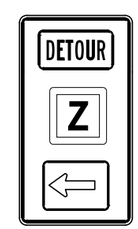

SPECIAL SIGN
36"X60"
(51E)
(SEE SIGN DETAIL SHEET)

SPECIAL SIGN
36"X60"
(51F)
(SEE SIGN DETAIL SHEET)

NOT TO SCALE

STATE OF MISSOURI
SHIRLEY J. NORRIS
NUMBER PE-28779
PROFESSIONAL ENGINEER
THIS SHEET HAS BEEN SIGNED, SEALED AND DATED ELECTRONICALLY.

DATE PREPARED	
9/29/2016	
ROUTE	STATE
I-55	MO
DISTRICT	SHEET NO.
SL	9
COUNTY	
JEFFERSON	
JOB NO.	
J6I3131	
CONTRACT ID.	
PROJECT NO.	
BRIDGE NO.	

DATE	DESCRIPTION

IF A SEAL IS PRESENT ON THIS SHEET IT HAS BEEN ELECTRONICALLY SEALED AND DATED.

MISSOURI HIGHWAYS AND TRANSPORTATION COMMISSION
105 WEST CAPITOL
JEFFERSON CITY, MO 65102
1-888-ASK-MODOT (1-888-275-6636)

TRAFFIC CONTROL
I-55 DETOUR PLAN
STAGE 1A & 1B SB

SHEET 4 OF 76

NOTE:
TEMPORARY TRAFFIC CONTROL SHOWN ON COMBINATION PROJECT J6I3110 WILL BE PAID FOR ON THIS PROJECT. J6I3110 TEMPORARY TRAFFIC CONTROL IS FOR INFORMATIONAL USE ONLY.

SHOWN TEMP. TRAFFIC CONTROL SIGNS AND DEVICES TO BE RELOCATED FROM PRIOR STAGE AT NO DIRECT PAY

LEGEND

	BRIDGE REHABILITATION WORK
4" TSW	TEMPORARY SOLID WHITE TAPE
4" TIW	TEMPORARY INTERMITTENT WHITE TAPE
4" TSY	TEMPORARY SOLID YELLOW TAPE

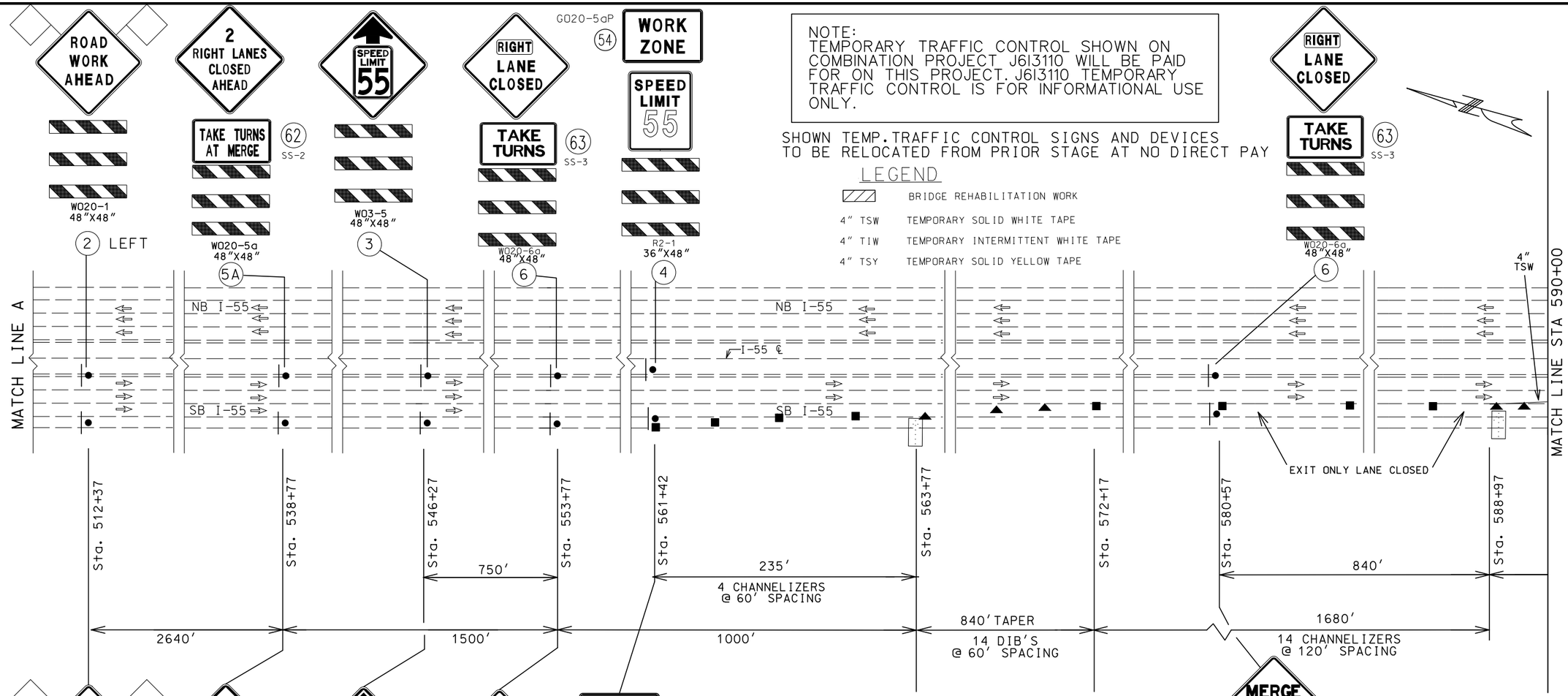

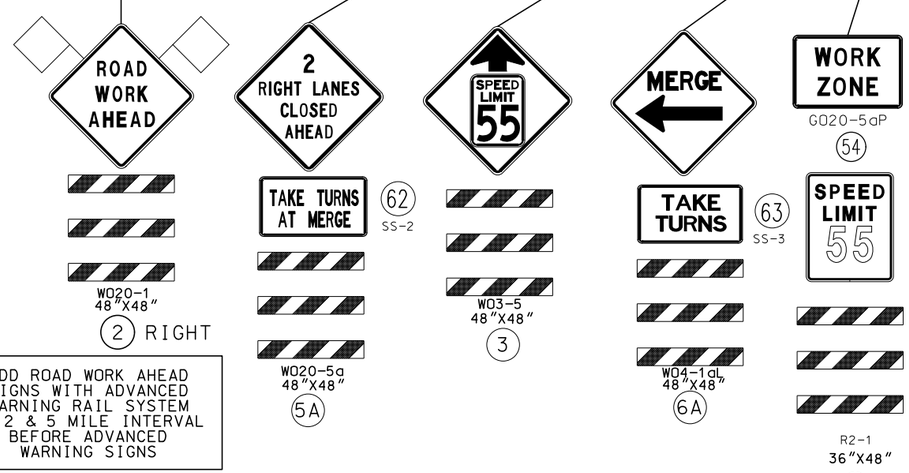

ADD ROAD WORK AHEAD SIGNS WITH ADVANCED WARNING RAIL SYSTEM AT 2 & 5 MILE INTERVAL BEFORE ADVANCED WARNING SIGNS

NOTE:
SEE TCP SHEET 74 OF 76 FOR DYNAMIC ZIPPER MERGE SYSTEM DETAILS AND SIGNING.

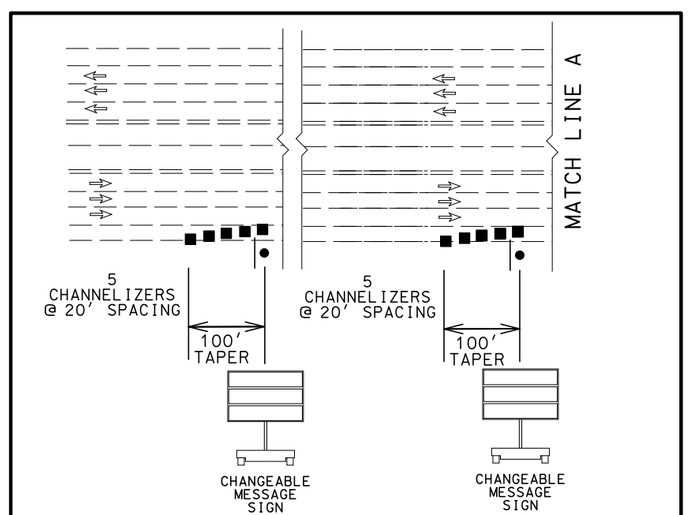

CMS LOCATED BEYOND THE MAXIMUM QUEUE LENGTH.

CMS LOCATED BEYOND THE ESTIMATED QUEUE LENGTH AT THE TIME WHEN SYSTEM ACTIVATION WILL OCCUR.

DISCLAIMER
THE PROFESSIONAL WHOSE SIGNATURE AND PERSONAL SEAL APPEAR HEREON ASSUMES RESPONSIBILITY ONLY FOR WHAT APPEARS ON THIS PAGE, AND DISCLAIMS (PURSUANT TO SECTION 327.411 RSMO) SPECIFICATION, ESTIMATES, REPORTS, OR OTHER DOCUMENTS OR INSTRUMENTS NOT SEALED BY THE UNDERSIGNED PROFESSIONAL RELATING TO OR INTENDED TO BE USED FOR ANY PART OR PARTS OF THE PROJECT TO WHICH THIS PAGE REFERS.

TRAFFIC CONTROL LEGEND

- SIGN (SINGLE SIDED)
- CHANNELIZER (TRIM-LINE)
- DIRECTION INDICATOR BARRICADE
- TEMPORARY TRAFFIC BARRIER
- CHANGEABLE MESSAGE SIGN
- IMPACT ATTENUATOR
- TYPE III MOVABLE BARRICADE

NOT TO SCALE

STATE OF MISSOURI
SHIRLEY J. NORRIS
NUMBER PE-28779
PROFESSIONAL ENGINEER
THIS SHEET HAS BEEN SIGNED, SEALED AND DATED ELECTRONICALLY.

DATE PREPARED	9/29/2016
ROUTE	I-55
STATE	MO
DISTRICT	SL
SHEET NO.	10
COUNTY	JEFFERSON
JOB NO.	J6I3131
CONTRACT ID.	
PROJECT NO.	
BRIDGE NO.	

DATE | DESCRIPTION

IF A SEAL IS PRESENT ON THIS SHEET IT HAS BEEN ELECTRONICALLY SEALED AND DATED.

MISSOURI HIGHWAYS AND TRANSPORTATION COMMISSION
105 WEST CAPITOL
JEFFERSON CITY, MO 65102
1-888-ASK-MODOT (1-888-275-6636)

TRAFFIC CONTROL
STAGE 1B SB

SHEET 5 OF 76

TRAFFIC CONTROL LEGEND

- SIGN (SINGLE SIDED)
- CHANNELIZER (TRIM-LINE)
- DIRECTION INDICATOR BARRICADE
- TEMPORARY TRAFFIC BARRIER (TTB)
- CHANGEABLE MESSAGE SIGN
- IMPACT ATTENUATOR
- TYPE III MOVABLE BARRICADE

LEGEND

4" TSW	TEMPORARY SOLID WHITE TAPE
4" TIW	TEMPORARY INTERMITTENT WHITE TAPE
4" TSY	TEMPORARY SOLID YELLOW TAPE

NOTE:
TEMPORARY TRAFFIC CONTROL SHOWN ON COMBINATION PROJECT J6I3110 WILL BE PAID FOR ON THIS PROJECT. J6I3110 TEMPORARY TRAFFIC CONTROL IS FOR INFORMATIONAL USE ONLY.

SHOWN TEMP. TRAFFIC CONTROL SIGNS AND DEVICES TO BE RELOCATED FROM PRIOR STAGE AT NO DIRECT PAY

DISCLAIMER
THE PROFESSIONAL WHOSE SIGNATURE AND PERSONAL SEAL APPEAR HEREON ASSUMES RESPONSIBILITY ONLY FOR WHAT APPEARS ON THIS PAGE, AND DISCLAIMS (PURSUANT TO SECTION 327.411 RSMO) SPECIFICATION, ESTIMATES, REPORTS, OR OTHER DOCUMENTS OR INSTRUMENTS NOT SEALED BY THE UNDERSIGNED PROFESSIONAL RELATING TO OR INTENDED TO BE USED FOR ANY PART OR PARTS OF THE PROJECT TO WHICH THIS PAGE REFERS.

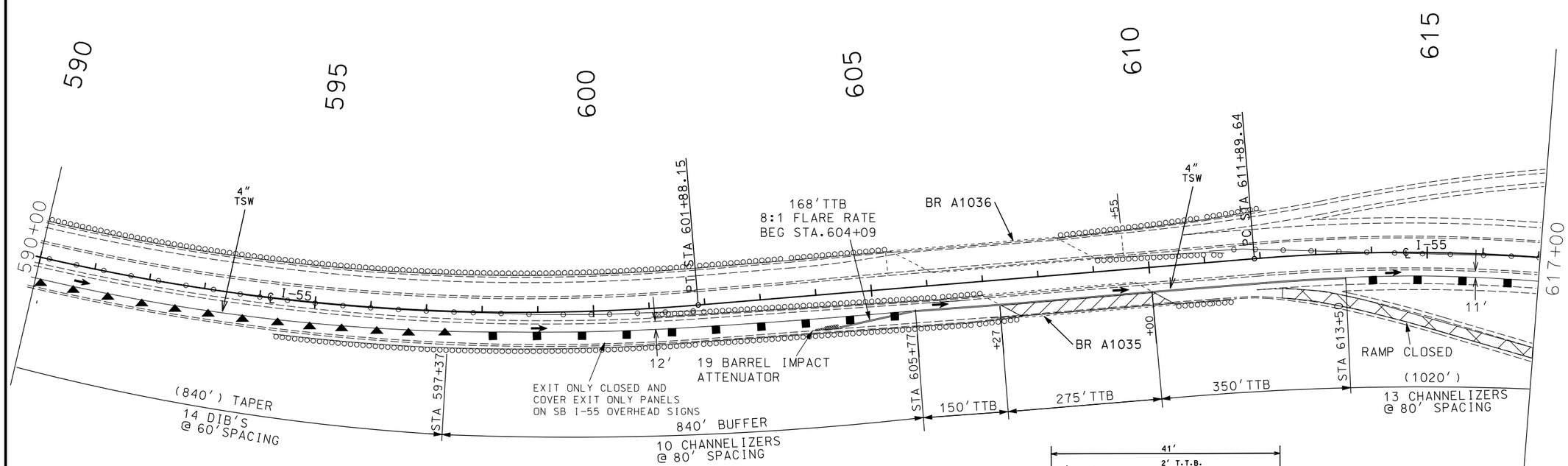

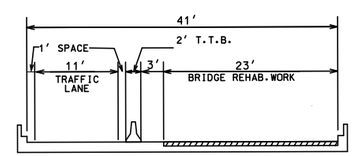

TYPICAL AT BRIDGE A1035 (SB I-55) REHABILITATION
STA 607+27 TO 610+00 (I-55 ℄)

(IN DIRECTION OF INCREASING STATIONING)

STAGE 1B SB

WILL HAVE 1680' TWO LANE FROM 573+20 TO 590+00 USE 840' TAPER FROM 564+80 TO 573+20 TO TAKE 3RD LANE TO 2 LANES.

THE EXISTENCE AND APPROXIMATE LOCATION OF UTILITY FACILITIES KNOWN TO EXIST, AS SHOWN ON THE PLANS, ARE BASED ON THE BEST INFORMATION AVAILABLE TO THE COMMISSION AT THIS TIME. THIS INFORMATION IS PROVIDED BY THE COMMISSION "AS-IS" AND THE COMMISSION EXPRESSLY DISCLAIMS ANY REPRESENTATION OR WARRANTY AS TO THE COMPLETENESS, ACCURACY, OR SUITABILITY OF THE INFORMATION FOR ANY USE. RELIANCE UPON THIS INFORMATION IS DONE AT THE RISK AND PERIL OF THE USER, AND THE COMMISSION SHALL NOT BE LIABLE FOR ANY DAMAGES THAT MAY ARISE FROM ANY ERROR IN THE INFORMATION.

BRIDGE REHABILITATION WORK

SCALE
0 100 200 300 400 500

STATE OF MISSOURI
SHIRLEY J. NORRIS
NUMBER PE-28779
PROFESSIONAL ENGINEER
THIS SHEET HAS BEEN SIGNED, SEALED AND DATED ELECTRONICALLY.

DATE PREPARED	
9/29/2016	
ROUTE	STATE
I-55	MO
DISTRICT	SHEET NO.
SL	11
COUNTY	
JEFFERSON	
JOB NO.	
J6I3131	
CONTRACT ID.	
PROJECT NO.	
BRIDGE NO.	

DESCRIPTION	DATE

IF A SEAL IS PRESENT ON THIS SHEET IT HAS BEEN ELECTRONICALLY SEALED AND DATED.

MISSOURI HIGHWAYS AND TRANSPORTATION COMMISSION
105 WEST CAPITOL
JEFFERSON CITY, MO 65102
1-888-ASK-MODOT (1-888-275-6636)

TRAFFIC CONTROL
STAGE 1B SB

SHEET 6 OF 76

TRAFFIC CONTROL LEGEND

- SIGN (SINGLE SIDED)
- CHANNELIZER (TRIM-LINE)
- DIRECTION INDICATOR BARRICADE
- TEMPORARY TRAFFIC BARRIER (TTB)
- CHANGEABLE MESSAGE SIGN
- IMPACT ATTENUATOR
- TYPE III MOVABLE BARRICADE

NOTE:
TEMPORARY TRAFFIC CONTROL SHOWN ON COMBINATION PROJECT J6I3110 WILL BE PAID FOR ON THIS PROJECT. J6I3110 TEMPORARY TRAFFIC CONTROL IS FOR INFORMATIONAL USE ONLY.

SHOWN TEMP. TRAFFIC CONTROL SIGNS AND DEVICES TO BE RELOCATED FROM PRIOR STAGE AT NO DIRECT PAY

DISCLAIMER
THE PROFESSIONAL WHOSE SIGNATURE AND PERSONAL SEAL APPEAR HEREON ASSUMES RESPONSIBILITY ONLY FOR WHAT APPEARS ON THIS PAGE, AND DISCLAIMS (PURSUANT TO SECTION 327.411 RSMO) SPECIFICATION, ESTIMATES, REPORTS, OR OTHER DOCUMENTS OR INSTRUMENTS NOT SEALED BY THE UNDERSIGNED PROFESSIONAL RELATING TO OR INTENDED TO BE USED FOR ANY PART OR PARTS OF THE PROJECT TO WHICH THIS PAGE REFERS.

LEGEND

4" TSW	TEMPORARY SOLID WHITE TAPE
4" TIW	TEMPORARY INTERMITTENT WHITE TAPE
4" TSY	TEMPORARY SOLID YELLOW TAPE

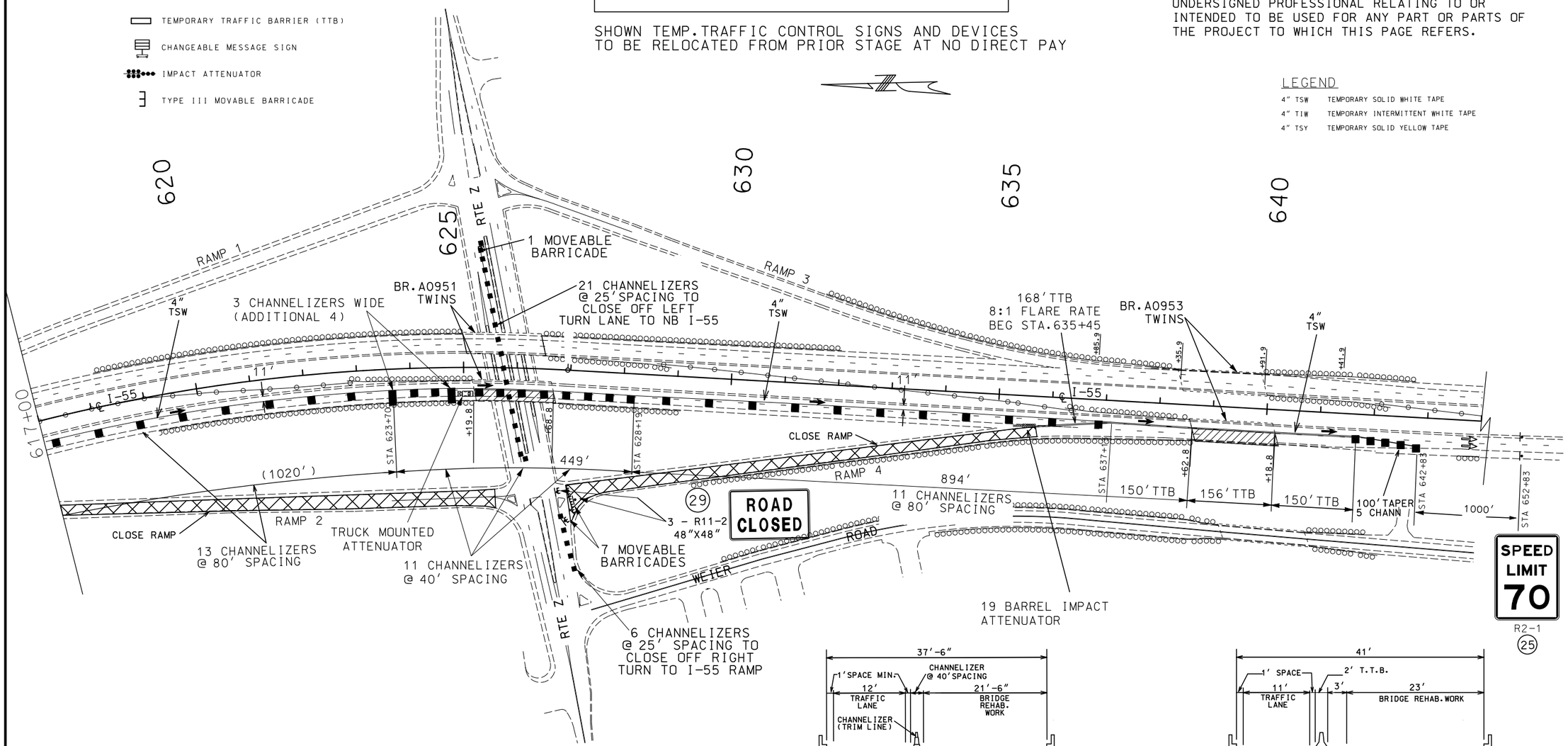

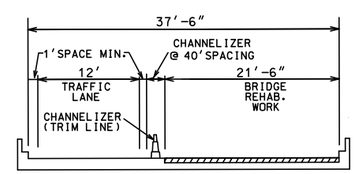

TYPICAL AT BRIDGE A951 (SB I-55) REHABILITATION
STA 625+19.8 TO 626+68.8 (I-55 ℄)

(IN DIRECTION OF INCREASING STATIONING)

STAGE 1B SB

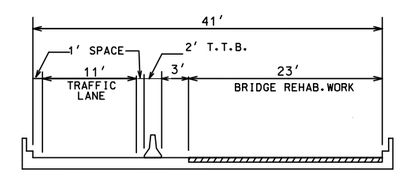

TYPICAL AT BRIDGE A953 (SB I-55) REHABILITATION
STA 638+62.8 TO 640+18.8 (I-55 ℄)

(IN DIRECTION OF INCREASING STATIONING)

STAGE 1B SB

BRIDGE REHABILITATION WORK

SCALE
0 100 200 300 400 500

STATE OF MISSOURI
SHIRLEY J. NORRIS
NUMBER PE-28779
PROFESSIONAL ENGINEER
THIS SHEET HAS BEEN SIGNED, SEALED AND DATED ELECTRONICALLY.

DATE PREPARED	9/29/2016
ROUTE	I-55
STATE	MO
DISTRICT	SL
SHEET NO.	12
COUNTY	JEFFERSON
JOB NO.	J6I3131
CONTRACT ID.	
PROJECT NO.	
BRIDGE NO.	

DESCRIPTION
DATE

IF A SEAL IS PRESENT ON THIS SHEET IT HAS BEEN ELECTRONICALLY SEALED AND DATED.

MISSOURI HIGHWAYS AND TRANSPORTATION COMMISSION
105 WEST CAPITOL
JEFFERSON CITY, MO 65102
1-888-ASK-MODOT (1-888-275-6636)

TRAFFIC CONTROL
STAGE 1B SB

SHEET 7 OF 76

DETOUR FOR SOUTHBOUND I-55 @ ROUTE Z EXIT-RAMP AND ON-RAMP CLOSURES DURING STAGE 1A & 1B CONSTRUCTION

DISCLAIMER
THE PROFESSIONAL WHOSE SIGNATURE AND PERSONAL SEAL APPEAR HEREON ASSUMES RESPONSIBILITY ONLY FOR WHAT APPEARS ON THIS PAGE, AND DISCLAIMS (PURSUANT TO SECTION 327.411 RSMO) SPECIFICATION, ESTIMATES, REPORTS, OR OTHER DOCUMENTS OR INSTRUMENTS NOT SEALED BY THE UNDERSIGNED PROFESSIONAL RELATING TO OR INTENDED TO BE USED FOR ANY PART OR PARTS OF THE PROJECT TO WHICH THIS PAGE REFERS.

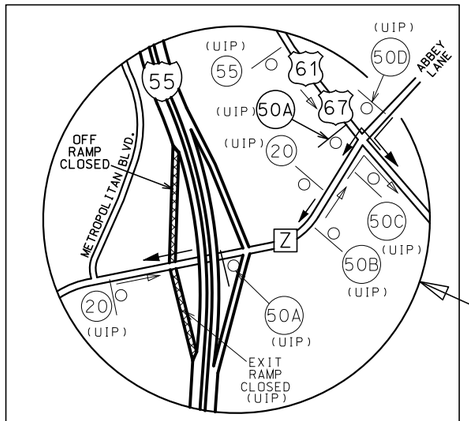

DETAIL OF ROAD CLOSURE

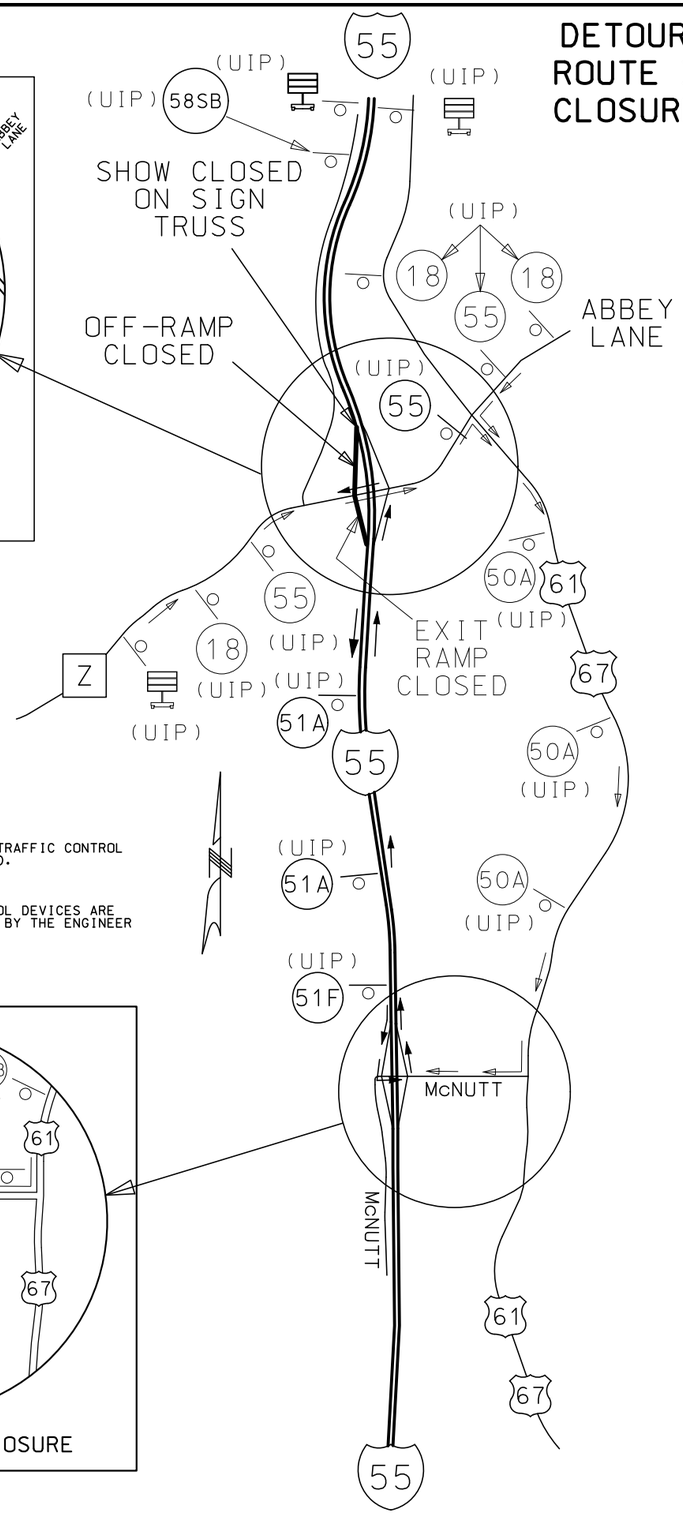

TRAFFIC CONTROL LEGEND

- SIGN (SINGLE SIDED)
- CHANGEABLE MESSAGE BOARD (WITH 5 CHANNELIZERS)

GENERAL NOTES:

1. ANY EXISTING SIGNS THAT CONFLICT WITH THE TRAFFIC CONTROL PLAN SHALL BE COMPLETELY COVERED OR REMOVED.
2. ALL SIGNS SHALL BE GROUND-MOUNTED.
3. ALL DISTANCES AND SPACING OF TRAFFIC CONTROL DEVICES ARE APPROXIMATE AND MAY BE REVISED AS DIRECTED BY THE ENGINEER TO FIT FIELD CONDITIONS.

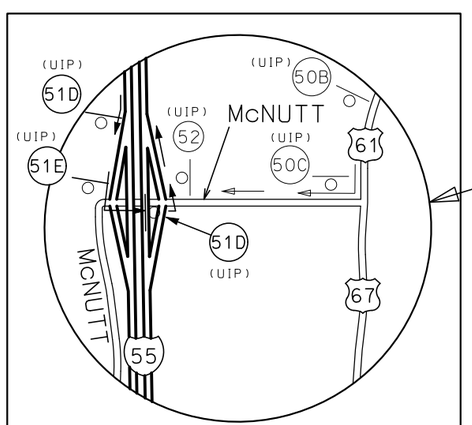

DETAIL OF ROAD CLOSURE

WO20-2
48"X48"
(18)

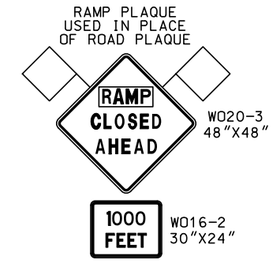

RAMP PLAQUE USED IN PLACE OF ROAD PLAQUE
WO20-3
48"X48"
WO16-2
30"X24"
(20)

MO4-8a
24"X18"
(52)

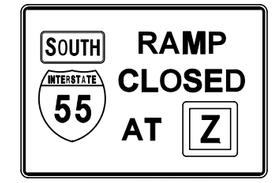

SPECIAL SIGN
72"X48"
(55)
(SEE SIGN DETAIL SHEET)

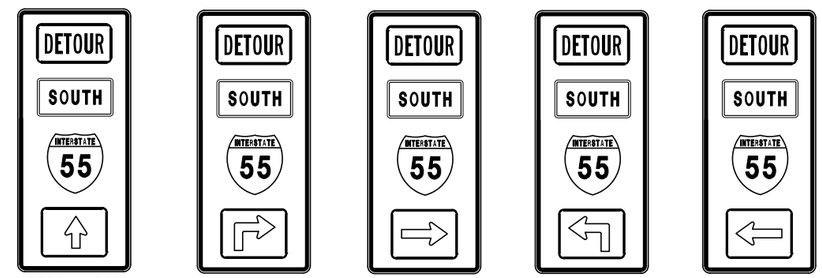

SPECIAL SIGN 36"X78" (50A) (SEE SIGN DETAIL SHEET)
SPECIAL SIGN 36"X78" (50B) (SEE SIGN DETAIL SHEET)
SPECIAL SIGN 36"X78" (50C) (SEE SIGN DETAIL SHEET)
SPECIAL SIGN 36"78" (50D) (SEE SIGN DETAIL SHEET)
SPECIAL SIGN 36"78" (50E) (SEE SIGN DETAIL SHEET)

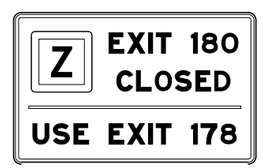

SPECIAL SIGN
96"X60"
(58SB)
(SEE SIGN DETAIL SHEET)

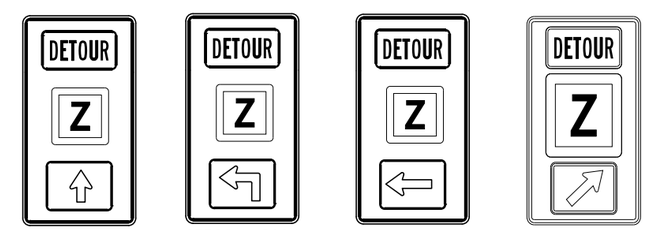

SPECIAL SIGN 36"X60" (51A) (SEE SIGN DETAIL SHEET)
SPECIAL SIGN 36"X60" (51D) (SEE SIGN DETAIL SHEET)
SPECIAL SIGN 36"X60" (51E) (SEE SIGN DETAIL SHEET)
SPECIAL SIGN 36"X60" (51F) (SEE SIGN DETAIL SHEET)

NOT TO SCALE

STATE OF MISSOURI
SHIRLEY J. NORRIS
NUMBER PE-28779
PROFESSIONAL ENGINEER
THIS SHEET HAS BEEN SIGNED, SEALED AND DATED ELECTRONICALLY.

DATE PREPARED	9/29/2016
ROUTE	I-55
STATE	MO
DISTRICT	SL
SHEET NO.	13
COUNTY	JEFFERSON
JOB NO.	J6I3131
CONTRACT ID.	
PROJECT NO.	
BRIDGE NO.	

DESCRIPTION | DATE

IF A SEAL IS PRESENT ON THIS SHEET IT HAS BEEN ELECTRONICALLY SEALED AND DATED.

MISSOURI HIGHWAYS AND TRANSPORTATION COMMISSION
105 WEST CAPITOL
JEFFERSON CITY, MO 65102
1-888-ASK-MODOT (1-888-275-6636)

TRAFFIC CONTROL
I-55 DETOUR PLAN
STAGE 1A & 1B SB
SHEET 8 OF 76

TRAFFIC CONTROL LEGEND

- SIGN (SINGLE SIDED)
- CHANNELIZER (TRIM-LINE)
- DIRECTION INDICATOR BARRICADE
- TEMPORARY TRAFFIC BARRIER
- CHANGEABLE MESSAGE SIGN
- IMPACT ATTENUATOR
- TYPE III MOVABLE BARRICADE

ADD ROAD WORK AHEAD SIGNS WITH ADVANCED WARNING RAIL SYSTEM AT 2 & 5 MILE INTERVAL BEFORE ADVANCED WARNING SIGNS

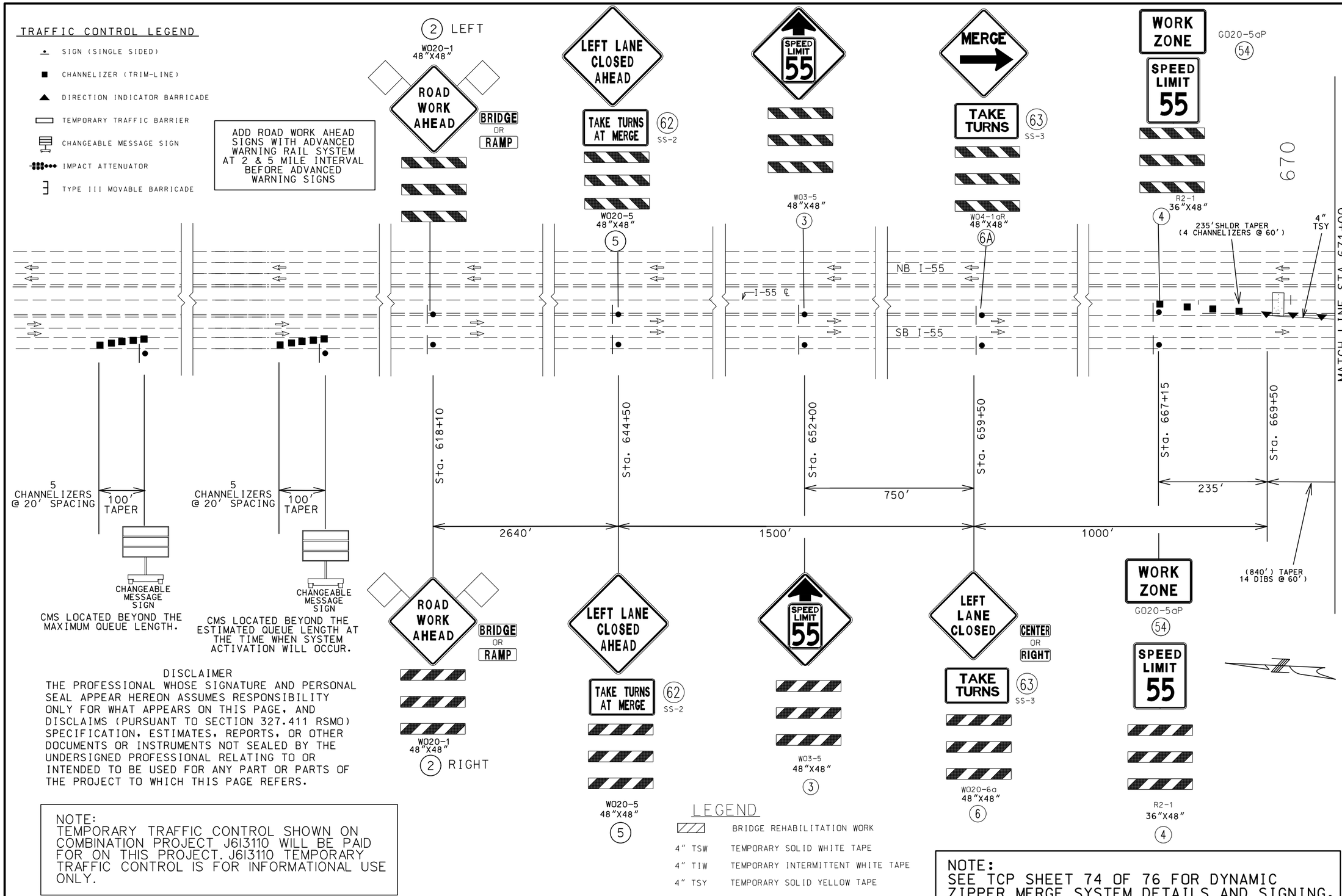

DISCLAIMER

THE PROFESSIONAL WHOSE SIGNATURE AND PERSONAL SEAL APPEAR HEREON ASSUMES RESPONSIBILITY ONLY FOR WHAT APPEARS ON THIS PAGE, AND DISCLAIMS (PURSUANT TO SECTION 327.411 RSMO) SPECIFICATION, ESTIMATES, REPORTS, OR OTHER DOCUMENTS OR INSTRUMENTS NOT SEALED BY THE UNDERSIGNED PROFESSIONAL RELATING TO OR INTENDED TO BE USED FOR ANY PART OR PARTS OF THE PROJECT TO WHICH THIS PAGE REFERS.

NOTE:
TEMPORARY TRAFFIC CONTROL SHOWN ON COMBINATION PROJECT J6I3110 WILL BE PAID FOR ON THIS PROJECT. J6I3110 TEMPORARY TRAFFIC CONTROL IS FOR INFORMATIONAL USE ONLY.

NOT TO SCALE

LEGEND

	BRIDGE REHABILITATION WORK
4" TSW	TEMPORARY SOLID WHITE TAPE
4" TIW	TEMPORARY INTERMITTENT WHITE TAPE
4" TSY	TEMPORARY SOLID YELLOW TAPE

SHOWN TEMP. TRAFFIC CONTROL SIGNS AND DEVICES TO BE RELOCATED FROM PRIOR STAGE AT NO DIRECT PAY

NOTE:
SEE TCP SHEET 74 OF 76 FOR DYNAMIC ZIPPER MERGE SYSTEM DETAILS AND SIGNING.

STATE OF MISSOURI
SHIRLEY J. NORRIS
NUMBER PE-28779
PROFESSIONAL ENGINEER

THIS SHEET HAS BEEN SIGNED, SEALED AND DATED ELECTRONICALLY.

DATE PREPARED	9/29/2016
ROUTE	I-55
STATE	MO
DISTRICT	SL
SHEET NO.	14
COUNTY	JEFFERSON
JOB NO.	J6I3131
CONTRACT ID.	
PROJECT NO.	
BRIDGE NO.	

DESCRIPTION

DATE

MISSOURI HIGHWAYS AND TRANSPORTATION COMMISSION

105 WEST CAPITOL
JEFFERSON CITY, MO 65102
1-888-ASK-MODOT (1-888-275-6636)

IF A SEAL IS PRESENT ON THIS SHEET IT HAS BEEN ELECTRONICALLY SEALED AND DATED.

TRAFFIC CONTROL
STAGE 2A SB

SHEET 9 OF 76

TRAFFIC CONTROL LEGEND

- SIGN (SINGLE SIDED)
- CHANNELIZER (TRIM-LINE)
- DIRECTION INDICATOR BARRICADE
- TEMPORARY TRAFFIC BARRIER (TTB)
- CHANGEABLE MESSAGE SIGN
- IMPACT ATTENUATOR
- TYPE III MOVABLE BARRICADE

LEGEND

4" TSW	TEMPORARY SOLID WHITE TAPE
4" TIW	TEMPORARY INTERMITTENT WHITE TAPE
4" TSY	TEMPORARY SOLID YELLOW TAPE

SHOWN TEMP. TRAFFIC CONTROL SIGNS AND DEVICES TO BE RELOCATED FROM PRIOR STAGE AT NO DIRECT PAY

DISCLAIMER
THE PROFESSIONAL WHOSE SIGNATURE AND PERSONAL SEAL APPEAR HEREON ASSUMES RESPONSIBILITY ONLY FOR WHAT APPEARS ON THIS PAGE, AND DISCLAIMS (PURSUANT TO SECTION 327.411 RSMO) SPECIFICATION, ESTIMATES, REPORTS, OR OTHER DOCUMENTS OR INSTRUMENTS NOT SEALED BY THE UNDERSIGNED PROFESSIONAL RELATING TO OR INTENDED TO BE USED FOR ANY PART OR PARTS OF THE PROJECT TO WHICH THIS PAGE REFERS.

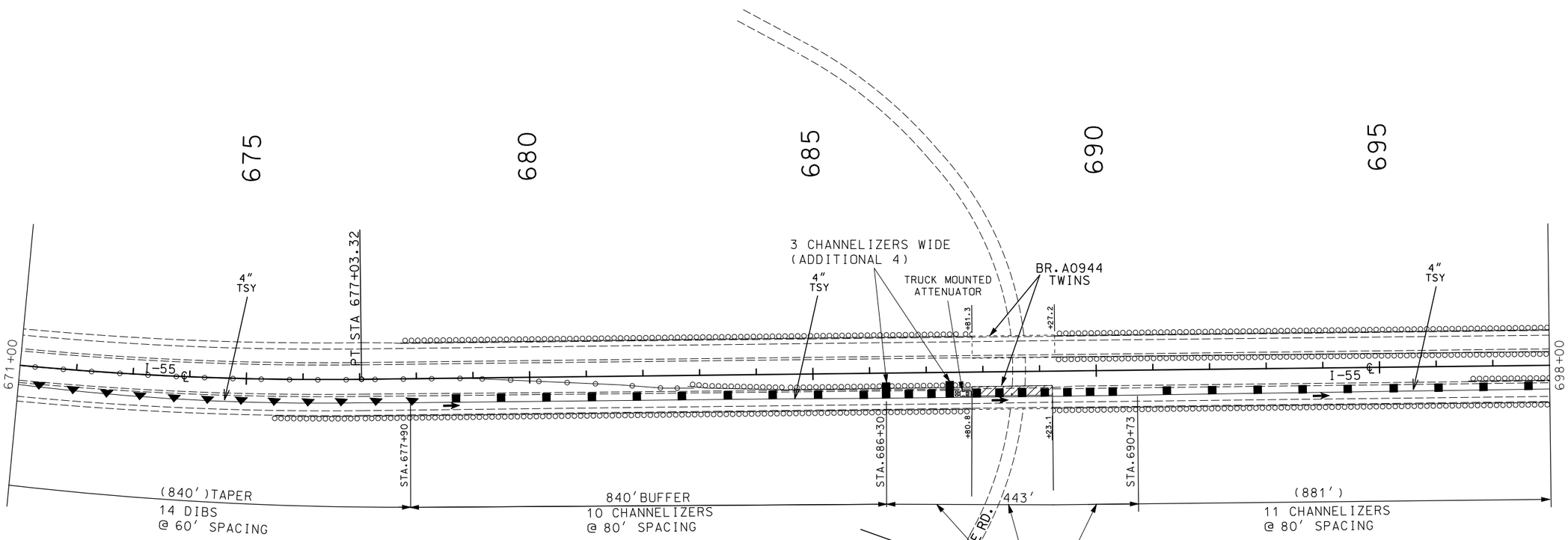

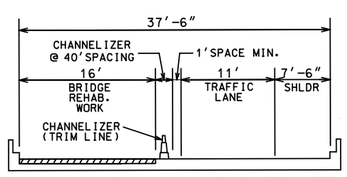

TYPICAL AT BRIDGE A944 (SB I-55) REHABILITATION
STA 687+80.8 TO 689+23.1 (I-55 ℄)

(IN DIRECTION OF INCREASING STATIONING)

STAGE 2A SB

NOTE:
TEMPORARY TRAFFIC CONTROL SHOWN ON COMBINATION PROJECT J6I3110 WILL BE PAID FOR ON THIS PROJECT. J6I3110 TEMPORARY TRAFFIC CONTROL IS FOR INFORMATIONAL USE ONLY.

BRIDGE REHABILITATION WORK

SHOWN TEMP. TRAFFIC CONTROL SIGNS AND DEVICES TO BE RELOCATED FROM PRIOR STAGE AT NO DIRECT PAY

SCALE
0 100 200 300 400 500

STATE OF MISSOURI
SHIRLEY J. NORRIS
NUMBER PE-28779
PROFESSIONAL ENGINEER
THIS SHEET HAS BEEN SIGNED, SEALED AND DATED ELECTRONICALLY.

DATE PREPARED	9/29/2016
ROUTE	I-55
STATE	MO
DISTRICT	SL
SHEET NO.	15
COUNTY	JEFFERSON
JOB NO.	J6I3131
CONTRACT ID.	
PROJECT NO.	
BRIDGE NO.	

DESCRIPTION	DATE

IF A SEAL IS PRESENT ON THIS SHEET IT HAS BEEN ELECTRONICALLY SEALED AND DATED.

MISSOURI HIGHWAYS AND TRANSPORTATION COMMISSION
105 WEST CAPITOL
JEFFERSON CITY, MO 65102
1-888-ASK-MODOT (1-888-275-6636)

TRAFFIC CONTROL
STAGE 2A SB

SHEET 10 OF 76

TRAFFIC CONTROL LEGEND

- SIGN (SINGLE SIDED)
- CHANNELIZER (TRIM-LINE)
- DIRECTION INDICATOR BARRICADE
- TEMPORARY TRAFFIC BARRIER (TTB)
- CHANGEABLE MESSAGE SIGN
- IMPACT ATTENUATOR
- TYPE III MOVABLE BARRICADE

LEGEND

4" TSW	TEMPORARY SOLID WHITE TAPE
4" TIW	TEMPORARY INTERMITTENT WHITE TAPE
4" TSY	TEMPORARY SOLID YELLOW TAPE

SHOWN TEMP. TRAFFIC CONTROL SIGNS AND DEVICES TO BE RELOCATED FROM PRIOR STAGE AT NO DIRECT PAY

DISCLAIMER
THE PROFESSIONAL WHOSE SIGNATURE AND PERSONAL SEAL APPEAR HEREON ASSUMES RESPONSIBILITY ONLY FOR WHAT APPEARS ON THIS PAGE, AND DISCLAIMS (PURSUANT TO SECTION 327.411 RSMO) SPECIFICATION, ESTIMATES, REPORTS, OR OTHER DOCUMENTS OR INSTRUMENTS NOT SEALED BY THE UNDERSIGNED PROFESSIONAL RELATING TO OR INTENDED TO BE USED FOR ANY PART OR PARTS OF THE PROJECT TO WHICH THIS PAGE REFERS.

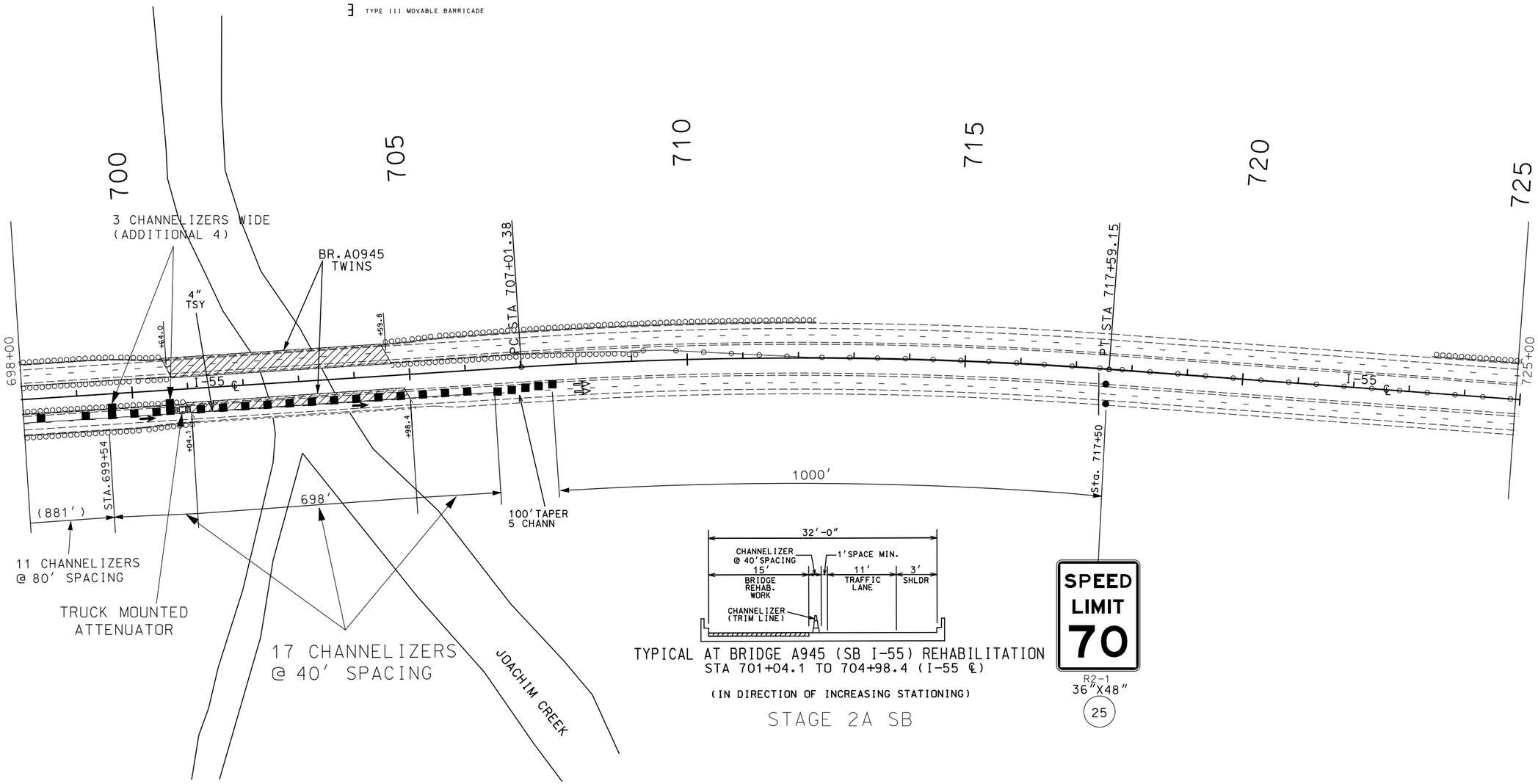

TYPICAL AT BRIDGE A945 (SB I-55) REHABILITATION
STA 701+04.1 TO 704+98.4 (I-55 ℄)

(IN DIRECTION OF INCREASING STATIONING)

STAGE 2A SB

NOTE:
TEMPORARY TRAFFIC CONTROL SHOWN ON COMBINATION PROJECT J6I3110 WILL BE PAID FOR ON THIS PROJECT. J6I3110 TEMPORARY TRAFFIC CONTROL IS FOR INFORMATIONAL USE ONLY.

BRIDGE REHABILITATION WORK

SCALE
0 100 200 300 400 500

STATE OF MISSOURI
SHIRLEY J. NORRIS
NUMBER PE-28779
PROFESSIONAL ENGINEER
THIS SHEET HAS BEEN SIGNED, SEALED AND DATED ELECTRONICALLY.

IF A SEAL IS PRESENT ON THIS SHEET IT HAS BEEN ELECTRONICALLY SEALED AND DATED.

DATE PREPARED	9/29/2016
ROUTE	I-55
STATE	MO
DISTRICT	SL
SHEET NO.	16
COUNTY	JEFFERSON
JOB NO.	J6I3131
CONTRACT ID.	
PROJECT NO.	
BRIDGE NO.	

DESCRIPTION

DATE

MISSOURI HIGHWAYS AND TRANSPORTATION COMMISSION
105 WEST CAPITOL
JEFFERSON CITY, MO 65102
1-888-ASK-MODOT (1-888-275-6636)

TRAFFIC CONTROL
STAGE 2A SB

SHEET 11 OF 76

TRAFFIC CONTROL LEGEND

- SIGN (SINGLE SIDED)
- CHANNELIZER (TRIM-LINE)
- DIRECTION INDICATOR BARRICADE
- TEMPORARY TRAFFIC BARRIER
- CHANGEABLE MESSAGE SIGN
- IMPACT ATTENUATOR
- TYPE III MOVABLE BARRICADE

ADD ROAD WORK AHEAD SIGNS WITH ADVANCED WARNING RAIL SYSTEM AT 2 & 5 MILE INTERVAL BEFORE ADVANCED WARNING SIGNS

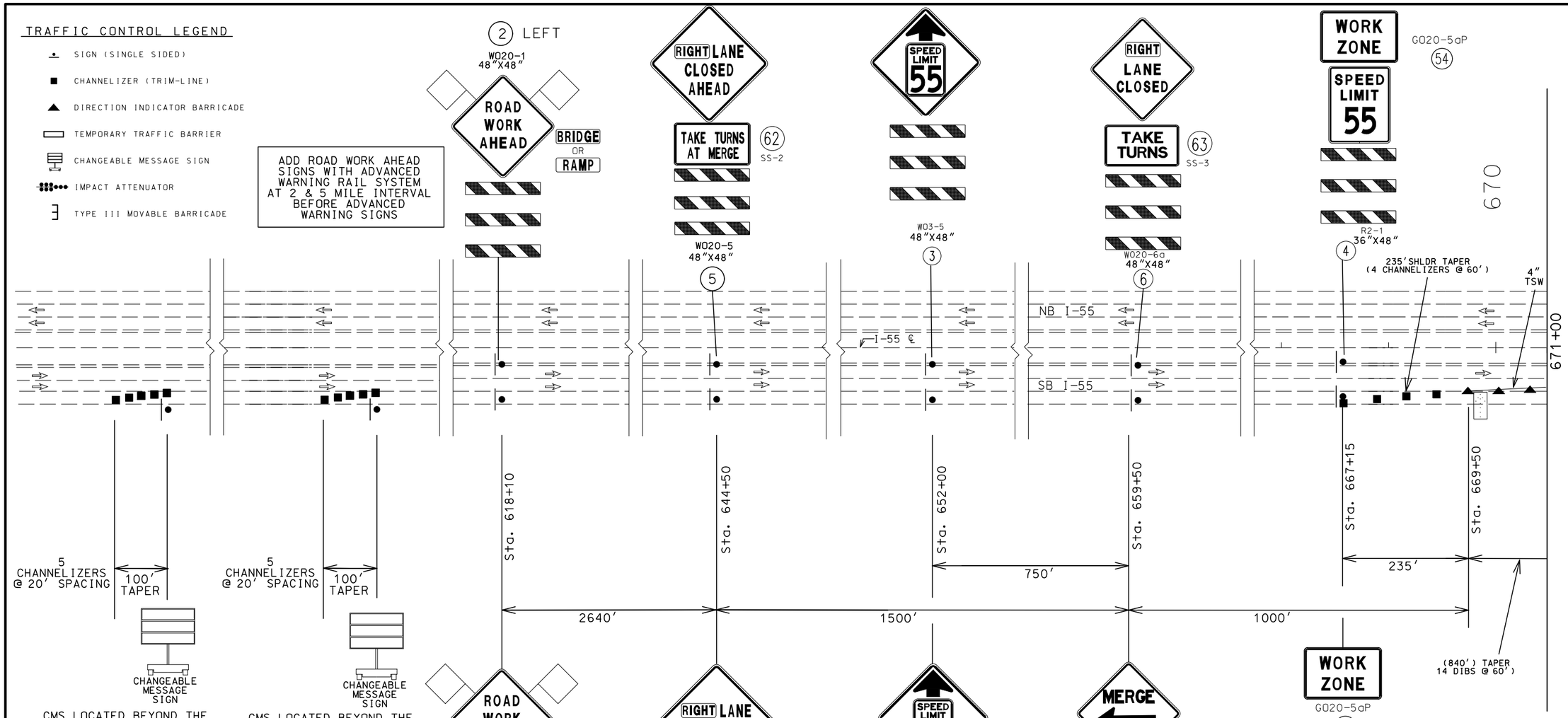

DISCLAIMER

THE PROFESSIONAL WHOSE SIGNATURE AND PERSONAL SEAL APPEAR HEREON ASSUMES RESPONSIBILITY ONLY FOR WHAT APPEARS ON THIS PAGE, AND DISCLAIMS (PURSUANT TO SECTION 327.411 RSMO) SPECIFICATION, ESTIMATES, REPORTS, OR OTHER DOCUMENTS OR INSTRUMENTS NOT SEALED BY THE UNDERSIGNED PROFESSIONAL RELATING TO OR INTENDED TO BE USED FOR ANY PART OR PARTS OF THE PROJECT TO WHICH THIS PAGE REFERS.

NOTE:
TEMPORARY TRAFFIC CONTROL SHOWN ON COMBINATION PROJECT J6I3110 WILL BE PAID FOR ON THIS PROJECT. J6I3110 TEMPORARY TRAFFIC CONTROL IS FOR INFORMATIONAL USE ONLY.

NOT TO SCALE

LEGEND

▨	BRIDGE REHABILITATION WORK
4" TSW	TEMPORARY SOLID WHITE TAPE
4" TIW	TEMPORARY INTERMITTENT WHITE TAPE
4" TSY	TEMPORARY SOLID YELLOW TAPE

SHOWN TEMP. TRAFFIC CONTROL SIGNS AND DEVICES TO BE RELOCATED FROM PRIOR STAGE AT NO DIRECT PAY

NOTE:
SEE TCP SHEET 74 OF 76 FOR DYNAMIC ZIPPER MERGE SYSTEM DETAILS AND SIGNING.

STATE OF MISSOURI
SHIRLEY J. NORRIS
NUMBER PE-28779
PROFESSIONAL ENGINEER

THIS SHEET HAS BEEN SIGNED, SEALED AND DATED ELECTRONICALLY.

DATE PREPARED	9/29/2016
ROUTE	I-55
STATE	MO
DISTRICT	SL
SHEET NO.	17
COUNTY	JEFFERSON
JOB NO.	J6I3131
CONTRACT ID.	
PROJECT NO.	
BRIDGE NO.	

DESCRIPTION

DATE

IF A SEAL IS PRESENT ON THIS SHEET IT HAS BEEN ELECTRONICALLY SEALED AND DATED.

MISSOURI HIGHWAYS AND TRANSPORTATION COMMISSION
105 WEST CAPITOL
JEFFERSON CITY, MO 65102
1-888-ASK-MODOT (1-888-275-6636)

TRAFFIC CONTROL
STAGE 2B SB

SHEET 12 OF 76

TRAFFIC CONTROL LEGEND

- SIGN (SINGLE SIDED)
- CHANNELIZER (TRIM-LINE)
- DIRECTION INDICATOR BARRICADE
- TEMPORARY TRAFFIC BARRIER (TTB)
- CHANGEABLE MESSAGE SIGN
- IMPACT ATTENUATOR
- TYPE III MOVABLE BARRICADE

LEGEND

4" TSW	TEMPORARY SOLID WHITE TAPE
4" TIW	TEMPORARY INTERMITTENT WHITE TAPE
4" TSY	TEMPORARY SOLID YELLOW TAPE

SHOWN TEMP. TRAFFIC CONTROL SIGNS AND DEVICES TO BE RELOCATED FROM PRIOR STAGE AT NO DIRECT PAY

DISCLAIMER
THE PROFESSIONAL WHOSE SIGNATURE AND PERSONAL SEAL APPEAR HEREON ASSUMES RESPONSIBILITY ONLY FOR WHAT APPEARS ON THIS PAGE, AND DISCLAIMS (PURSUANT TO SECTION 327.411 RSMO) SPECIFICATION, ESTIMATES, REPORTS, OR OTHER DOCUMENTS OR INSTRUMENTS NOT SEALED BY THE UNDERSIGNED PROFESSIONAL RELATING TO OR INTENDED TO BE USED FOR ANY PART OR PARTS OF THE PROJECT TO WHICH THIS PAGE REFERS.

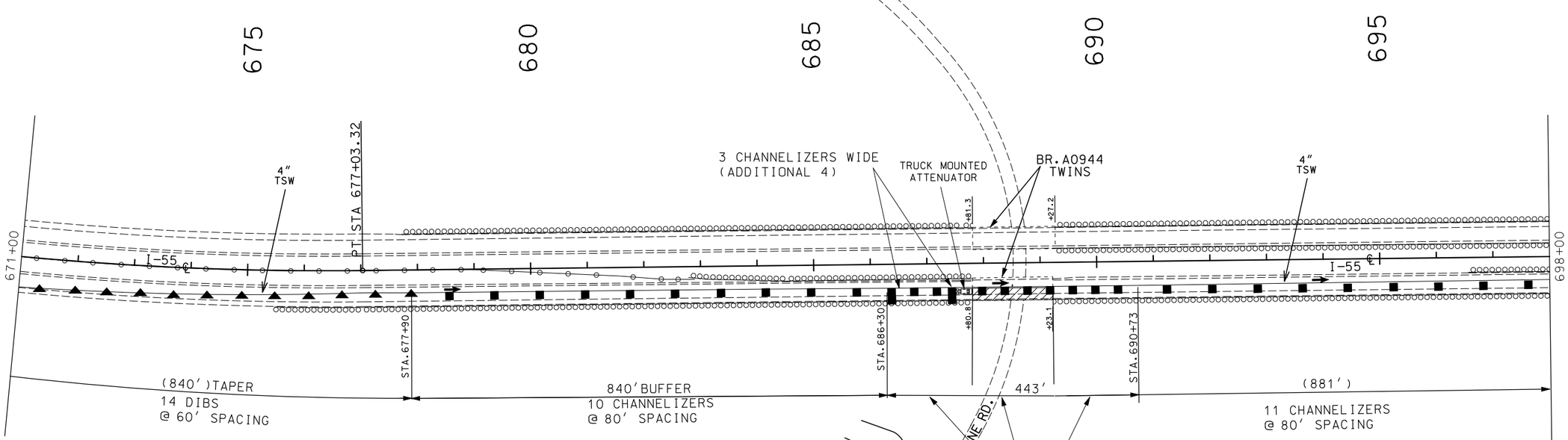

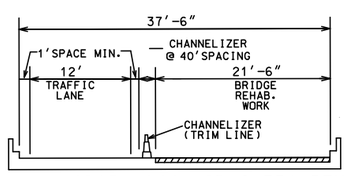

TYPICAL AT BRIDGE A944 (SB I-55) REHABILITATION
STA 687+80.8 TO 689+23.1 (I-55 ℄)

(IN DIRECTION OF INCREASING STATIONING)

STAGE 2B SB

NOTE:
TEMPORARY TRAFFIC CONTROL SHOWN ON COMBINATION PROJECT J6I3110 WILL BE PAID FOR ON THIS PROJECT. J6I3110 TEMPORARY TRAFFIC CONTROL IS FOR INFORMATIONAL USE ONLY.

BRIDGE REHABILITATION WORK

SCALE
0 100 200 300 400 500

STATE OF MISSOURI
SHIRLEY J. NORRIS
NUMBER PE-28779
PROFESSIONAL ENGINEER

THIS SHEET HAS BEEN SIGNED, SEALED AND DATED ELECTRONICALLY.

DATE PREPARED	
9/29/2016	
ROUTE	STATE
I-55	MO
DISTRICT	SHEET NO.
SL	18
COUNTY	
JEFFERSON	
JOB NO.	
J6I3131	
CONTRACT ID.	
PROJECT NO.	
BRIDGE NO.	

DESCRIPTION	DATE

IF A SEAL IS PRESENT ON THIS SHEET IT HAS BEEN ELECTRONICALLY SEALED AND DATED.

MISSOURI HIGHWAYS AND TRANSPORTATION COMMISSION
105 WEST CAPITOL
JEFFERSON CITY, MO 65102
1-888-ASK-MODOT (1-888-275-6636)

TRAFFIC CONTROL
STAGE 2B SB

SHEET 13 OF 76

TRAFFIC CONTROL LEGEND

- SIGN (SINGLE SIDED)
- CHANNELIZER (TRIM-LINE)
- DIRECTION INDICATOR BARRICADE
- TEMPORARY TRAFFIC BARRIER (TTB)
- CHANGEABLE MESSAGE SIGN
- IMPACT ATTENUATOR
- TYPE III MOVABLE BARRICADE

LEGEND

4" TSW	TEMPORARY SOLID WHITE TAPE
4" TIW	TEMPORARY INTERMITTENT WHITE TAPE
4" TSY	TEMPORARY SOLID YELLOW TAPE

SHOWN TEMP. TRAFFIC CONTROL SIGNS AND DEVICES TO BE RELOCATED FROM PRIOR STAGE AT NO DIRECT PAY

DISCLAIMER

THE PROFESSIONAL WHOSE SIGNATURE AND PERSONAL SEAL APPEAR HEREON ASSUMES RESPONSIBILITY ONLY FOR WHAT APPEARS ON THIS PAGE, AND DISCLAIMS (PURSUANT TO SECTION 327.411 RSMO) SPECIFICATION, ESTIMATES, REPORTS, OR OTHER DOCUMENTS OR INSTRUMENTS NOT SEALED BY THE UNDERSIGNED PROFESSIONAL RELATING TO OR INTENDED TO BE USED FOR ANY PART OR PARTS OF THE PROJECT TO WHICH THIS PAGE REFERS.

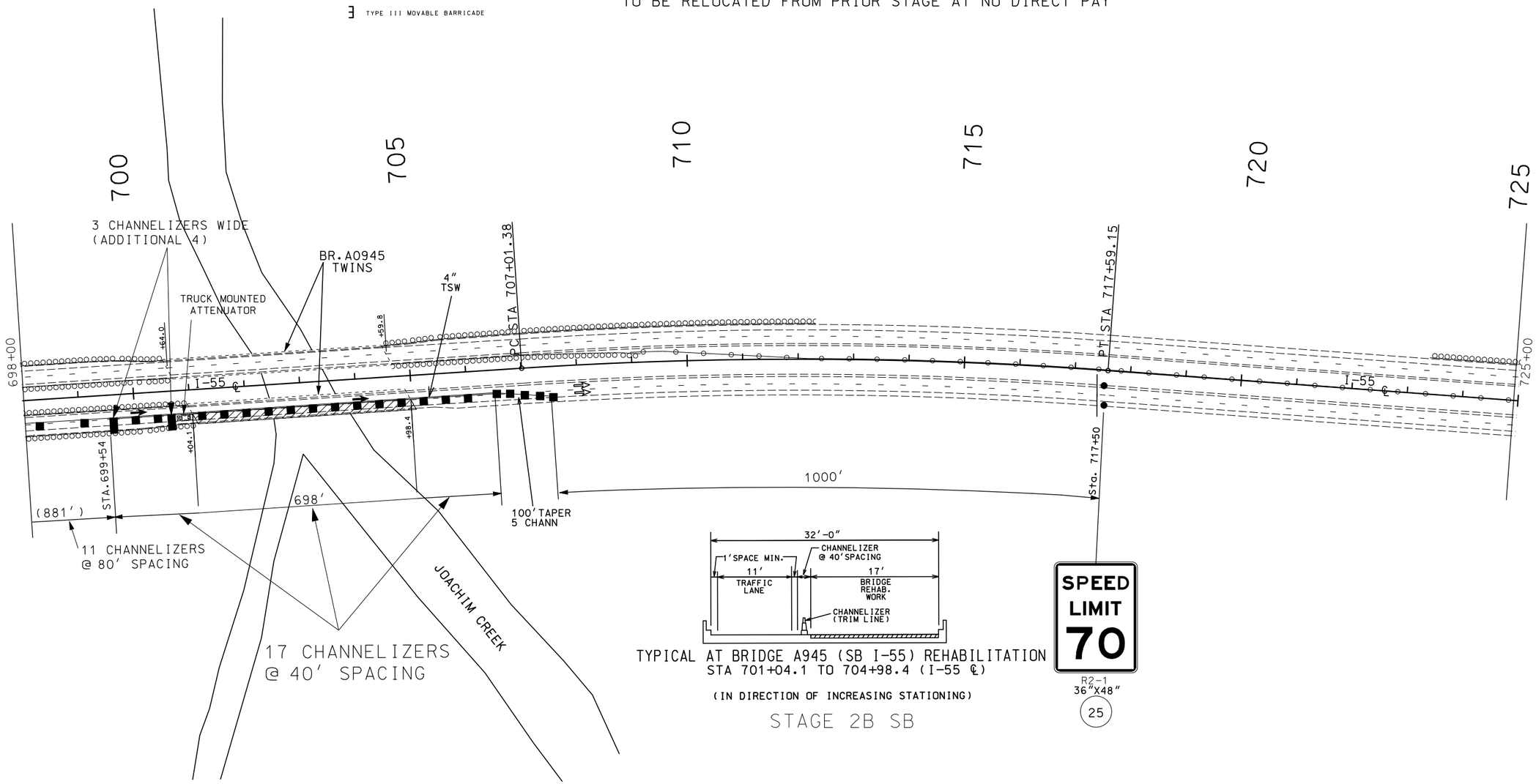

TYPICAL AT BRIDGE A945 (SB I-55) REHABILITATION
STA 701+04.1 TO 704+98.4 (I-55 ℄)

(IN DIRECTION OF INCREASING STATIONING)

STAGE 2B SB

NOTE:
TEMPORARY TRAFFIC CONTROL SHOWN ON COMBINATION PROJECT J6I3110 WILL BE PAID FOR ON THIS PROJECT. J6I3110 TEMPORARY TRAFFIC CONTROL IS FOR INFORMATIONAL USE ONLY.

BRIDGE REHABILITATION WORK

SCALE

0 100 200 300 400 500

STATE OF MISSOURI
SHIRLEY J. NORRIS
NUMBER PE-28779
PROFESSIONAL ENGINEER

THIS SHEET HAS BEEN SIGNED, SEALED AND DATED ELECTRONICALLY.

DATE PREPARED	9/29/2016
ROUTE	I-55
STATE	MO
DISTRICT	SL
SHEET NO.	19
COUNTY	JEFFERSON
JOB NO.	J6I3131
CONTRACT ID.	
PROJECT NO.	
BRIDGE NO.	

DATE	DESCRIPTION

IF A SEAL IS PRESENT ON THIS SHEET IT HAS BEEN ELECTRONICALLY SEALED AND DATED.

MISSOURI HIGHWAYS AND TRANSPORTATION COMMISSION

105 WEST CAPITOL
JEFFERSON CITY, MO 65102
1-888-ASK-MODOT (1-888-275-6636)

TRAFFIC CONTROL

STAGE 2B SB

SHEET 14 OF 76

TRAFFIC CONTROL LEGEND

- SIGN (SINGLE SIDED)
- CHANNELIZER (TRIM-LINE)
- DIRECTION INDICATOR BARRICADE
- TEMPORARY TRAFFIC BARRIER
- CHANGEABLE MESSAGE SIGN
- IMPACT ATTENUATOR
- TYPE III MOVABLE BARRICADE
- FLASHING ARROW PANEL

ADD ROAD WORK AHEAD SIGNS WITH ADVANCED WARNING RAIL SYSTEM AT 2 & 5 MILE INTERVAL BEFORE ADVANCED WARNING SIGNS

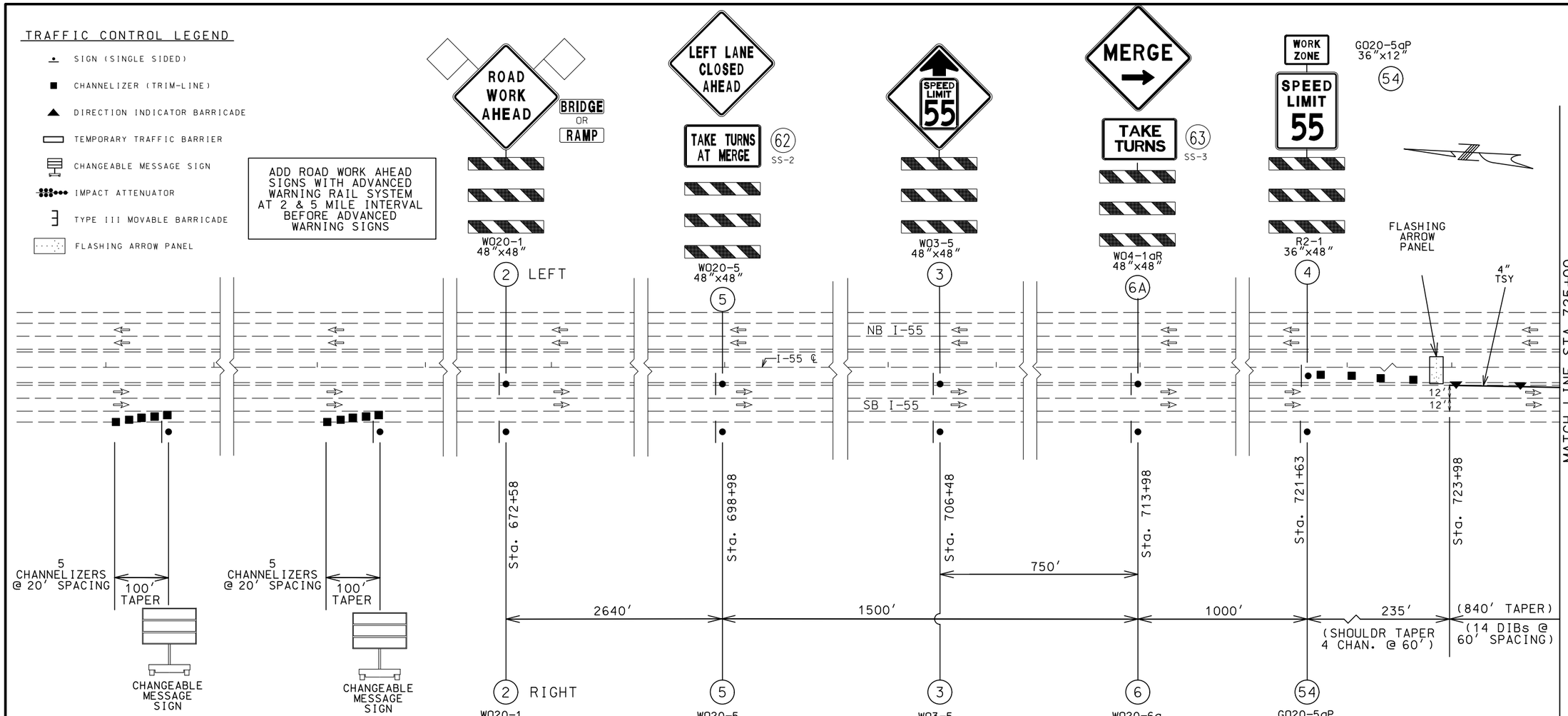

CMS LOCATED BEYOND THE MAXIMUM QUEUE LENGTH.

CMS LOCATED BEYOND THE ESTIMATED QUEUE LENGTH AT THE TIME WHEN SYSTEM ACTIVATION WILL OCCUR.

DISCLAIMER

THE PROFESSIONAL WHOSE SIGNATURE AND PERSONAL SEAL APPEAR HEREON ASSUMES RESPONSIBILITY ONLY FOR WHAT APPEARS ON THIS PAGE, AND DISCLAIMS (PURSUANT TO SECTION 327.411 RSMO) SPECIFICATION, ESTIMATES, REPORTS, OR OTHER DOCUMENTS OR INSTRUMENTS NOT SEALED BY THE UNDERSIGNED PROFESSIONAL RELATING TO OR INTENDED TO BE USED FOR ANY PART OR PARTS OF THE PROJECT TO WHICH THIS PAGE REFERS.

SHOWN TEMP.TRAFFIC CONTROL SIGNS AND DEVICES TO BE RELOCATED FROM PRIOR STAGE AT NO DIRECT PAY.

NOTE:
SEE TCP SHEET 74 OF 76 FOR DYNAMIC ZIPPER MERGE SYSTEM DETAILS AND SIGNING.

NOTE:
TEMPORARY TRAFFIC CONTROL SHOWN ON COMBINATION PROJECT J6I3110 WILL BE PAID FOR ON THIS PROJECT. J6I3110 TEMPORARY TRAFFIC CONTROL IS FOR INFORMATIONAL USE ONLY.

LEGEND

	BRIDGE REHABILITATION WORK
4" TSW	TEMPORARY SOLID WHITE TAPE
4" TIW	TEMPORARY INTERMITTENT WHITE TAPE
4" TSY	TEMPORARY SOLID YELLOW TAPE

NOT TO SCALE

STATE OF MISSOURI
SHIRLEY J. NORRIS
NUMBER PE-28779
PROFESSIONAL ENGINEER

THIS SHEET HAS BEEN SIGNED, SEALED AND DATED ELECTRONICALLY.

DATE PREPARED	9/29/2016
ROUTE	I-55
STATE	MO
DISTRICT	SL
SHEET NO.	20
COUNTY	JEFFERSON
JOB NO.	J6I3131
CONTRACT ID.	
PROJECT NO.	
BRIDGE NO.	

DESCRIPTION

DATE

IF A SEAL IS PRESENT ON THIS SHEET IT HAS BEEN ELECTRONICALLY SEALED AND DATED.

MISSOURI HIGHWAYS AND TRANSPORTATION COMMISSION
105 WEST CAPITOL
JEFFERSON CITY, MO 65102
1-888-ASK-MODOT (1-888-275-6636)

TRAFFIC CONTROL

STAGE 3A SB

SHEET 15 OF 76

TRAFFIC CONTROL LEGEND

- SIGN (SINGLE SIDED)
- CHANNELIZER (TRIM-LINE)
- DIRECTION INDICATOR BARRICADE
- TEMPORARY TRAFFIC BARRIER
- CHANGEABLE MESSAGE SIGN
- IMPACT ATTENUATOR
- TYPE III MOVABLE BARRICADE

LEGEND

4" TSW	TEMPORARY SOLID WHITE TAPE
4" TIW	TEMPORARY INTERMITTENT WHITE TAPE
4" TSY	TEMPORARY SOLID YELLOW TAPE

DISCLAIMER

THE PROFESSIONAL WHOSE SIGNATURE AND PERSONAL SEAL APPEAR HEREON ASSUMES RESPONSIBILITY ONLY FOR WHAT APPEARS ON THIS PAGE, AND DISCLAIMS (PURSUANT TO SECTION 327.411 RSMO) SPECIFICATION, ESTIMATES, REPORTS, OR OTHER DOCUMENTS OR INSTRUMENTS NOT SEALED BY THE UNDERSIGNED PROFESSIONAL RELATING TO OR INTENDED TO BE USED FOR ANY PART OR PARTS OF THE PROJECT TO WHICH THIS PAGE REFERS.

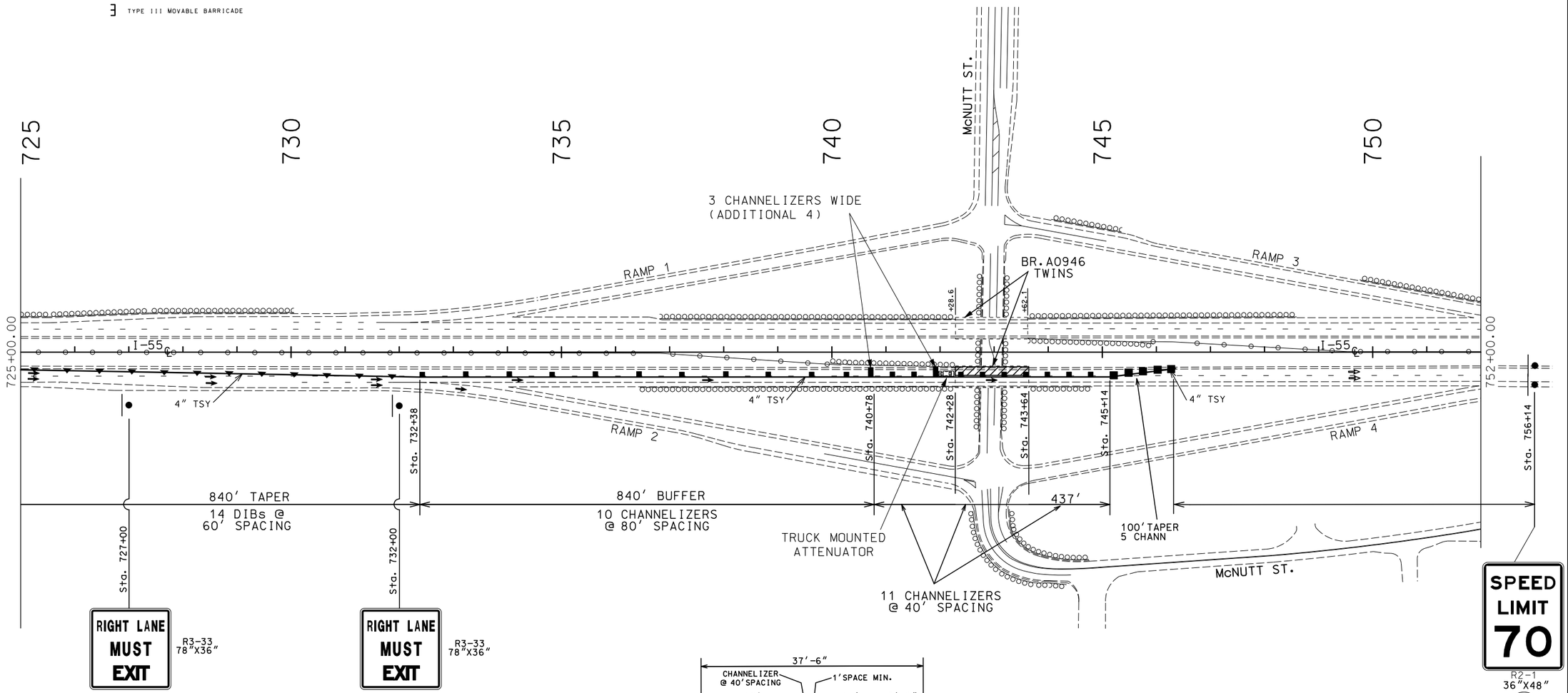

BRIDGE REHABILITATION WORK

NOTE:
TEMPORARY TRAFFIC CONTROL SHOWN ON COMBINATION PROJECT J6I3110 WILL BE PAID FOR ON THIS PROJECT. J6I3110 TEMPORARY TRAFFIC CONTROL IS FOR INFORMATIONAL USE ONLY.

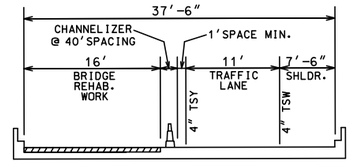

TYPICAL AT BRIDGE A946 (SB I-55) REHABILITATION
STA 742+28.1 TO 743+64.1 (I-55 ℄)
(IN DIRECTION OF INCREASING STATIONING)

STAGE 3A SB

SHOWN TEMP. TRAFFIC CONTROL SIGNS AND DEVICES TO BE RELOCATED FROM PRIOR STAGE AT NO DIRECT PAY.

SCALE
0 100 200 300 400 500

STATE OF MISSOURI
SHIRLEY J. NORRIS
NUMBER PE-28779
PROFESSIONAL ENGINEER

THIS SHEET HAS BEEN SIGNED, SEALED AND DATED ELECTRONICALLY.

DATE PREPARED	9/29/2016
ROUTE	I-55
STATE	MO
DISTRICT	SL
SHEET NO.	21
COUNTY	JEFFERSON
JOB NO.	J6I3131
CONTRACT ID.	
PROJECT NO.	
BRIDGE NO.	

DESCRIPTION

DATE

IF A SEAL IS PRESENT ON THIS SHEET IT HAS BEEN ELECTRONICALLY SEALED AND DATED.

MISSOURI HIGHWAYS AND TRANSPORTATION COMMISSION
105 WEST CAPITOL
JEFFERSON CITY, MO 65102
1-888-ASK-MODOT (1-888-275-6636)

TRAFFIC CONTROL

STAGE 3A SB

SHEET 16 OF 76

TRAFFIC CONTROL LEGEND

- SIGN (SINGLE SIDED)
- CHANNELIZER (TRIM-LINE)
- DIRECTION INDICATOR BARRICADE
- TEMPORARY TRAFFIC BARRIER
- CHANGEABLE MESSAGE SIGN
- IMPACT ATTENUATOR
- TYPE III MOVABLE BARRICADE
- FLASHING ARROW PANEL

ADD ROAD WORK AHEAD SIGNS WITH ADVANCED WARNING RAIL SYSTEM AT 2 & 5 MILE INTERVAL BEFORE ADVANCED WARNING SIGNS

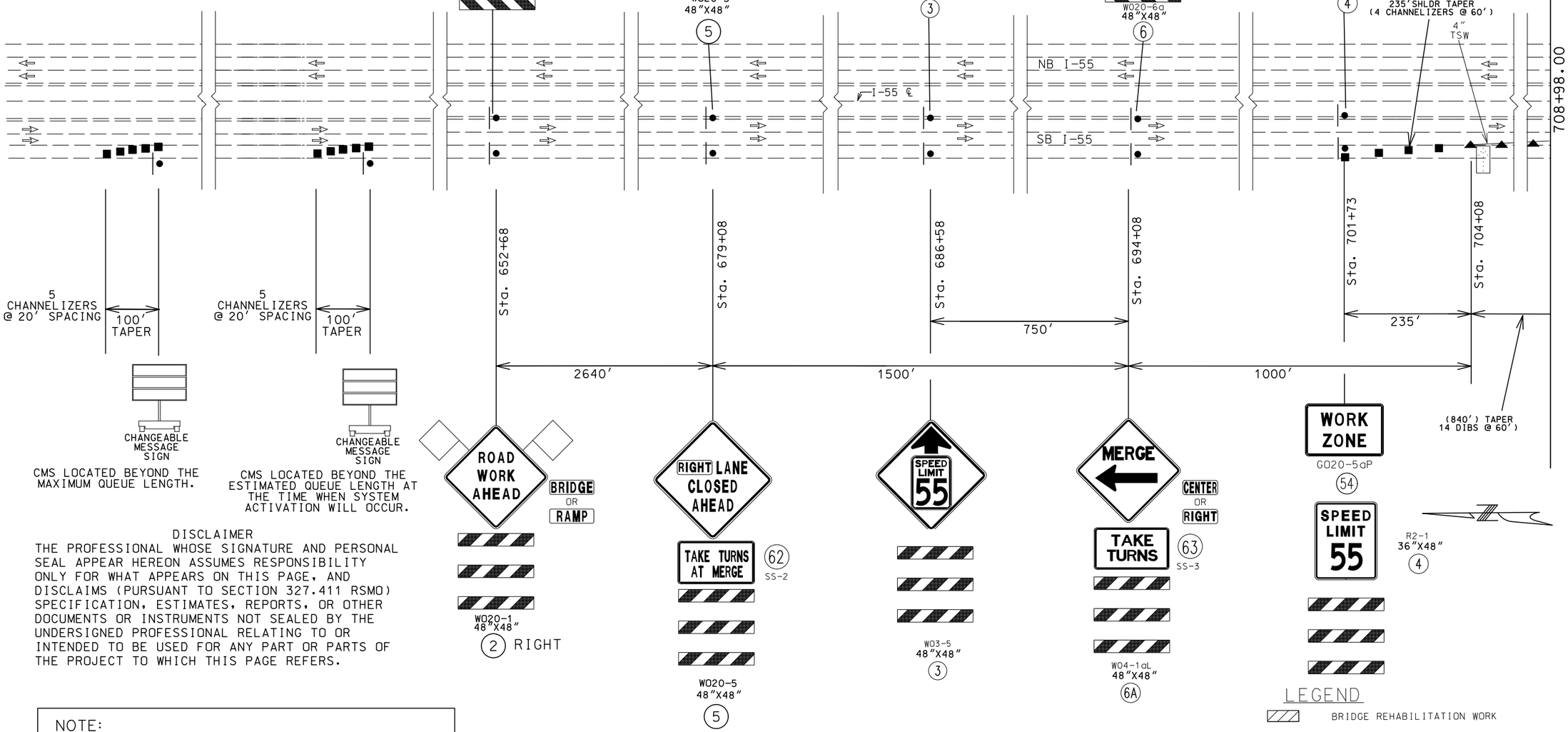

CMS LOCATED BEYOND THE MAXIMUM QUEUE LENGTH.

CMS LOCATED BEYOND THE ESTIMATED QUEUE LENGTH AT THE TIME WHEN SYSTEM ACTIVATION WILL OCCUR.

DISCLAIMER

THE PROFESSIONAL WHOSE SIGNATURE AND PERSONAL SEAL APPEAR HEREON ASSUMES RESPONSIBILITY ONLY FOR WHAT APPEARS ON THIS PAGE, AND DISCLAIMS (PURSUANT TO SECTION 327.411 RSMO) SPECIFICATION, ESTIMATES, REPORTS, OR OTHER DOCUMENTS OR INSTRUMENTS NOT SEALED BY THE UNDERSIGNED PROFESSIONAL RELATING TO OR INTENDED TO BE USED FOR ANY PART OR PARTS OF THE PROJECT TO WHICH THIS PAGE REFERS.

NOTE:
TEMPORARY TRAFFIC CONTROL SHOWN ON COMBINATION PROJECT J6I3110 WILL BE PAID FOR ON THIS PROJECT. J6I3110 TEMPORARY TRAFFIC CONTROL IS FOR INFORMATIONAL USE ONLY.

NOTE:
SEE TCP SHEET 74 OF 76 FOR DYNAMIC ZIPPER MERGE SYSTEM DETAILS AND SIGNING.

SHOWN TEMP. TRAFFIC CONTROL SIGNS AND DEVICES TO BE RELOCATED FROM PRIOR STAGE AT NO DIRECT PAY.

LEGEND

	BRIDGE REHABILITATION WORK
4" TSW	TEMPORARY SOLID WHITE TAPE
4" TIW	TEMPORARY INTERMITTENT WHITE TAPE
4" TSY	TEMPORARY SOLID YELLOW TAPE

NOT TO SCALE

STATE OF MISSOURI
SHIRLEY J. NORRIS
NUMBER PE-28779
PROFESSIONAL ENGINEER

THIS SHEET HAS BEEN SIGNED, SEALED AND DATED ELECTRONICALLY.

DATE PREPARED	10/20/2016
ROUTE	I-55
STATE	MO
DISTRICT	SL
SHEET NO.	22
COUNTY	JEFFERSON
JOB NO.	J6I3131
CONTRACT ID.	
PROJECT NO.	
BRIDGE NO.	

DESCRIPTION

DATE

MISSOURI HIGHWAYS AND TRANSPORTATION COMMISSION

105 WEST CAPITOL
JEFFERSON CITY, MO 65102
1-888-ASK-MODOT (1-888-275-6636)

IF A SEAL IS PRESENT ON THIS SHEET IT HAS BEEN ELECTRONICALLY SEALED AND DATED.

TRAFFIC CONTROL

STAGE 3B SB

SHEET 17 OF 76

SHOWN TEMP. TRAFFIC CONTROL SIGNS AND DEVICES TO BE RELOCATED FROM PRIOR STAGE AT NO DIRECT PAY.

BRIDGE REHABILITATION WORK

NOTE:
TEMPORARY TRAFFIC CONTROL SHOWN ON COMBINATION PROJECT J6I3110 WILL BE PAID FOR ON THIS PROJECT. J6I3110 TEMPORARY TRAFFIC CONTROL IS FOR INFORMATIONAL USE ONLY.

LEGEND

4" TSW	TEMPORARY SOLID WHITE TAPE
4" TIW	TEMPORARY INTERMITTENT WHITE TAPE
4" TSY	TEMPORARY SOLID YELLOW TAPE

TRAFFIC CONTROL LEGEND

- SIGN (SINGLE SIDED)
- CHANNELIZER (TRIM-LINE)
- DIRECTION INDICATOR BARRICADE
- TEMPORARY TRAFFIC BARRIER
- CHANGEABLE MESSAGE SIGN
- IMPACT ATTENUATOR
- TYPE III MOVABLE BARRICADE

DISCLAIMER
THE PROFESSIONAL WHOSE SIGNATURE AND PERSONAL SEAL APPEAR HEREON ASSUMES RESPONSIBILITY ONLY FOR WHAT APPEARS ON THIS PAGE, AND DISCLAIMS (PURSUANT TO SECTION 327.411 RSMO) SPECIFICATION, ESTIMATES, REPORTS, OR OTHER DOCUMENTS OR INSTRUMENTS NOT SEALED BY THE UNDERSIGNED PROFESSIONAL RELATING TO OR INTENDED TO BE USED FOR ANY PART OR PARTS OF THE PROJECT TO WHICH THIS PAGE REFERS.

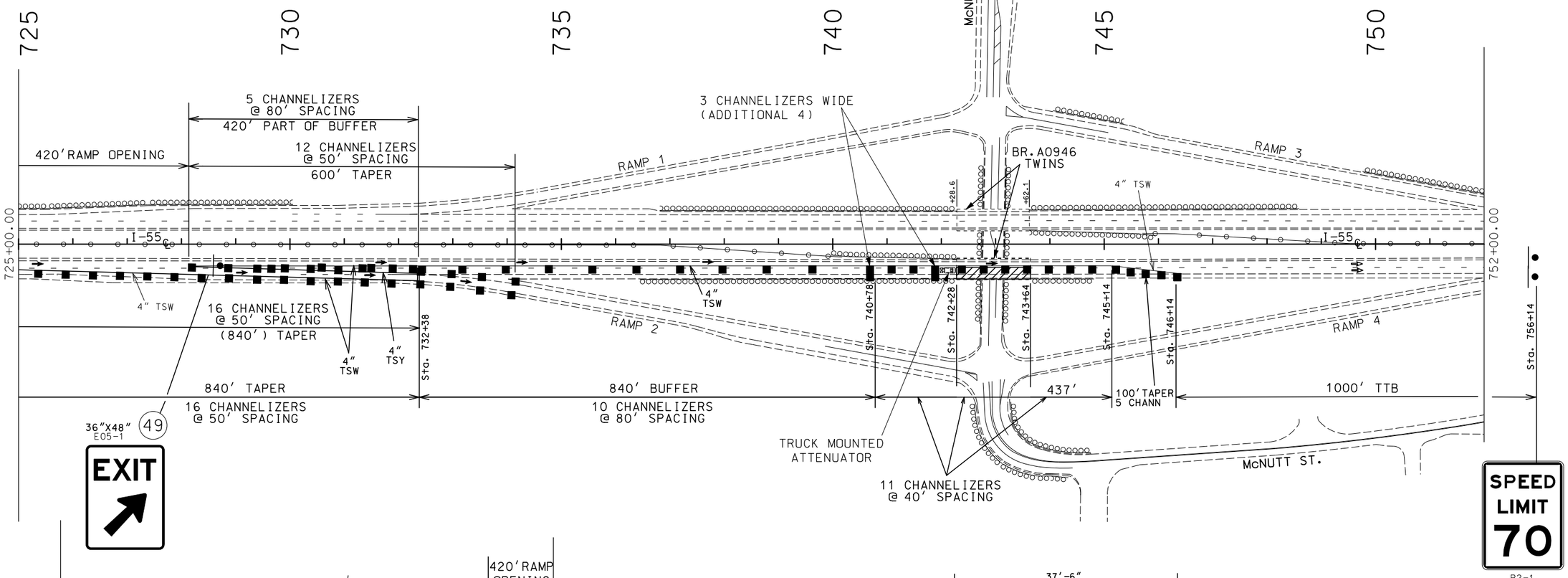

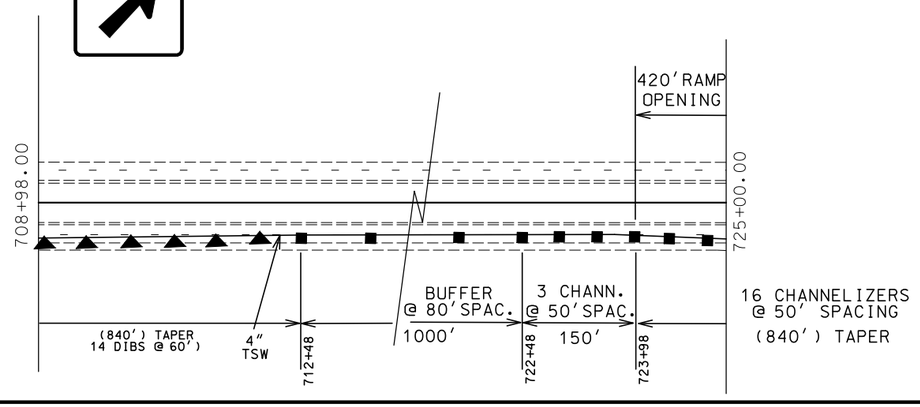

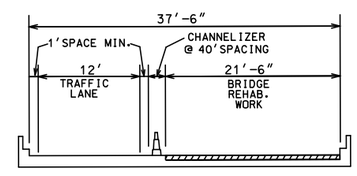

TYPICAL AT BRIDGE A946 (SB I-55) REHABILITATION
STA 742+28.1 TO 743+64.1 (I-55 ℄)
(IN DIRECTION OF INCREASING STATIONING)

STAGE 3B SB

SCALE
0 100 200 300 400 500

STATE OF MISSOURI
SHIRLEY J. NORRIS
NUMBER PE-28779
PROFESSIONAL ENGINEER
THIS SHEET HAS BEEN SIGNED, SEALED AND DATED ELECTRONICALLY.

DATE PREPARED	
10/20/2016	
ROUTE	STATE
I-55	MO
DISTRICT	SHEET NO.
SL	23
COUNTY	
JEFFERSON	
JOB NO.	
J6I3131	
CONTRACT ID.	
PROJECT NO.	
BRIDGE NO.	

DATE	DESCRIPTION

IF A SEAL IS PRESENT ON THIS SHEET IT HAS BEEN ELECTRONICALLY SEALED AND DATED.

MISSOURI HIGHWAYS AND TRANSPORTATION COMMISSION
105 WEST CAPITOL
JEFFERSON CITY, MO 65102
1-888-ASK-MODOT (1-888-275-6636)

TRAFFIC CONTROL
STAGE 3B SB

SHEET 18 OF 76

SHEET LEFT BLANK
INTENTIONALLY

STATE OF MISSOURI
SHIRLEY J. NORRIS
NUMBER
PE-28779
PROFESSIONAL ENGINEER

THIS SHEET HAS BEEN SIGNED, SEALED AND DATED ELECTRONICALLY.

DATE PREPARED	9/29/2016
ROUTE	I-55
STATE	MO
DISTRICT	SL
SHEET NO.	24
COUNTY	JEFFERSON
JOB NO.	J6I3131
CONTRACT ID.	
PROJECT NO.	
BRIDGE NO.	

DATE	DESCRIPTION

IF A SEAL IS PRESENT ON THIS SHEET IT HAS BEEN ELECTRONICALLY SEALED AND DATED.

MISSOURI HIGHWAYS AND TRANSPORTATION COMMISSION

105 WEST CAPITOL
JEFFERSON CITY, MO 65102
1-888-ASK-MODOT (1-888-275-6636)

TRAFFIC CONTROL

SHEET 19 OF 76

TRAFFIC CONTROL LEGEND

- SIGN (SINGLE SIDED)
- CHANNELIZER (TRIM-LINE)
- DIRECTION INDICATOR BARRICADE
- TEMPORARY TRAFFIC BARRIER
- CHANGEABLE MESSAGE SIGN
- IMPACT ATTENUATOR
- TYPE III MOVABLE BARRICADE
- FLASHING ARROW PANEL

ADD ROAD WORK AHEAD SIGNS WITH ADVANCED WARNING RAIL SYSTEM AT 2 & 5 MILE INTERVAL BEFORE ADVANCED WARNING SIGNS

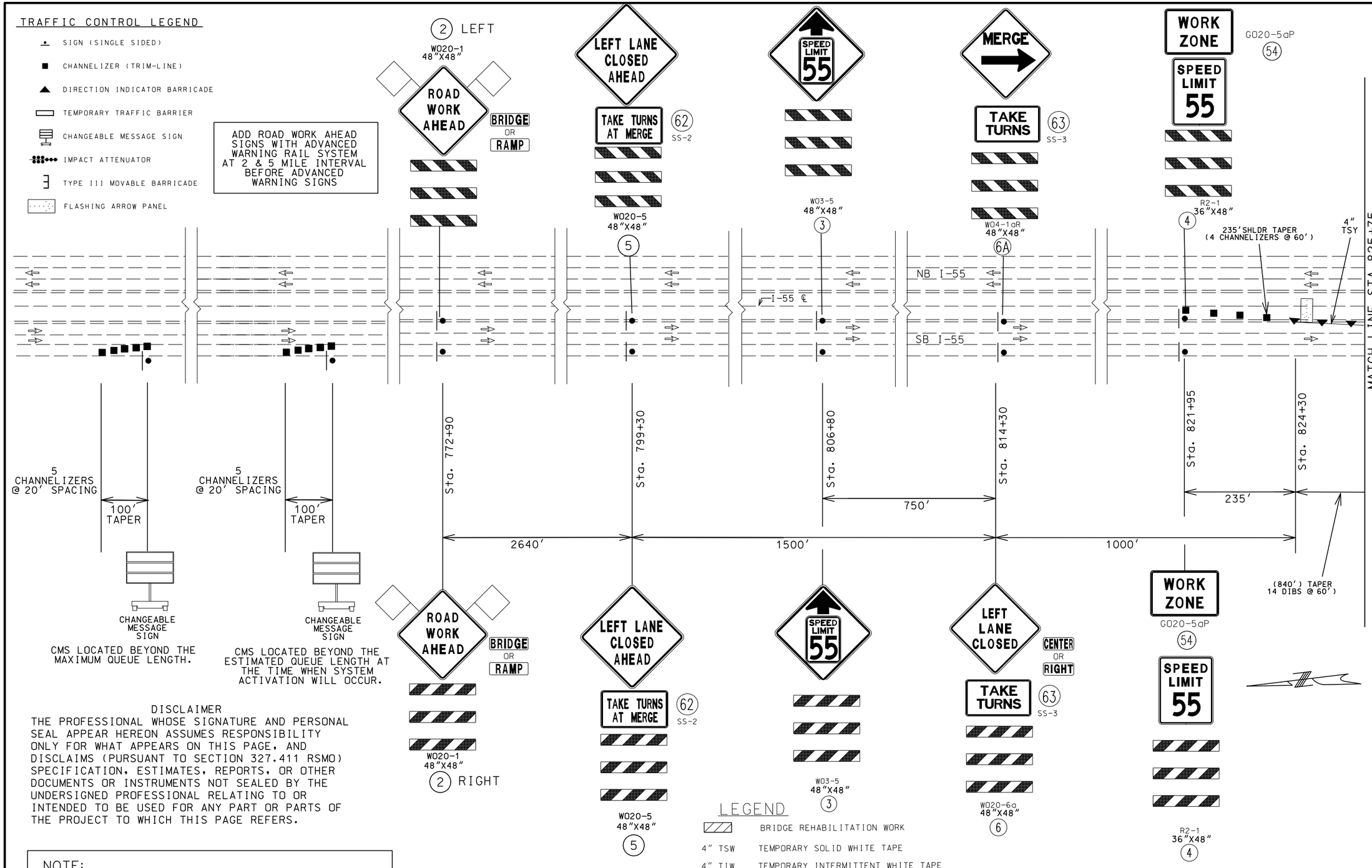

DISCLAIMER

THE PROFESSIONAL WHOSE SIGNATURE AND PERSONAL SEAL APPEAR HEREON ASSUMES RESPONSIBILITY ONLY FOR WHAT APPEARS ON THIS PAGE, AND DISCLAIMS (PURSUANT TO SECTION 327.411 RSMO) SPECIFICATION, ESTIMATES, REPORTS, OR OTHER DOCUMENTS OR INSTRUMENTS NOT SEALED BY THE UNDERSIGNED PROFESSIONAL RELATING TO OR INTENDED TO BE USED FOR ANY PART OR PARTS OF THE PROJECT TO WHICH THIS PAGE REFERS.

NOTE:
TEMPORARY TRAFFIC CONTROL SHOWN ON COMBINATION PROJECT J6I3110 WILL BE PAID FOR ON THIS PROJECT. J6I3110 TEMPORARY TRAFFIC CONTROL IS FOR INFORMATIONAL USE ONLY.

LEGEND

	BRIDGE REHABILITATION WORK
4" TSW	TEMPORARY SOLID WHITE TAPE
4" TIW	TEMPORARY INTERMITTENT WHITE TAPE
4" TSY	TEMPORARY SOLID YELLOW TAPE

NOTE:
SEE TCP SHEET 74 OF 76 FOR DYNAMIC ZIPPER MERGE SYSTEM DETAILS AND SIGNING.

SHOWN TEMP. TRAFFIC CONTROL SIGNS AND DEVICES TO BE RELOCATED FROM PRIOR STAGE AT NO DIRECT PAY

NOT TO SCALE

STATE OF MISSOURI
SHIRLEY J. NORRIS
NUMBER PE-28779
PROFESSIONAL ENGINEER

THIS SHEET HAS BEEN SIGNED, SEALED AND DATED ELECTRONICALLY.

DATE PREPARED	9/29/2016
ROUTE	I-55
STATE	MO
DISTRICT	SL
SHEET NO.	25
COUNTY	JEFFERSON
JOB NO.	J6I3131
CONTRACT ID.	
PROJECT NO.	
BRIDGE NO.	

DESCRIPTION

DATE

MISSOURI HIGHWAYS AND TRANSPORTATION COMMISSION
105 WEST CAPITOL
JEFFERSON CITY, MO 65102
1-888-ASK-MODOT (1-888-275-6636)

IF A SEAL IS PRESENT ON THIS SHEET IT HAS BEEN ELECTRONICALLY SEALED AND DATED.

TRAFFIC CONTROL
STAGE 4A SB

SHEET 20 OF 76

TRAFFIC CONTROL LEGEND

- SIGN (SINGLE SIDED)
- CHANNELIZER (TRIM-LINE)
- DIRECTION INDICATOR BARRICADE
- TEMPORARY TRAFFIC BARRIER
- CHANGEABLE MESSAGE SIGN
- IMPACT ATTENUATOR
- TYPE III MOVABLE BARRICADE

LEGEND

4" TSW	TEMPORARY SOLID WHITE TAPE
4" TIW	TEMPORARY INTERMITTENT WHITE TAPE
4" TSY	TEMPORARY SOLID YELLOW TAPE

SHOWN TEMP. TRAFFIC CONTROL SIGNS AND DEVICES TO BE RELOCATED FROM PRIOR STAGE AT NO DIRECT PAY

DISCLAIMER
THE PROFESSIONAL WHOSE SIGNATURE AND PERSONAL SEAL APPEAR HEREON ASSUMES RESPONSIBILITY ONLY FOR WHAT APPEARS ON THIS PAGE, AND DISCLAIMS (PURSUANT TO SECTION 327.411 RSMO) SPECIFICATION, ESTIMATES, REPORTS, OR OTHER DOCUMENTS OR INSTRUMENTS NOT SEALED BY THE UNDERSIGNED PROFESSIONAL RELATING TO OR INTENDED TO BE USED FOR ANY PART OR PARTS OF THE PROJECT TO WHICH THIS PAGE REFERS.

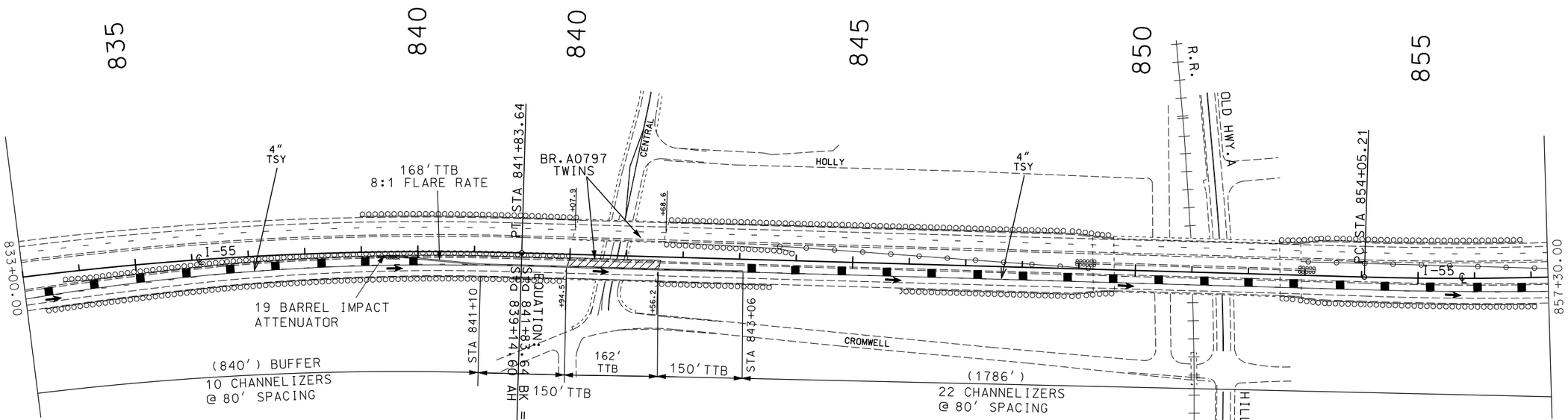

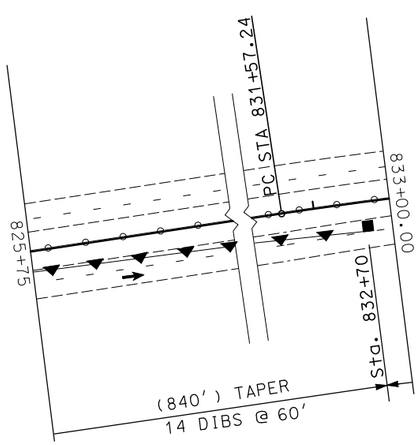

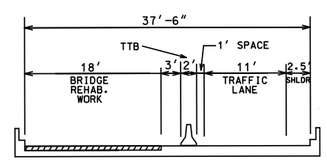

TYPICAL AT BRIDGE A797 (SB I-55) REHABILITATION
STA 839+94.5 TO 841+56.2 (I-55 ℄)

(IN DIRECTION OF INCREASING STATIONING)

STAGE 4A SB

NOTE:
TEMPORARY TRAFFIC CONTROL SHOWN ON COMBINATION PROJECT J6I3110 WILL BE PAID FOR ON THIS PROJECT. J6I3110 TEMPORARY TRAFFIC CONTROL IS FOR INFORMATIONAL USE ONLY.

BRIDGE REHABILITATION WORK

SCALE
0 100 200 300 400 500

37'-6"

STATE OF MISSOURI
SHIRLEY J. NORRIS
NUMBER PE-28779
PROFESSIONAL ENGINEER
THIS SHEET HAS BEEN SIGNED, SEALED AND DATED ELECTRONICALLY.

DATE PREPARED	9/29/2016
ROUTE	I-55
STATE	MO
DISTRICT	SL
SHEET NO.	26
COUNTY	JEFFERSON
JOB NO.	J6I3131
CONTRACT ID.	
PROJECT NO.	
BRIDGE NO.	

DESCRIPTION

DATE

IF A SEAL IS PRESENT ON THIS SHEET IT HAS BEEN ELECTRONICALLY SEALED AND DATED.

MISSOURI HIGHWAYS AND TRANSPORTATION COMMISSION
105 WEST CAPITOL
JEFFERSON CITY, MO 65102
1-888-ASK-MODOT (1-888-275-6636)

TRAFFIC CONTROL

STAGE 4A SB

SHEET 21 OF 76

TRAFFIC CONTROL LEGEND

- SIGN (SINGLE SIDED)
- CHANNELIZER (TRIM-LINE)
- DIRECTION INDICATOR BARRICADE
- TEMPORARY TRAFFIC BARRIER
- CHANGEABLE MESSAGE SIGN
- IMPACT ATTENUATOR
- TYPE III MOVABLE BARRICADE

LEGEND

4" TSW	TEMPORARY SOLID WHITE TAPE
4" TIW	TEMPORARY INTERMITTENT WHITE TAPE
4" TSY	TEMPORARY SOLID YELLOW TAPE

DISCLAIMER
THE PROFESSIONAL WHOSE SIGNATURE AND PERSONAL SEAL APPEAR HEREON ASSUMES RESPONSIBILITY ONLY FOR WHAT APPEARS ON THIS PAGE, AND DISCLAIMS (PURSUANT TO SECTION 327.411 RSMO) SPECIFICATION, ESTIMATES, REPORTS, OR OTHER DOCUMENTS OR INSTRUMENTS NOT SEALED BY THE UNDERSIGNED PROFESSIONAL RELATING TO OR INTENDED TO BE USED FOR ANY PART OR PARTS OF THE PROJECT TO WHICH THIS PAGE REFERS.

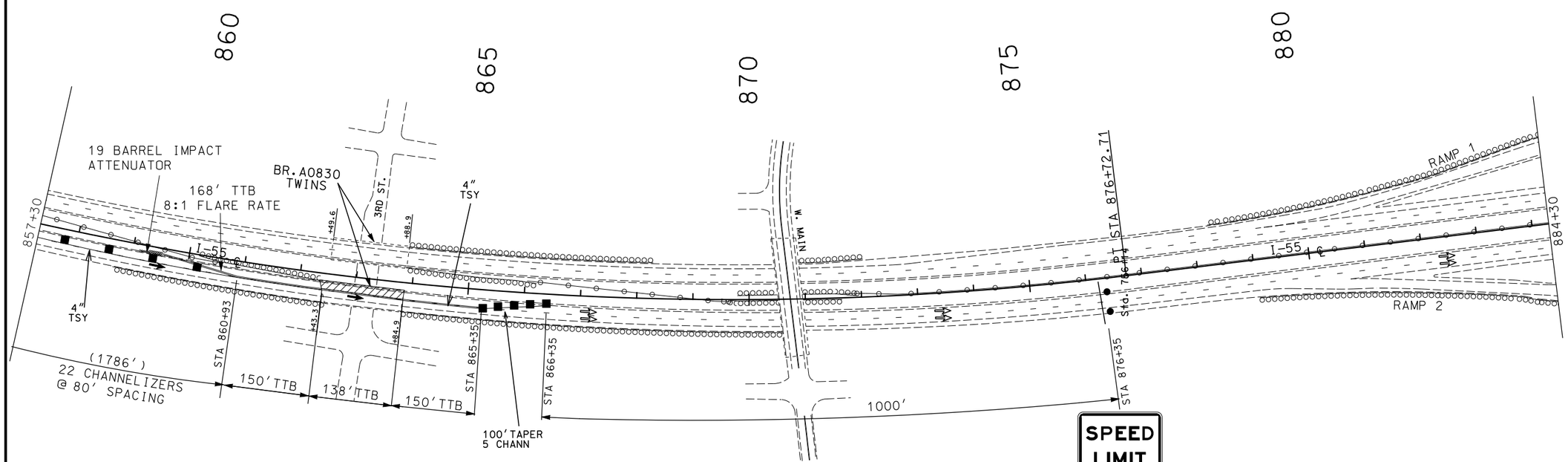

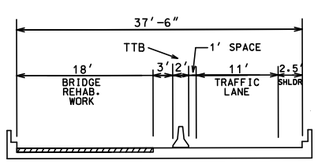

TYPICAL AT BRIDGE A830 (SB I-55) REHABILITATION
STA 862+43.3 TO 863+84.9 (I-55 ℄)

(IN DIRECTION OF INCREASING STATIONING)

STAGE 4A SB

SHOWN TEMP. TRAFFIC CONTROL SIGNS AND DEVICES TO BE RELOCATED FROM PRIOR STAGE AT NO DIRECT PAY

BRIDGE REHABILITATION WORK

SPEED LIMIT 70
R2-1
36"X48"
25

NOTE:
TEMPORARY TRAFFIC CONTROL SHOWN ON COMBINATION PROJECT J6I3110 WILL BE PAID FOR ON THIS PROJECT. J6I3110 TEMPORARY TRAFFIC CONTROL IS FOR INFORMATIONAL USE ONLY.

SCALE
0 100 200 300 400 500

STATE OF MISSOURI
SHIRLEY J. NORRIS
NUMBER PE-28779
PROFESSIONAL ENGINEER
THIS SHEET HAS BEEN SIGNED, SEALED AND DATED ELECTRONICALLY.

DATE PREPARED	9/29/2016
ROUTE	I-55
STATE	MO
DISTRICT	SL
SHEET NO.	27
COUNTY	JEFFERSON
JOB NO.	J6I3131
CONTRACT ID.	
PROJECT NO.	
BRIDGE NO.	

DATE	DESCRIPTION

MISSOURI HIGHWAYS AND TRANSPORTATION COMMISSION
105 WEST CAPITOL
JEFFERSON CITY, MO 65102
1-888-ASK-MODOT (1-888-275-6636)

IF A SEAL IS PRESENT ON THIS SHEET IT HAS BEEN ELECTRONICALLY SEALED AND DATED.

TRAFFIC CONTROL
STAGE 4A SB

TRAFFIC CONTROL LEGEND

- SIGN (SINGLE SIDED)
- CHANNELIZER (TRIM-LINE)
- DIRECTION INDICATOR BARRICADE
- TEMPORARY TRAFFIC BARRIER
- CHANGEABLE MESSAGE SIGN
- IMPACT ATTENUATOR
- TYPE III MOVABLE BARRICADE
- FLASHING ARROW PANEL

ADD ROAD WORK AHEAD SIGNS WITH ADVANCED WARNING RAIL SYSTEM AT 2 & 5 MILE INTERVAL BEFORE ADVANCED WARNING SIGNS

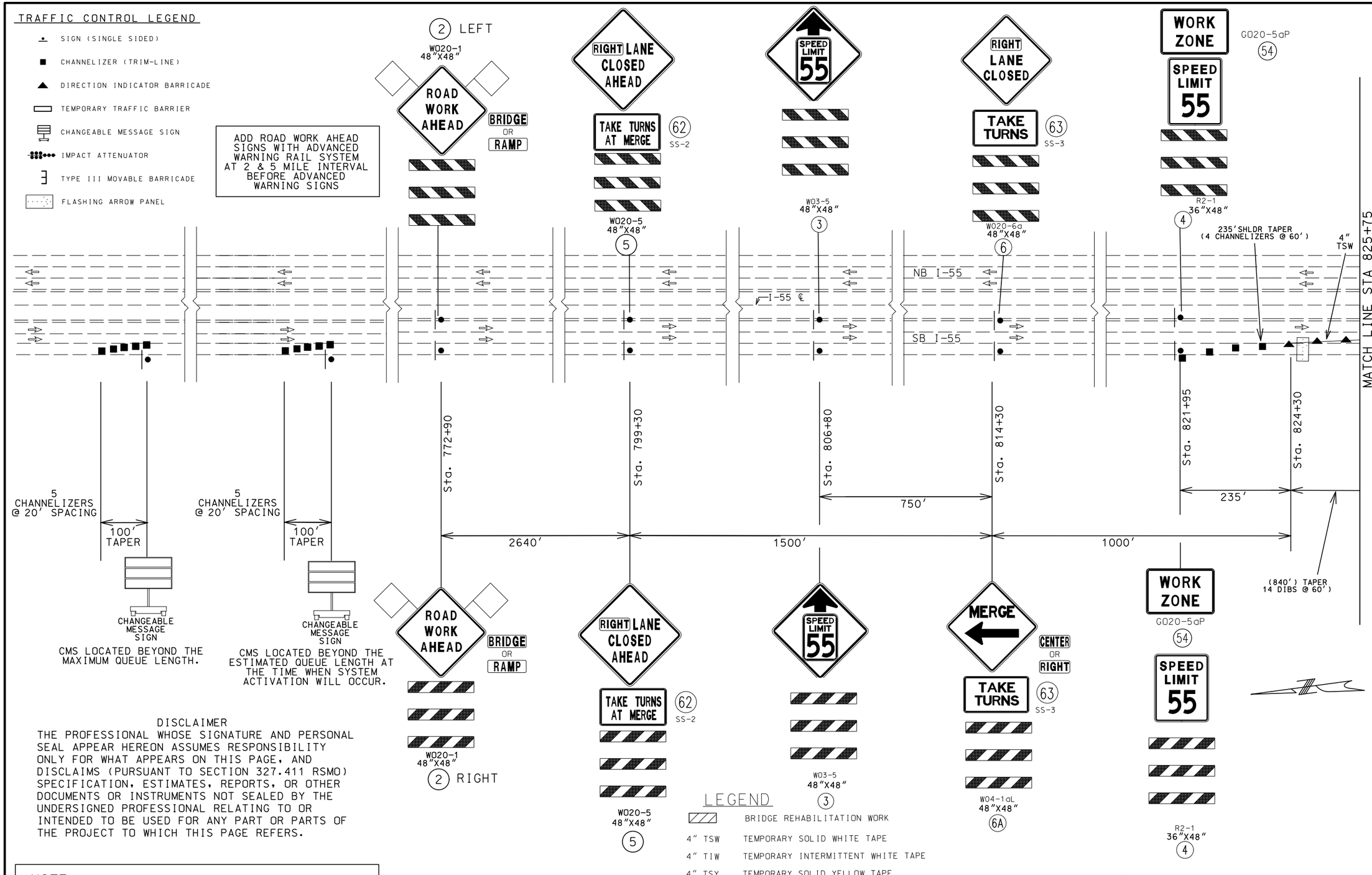

DISCLAIMER

THE PROFESSIONAL WHOSE SIGNATURE AND PERSONAL SEAL APPEAR HEREON ASSUMES RESPONSIBILITY ONLY FOR WHAT APPEARS ON THIS PAGE, AND DISCLAIMS (PURSUANT TO SECTION 327.411 RSMO) SPECIFICATION, ESTIMATES, REPORTS, OR OTHER DOCUMENTS OR INSTRUMENTS NOT SEALED BY THE UNDERSIGNED PROFESSIONAL RELATING TO OR INTENDED TO BE USED FOR ANY PART OR PARTS OF THE PROJECT TO WHICH THIS PAGE REFERS.

NOTE:
TEMPORARY TRAFFIC CONTROL SHOWN ON COMBINATION PROJECT J6I3110 WILL BE PAID FOR ON THIS PROJECT. J6I3110 TEMPORARY TRAFFIC CONTROL IS FOR INFORMATIONAL USE ONLY.

LEGEND

	BRIDGE REHABILITATION WORK
4" TSW	TEMPORARY SOLID WHITE TAPE
4" TIW	TEMPORARY INTERMITTENT WHITE TAPE
4" TSY	TEMPORARY SOLID YELLOW TAPE

NOTE:
SEE TCP SHEET 74 OF 76 FOR DYNAMIC ZIPPER MERGE SYSTEM DETAILS AND SIGNING.

SHOWN TEMP. TRAFFIC CONTROL SIGNS AND DEVICES TO BE RELOCATED FROM PRIOR STAGE AT NO DIRECT PAY

NOT TO SCALE

STATE OF MISSOURI
SHIRLEY J. NORRIS
NUMBER PE-28779
PROFESSIONAL ENGINEER

THIS SHEET HAS BEEN SIGNED, SEALED AND DATED ELECTRONICALLY.

DATE PREPARED	9/29/2016
ROUTE	I-55
STATE	MO
DISTRICT	SL
SHEET NO.	28
COUNTY	JEFFERSON
JOB NO.	J6I3131
CONTRACT ID.	
PROJECT NO.	
BRIDGE NO.	

DESCRIPTION

DATE

MISSOURI HIGHWAYS AND TRANSPORTATION COMMISSION

105 WEST CAPITOL
JEFFERSON CITY, MO 65102
1-888-ASK-MODOT (1-888-275-6636)

IF A SEAL IS PRESENT ON THIS SHEET IT HAS BEEN ELECTRONICALLY SEALED AND DATED.

TRAFFIC CONTROL

STAGE 4B SB

SHEET 23 OF 76

TRAFFIC CONTROL LEGEND

- SIGN (SINGLE SIDED)
- CHANNELIZER (TRIM-LINE)
- DIRECTION INDICATOR BARRICADE
- TEMPORARY TRAFFIC BARRIER
- CHANGEABLE MESSAGE SIGN
- IMPACT ATTENUATOR
- TYPE III MOVABLE BARRICADE

LEGEND

4" TSW	TEMPORARY SOLID WHITE TAPE
4" TIW	TEMPORARY INTERMITTENT WHITE TAPE
4" TSY	TEMPORARY SOLID YELLOW TAPE

SHOWN TEMP. TRAFFIC CONTROL SIGNS AND DEVICES TO BE RELOCATED FROM PRIOR STAGE AT NO DIRECT PAY

DISCLAIMER
THE PROFESSIONAL WHOSE SIGNATURE AND PERSONAL SEAL APPEAR HEREON ASSUMES RESPONSIBILITY ONLY FOR WHAT APPEARS ON THIS PAGE, AND DISCLAIMS (PURSUANT TO SECTION 327.411 RSMO) SPECIFICATION, ESTIMATES, REPORTS, OR OTHER DOCUMENTS OR INSTRUMENTS NOT SEALED BY THE UNDERSIGNED PROFESSIONAL RELATING TO OR INTENDED TO BE USED FOR ANY PART OR PARTS OF THE PROJECT TO WHICH THIS PAGE REFERS.

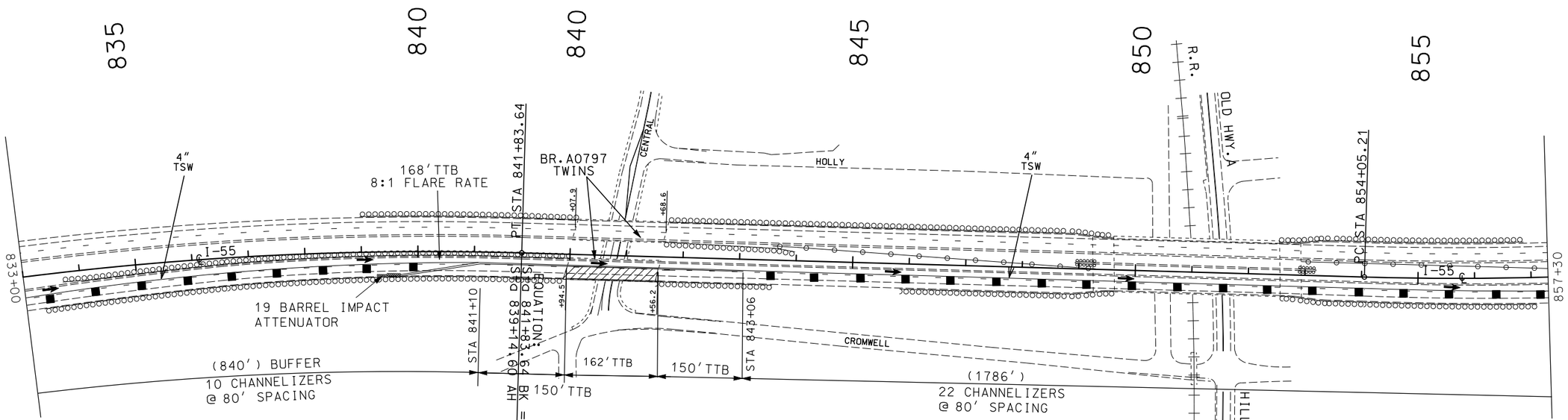

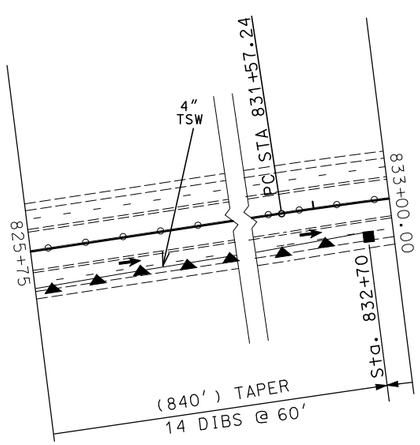

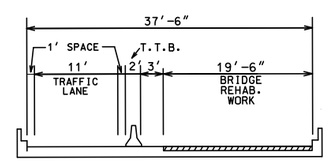

TYPICAL AT BRIDGE A797 (SB I-55) REHABILITATION
STA 839+94.5 TO 841+56.2 (I-55 ℄)

(IN DIRECTION OF INCREASING STATIONING)

STAGE 4B SB

NOTE:
TEMPORARY TRAFFIC CONTROL SHOWN ON COMBINATION PROJECT J6I3110 WILL BE PAID FOR ON THIS PROJECT. J6I3110 TEMPORARY TRAFFIC CONTROL IS FOR INFORMATIONAL USE ONLY.

BRIDGE REHABILITATION WORK

SCALE
0 100 200 300 400 500

STATE OF MISSOURI
SHIRLEY J. NORRIS
NUMBER PE-28779
PROFESSIONAL ENGINEER
THIS SHEET HAS BEEN SIGNED, SEALED AND DATED ELECTRONICALLY.

DATE PREPARED	9/29/2016
ROUTE	I-55
STATE	MO
DISTRICT	SL
SHEET NO.	29
COUNTY	JEFFERSON
JOB NO.	J6I3131
CONTRACT ID.	
PROJECT NO.	
BRIDGE NO.	

DESCRIPTION
DATE

IF A SEAL IS PRESENT ON THIS SHEET IT HAS BEEN ELECTRONICALLY SEALED AND DATED.

MISSOURI HIGHWAYS AND TRANSPORTATION COMMISSION
105 WEST CAPITOL
JEFFERSON CITY, MO 65102
1-888-ASK-MODOT (1-888-275-6636)

TRAFFIC CONTROL
STAGE 4B SB

SHEET 24 OF 76

TRAFFIC CONTROL LEGEND

- SIGN (SINGLE SIDED)
- CHANNELIZER (TRIM-LINE)
- DIRECTION INDICATOR BARRICADE
- TEMPORARY TRAFFIC BARRIER
- CHANGEABLE MESSAGE SIGN
- IMPACT ATTENUATOR
- TYPE III MOVABLE BARRICADE

LEGEND

4" TSW	TEMPORARY SOLID WHITE TAPE
4" TIW	TEMPORARY INTERMITTENT WHITE TAPE
4" TSY	TEMPORARY SOLID YELLOW TAPE

SHOWN TEMP. TRAFFIC CONTROL SIGNS AND DEVICES TO BE RELOCATED FROM PRIOR STAGE AT NO DIRECT PAY

DISCLAIMER

THE PROFESSIONAL WHOSE SIGNATURE AND PERSONAL SEAL APPEAR HEREON ASSUMES RESPONSIBILITY ONLY FOR WHAT APPEARS ON THIS PAGE, AND DISCLAIMS (PURSUANT TO SECTION 327.411 RSMO) SPECIFICATION, ESTIMATES, REPORTS, OR OTHER DOCUMENTS OR INSTRUMENTS NOT SEALED BY THE UNDERSIGNED PROFESSIONAL RELATING TO OR INTENDED TO BE USED FOR ANY PART OR PARTS OF THE PROJECT TO WHICH THIS PAGE REFERS.

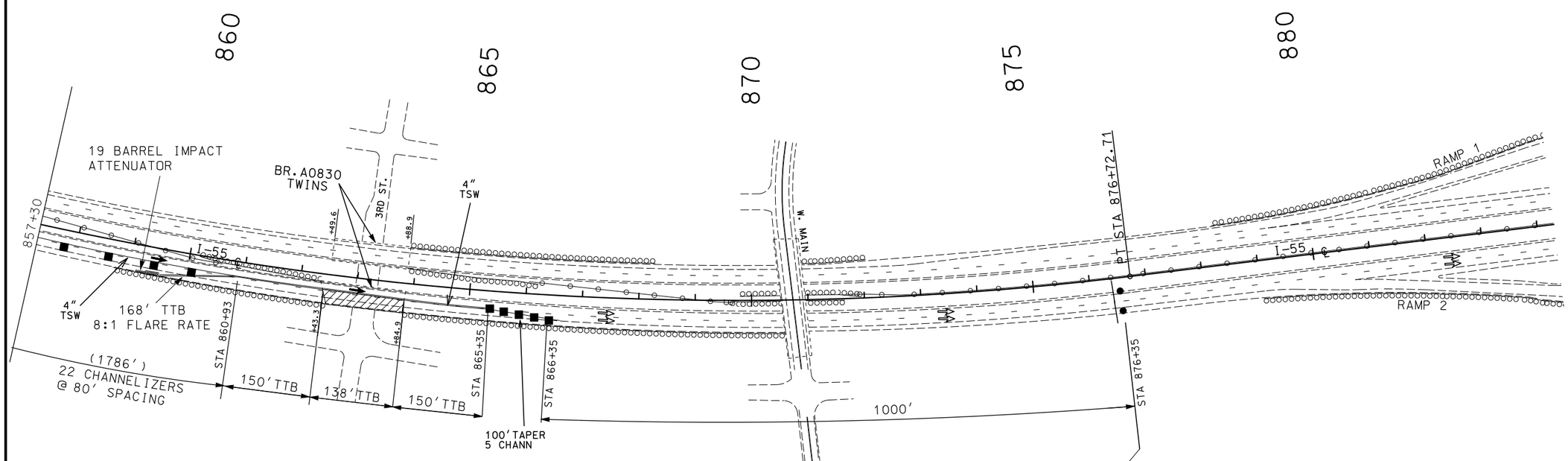

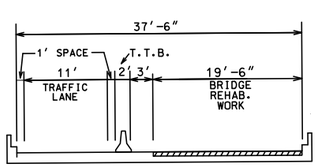

TYPICAL AT BRIDGE A830 (SB I-55) REHABILITATION
STA 862+43.3 TO 863+84.9 (I-55 ℄)

(IN DIRECTION OF INCREASING STATIONING)

STAGE 4B SB

R2-1
36"X48"

25

BRIDGE REHABILITATION WORK

SCALE

0 100 200 300 400 500

STATE OF MISSOURI
SHIRLEY J. NORRIS
NUMBER PE-28779
PROFESSIONAL ENGINEER

THIS SHEET HAS BEEN SIGNED, SEALED AND DATED ELECTRONICALLY.

DATE PREPARED 9/29/2016	
ROUTE I-55	STATE MO
DISTRICT SL	SHEET NO. 30
COUNTY JEFFERSON	
JOB NO. J6I3131	
CONTRACT ID.	
PROJECT NO.	
BRIDGE NO.	

DATE	DESCRIPTION

IF A SEAL IS PRESENT ON THIS SHEET IT HAS BEEN ELECTRONICALLY SEALED AND DATED.

MISSOURI HIGHWAYS AND TRANSPORTATION COMMISSION

105 WEST CAPITOL
JEFFERSON CITY, MO 65102
1-888-ASK-MODOT (1-888-275-6636)

TRAFFIC CONTROL

STAGE 4B SB

SHEET 25 OF 76

TRAFFIC CONTROL LEGEND

- SIGN (SINGLE SIDED)
- CHANNELIZER (TRIM-LINE)
- DIRECTION INDICATOR BARRICADE
- TEMPORARY TRAFFIC BARRIER
- CHANGEABLE MESSAGE SIGN
- IMPACT ATTENUATOR
- TYPE III MOVABLE BARRICADE

ADD ROAD WORK AHEAD SIGNS WITH ADVANCED WARNING RAIL SYSTEM AT 2 & 5 MILE INTERVAL BEFORE ADVANCED WARNING SIGNS

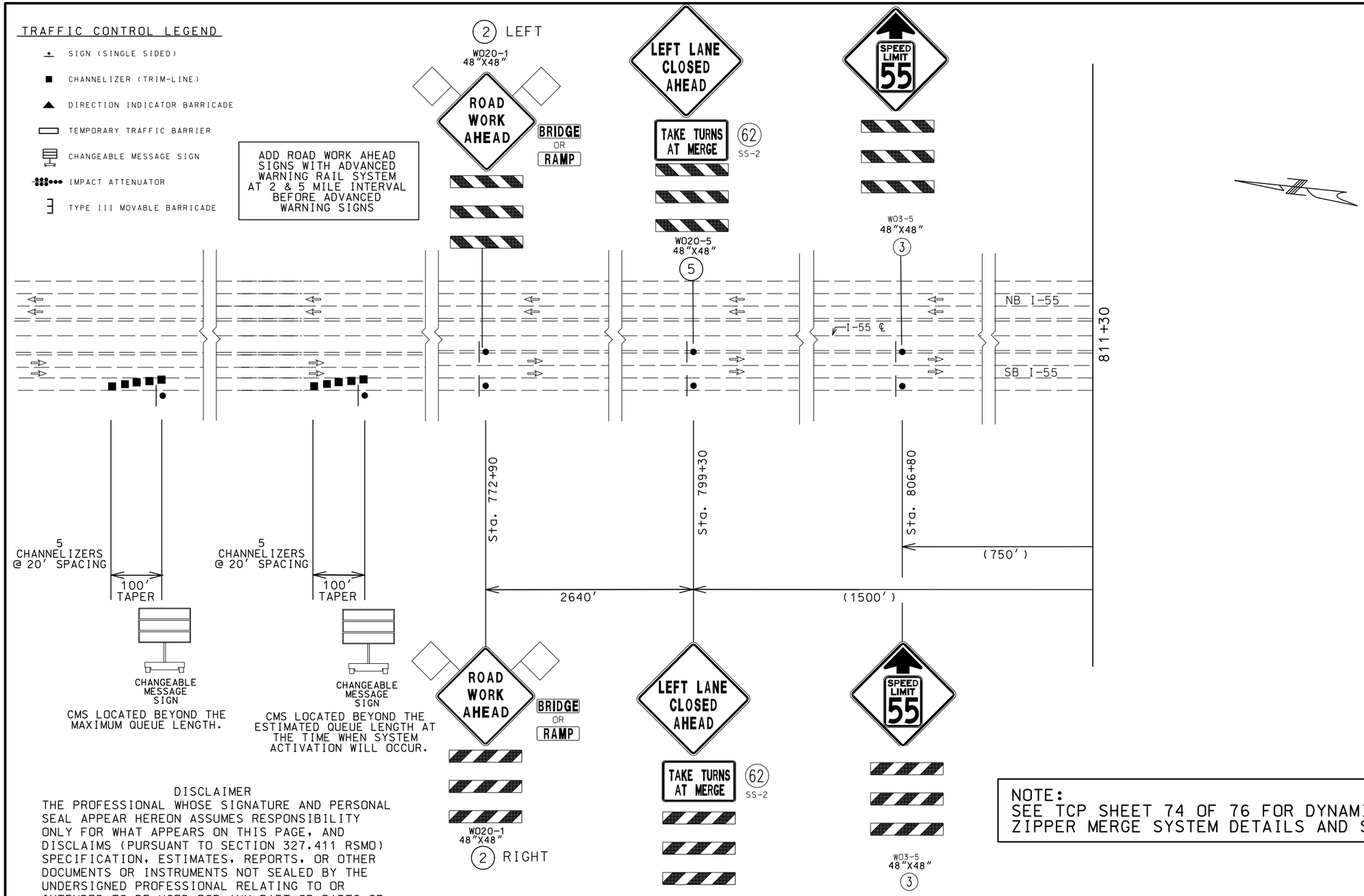

CMS LOCATED BEYOND THE MAXIMUM QUEUE LENGTH.

CMS LOCATED BEYOND THE ESTIMATED QUEUE LENGTH AT THE TIME WHEN SYSTEM ACTIVATION WILL OCCUR.

DISCLAIMER
THE PROFESSIONAL WHOSE SIGNATURE AND PERSONAL SEAL APPEAR HEREON ASSUMES RESPONSIBILITY ONLY FOR WHAT APPEARS ON THIS PAGE, AND DISCLAIMS (PURSUANT TO SECTION 327.411 RSMO) SPECIFICATION, ESTIMATES, REPORTS, OR OTHER DOCUMENTS OR INSTRUMENTS NOT SEALED BY THE UNDERSIGNED PROFESSIONAL RELATING TO OR INTENDED TO BE USED FOR ANY PART OR PARTS OF THE PROJECT TO WHICH THIS PAGE REFERS.

NOTE:
SEE TCP SHEET 74 OF 76 FOR DYNAMIC ZIPPER MERGE SYSTEM DETAILS AND SIGNING.

LEGEND

	BRIDGE REHABILITATION WORK
4" TSW	TEMPORARY SOLID WHITE TAPE
4" TIW	TEMPORARY INTERMITTENT WHITE TAPE
4" TSY	TEMPORARY SOLID YELLOW TAPE

NOT TO SCALE

NOTE:
TEMPORARY TRAFFIC CONTROL SHOWN ON COMBINATION PROJECT J6I3110 WILL BE PAID FOR ON THIS PROJECT. J6I3110 TEMPORARY TRAFFIC CONTROL IS FOR INFORMATIONAL USE ONLY.

SHOWN TEMP.TRAFFIC CONTROL SIGNS AND DEVICES TO BE RELOCATED FROM PRIOR STAGE AT NO DIRECT PAY

STATE OF MISSOURI
SHIRLEY J. NORRIS
NUMBER PE-28779
PROFESSIONAL ENGINEER

THIS SHEET HAS BEEN SIGNED, SEALED AND DATED ELECTRONICALLY.

DATE PREPARED	9/29/2016
ROUTE	I-55
STATE	MO
DISTRICT	SL
SHEET NO.	31
COUNTY	JEFFERSON
JOB NO.	J6I3131
CONTRACT ID.	
PROJECT NO.	
BRIDGE NO.	

DATE	DESCRIPTION

IF A SEAL IS PRESENT ON THIS SHEET IT HAS BEEN ELECTRONICALLY SEALED AND DATED.

MISSOURI HIGHWAYS AND TRANSPORTATION COMMISSION
105 WEST CAPITOL
JEFFERSON CITY, MO 65102
1-888-ASK-MODOT (1-888-275-6636)

TRAFFIC CONTROL
STAGE 5A SB

SHEET 26 OF 76

NOTE:
TEMPORARY TRAFFIC CONTROL SHOWN ON COMBINATION PROJECT J6I3110 WILL BE PAID FOR ON THIS PROJECT. J6I3110 TEMPORARY TRAFFIC CONTROL IS FOR INFORMATIONAL USE ONLY.

DISCLAIMER
THE PROFESSIONAL WHOSE SIGNATURE AND PERSONAL SEAL APPEAR HEREON ASSUMES RESPONSIBILITY ONLY FOR WHAT APPEARS ON THIS PAGE, AND DISCLAIMS (PURSUANT TO SECTION 327.411 RSMO) SPECIFICATION, ESTIMATES, REPORTS, OR OTHER DOCUMENTS OR INSTRUMENTS NOT SEALED BY THE UNDERSIGNED PROFESSIONAL RELATING TO OR INTENDED TO BE USED FOR ANY PART OR PARTS OF THE PROJECT TO WHICH THIS PAGE REFERS.

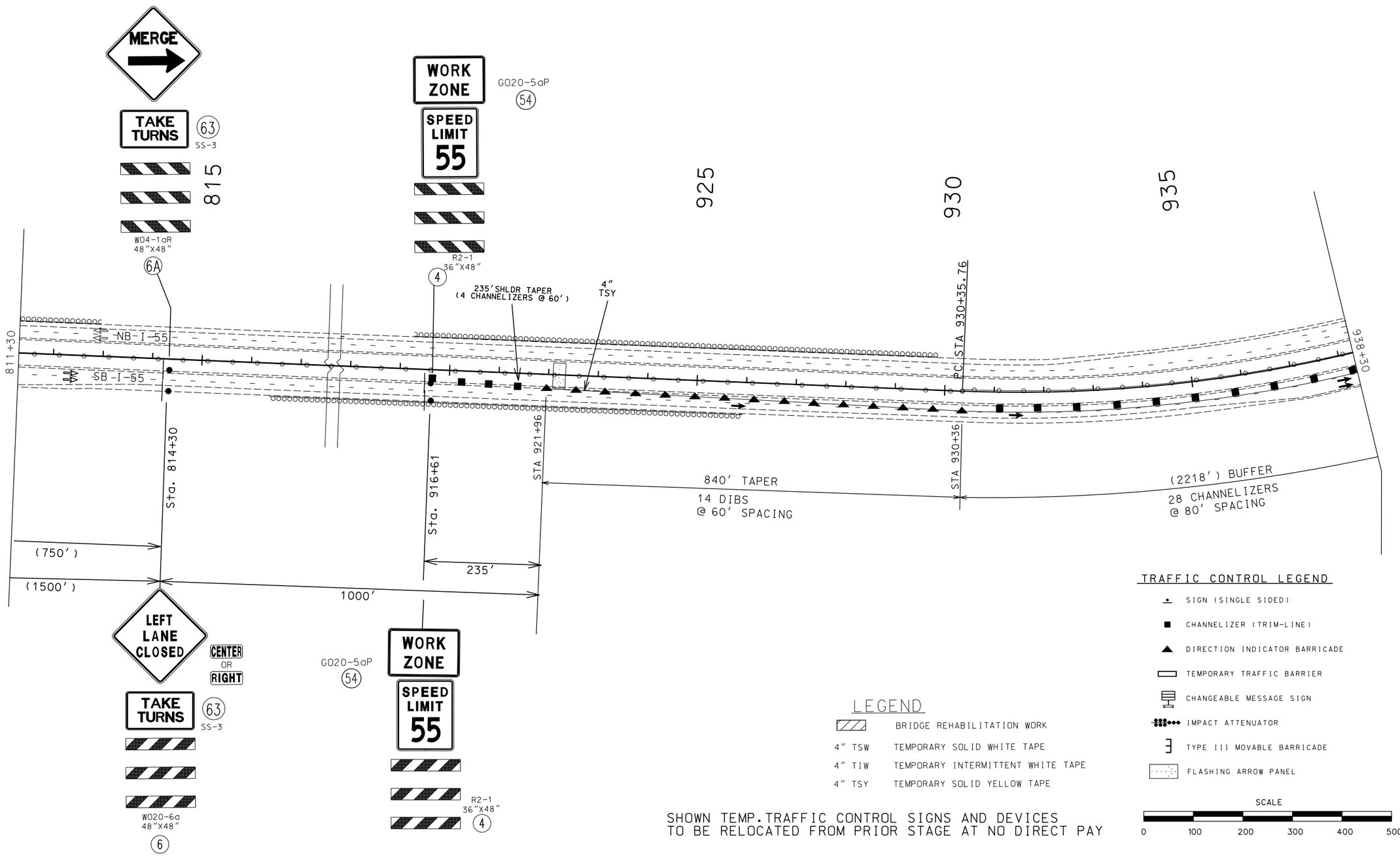

LEGEND

	BRIDGE REHABILITATION WORK
4" TSW	TEMPORARY SOLID WHITE TAPE
4" TIW	TEMPORARY INTERMITTENT WHITE TAPE
4" TSY	TEMPORARY SOLID YELLOW TAPE

TRAFFIC CONTROL LEGEND

- SIGN (SINGLE SIDED)
- CHANNELIZER (TRIM-LINE)
- DIRECTION INDICATOR BARRICADE
- TEMPORARY TRAFFIC BARRIER
- CHANGEABLE MESSAGE SIGN
- IMPACT ATTENUATOR
- TYPE III MOVABLE BARRICADE
- FLASHING ARROW PANEL

SCALE
0 100 200 300 400 500

SHOWN TEMP. TRAFFIC CONTROL SIGNS AND DEVICES TO BE RELOCATED FROM PRIOR STAGE AT NO DIRECT PAY

STATE OF MISSOURI
SHIRLEY J. NORRIS
NUMBER PE-28779
PROFESSIONAL ENGINEER
THIS SHEET HAS BEEN SIGNED, SEALED AND DATED ELECTRONICALLY.

DATE PREPARED	9/29/2016
ROUTE	I-55
STATE	MO
DISTRICT	SL
SHEET NO.	32
COUNTY	JEFFERSON
JOB NO.	J6I3131
CONTRACT ID.	
PROJECT NO.	
BRIDGE NO.	

DESCRIPTION | DATE

IF A SEAL IS PRESENT ON THIS SHEET IT HAS BEEN ELECTRONICALLY SEALED AND DATED.

MISSOURI HIGHWAYS AND TRANSPORTATION COMMISSION
105 WEST CAPITOL
JEFFERSON CITY, MO 65102
1-888-ASK-MODOT (1-888-275-6636)

TRAFFIC CONTROL
STAGE 5A SB
SHEET 27 OF 76

DISCLAIMER
THE PROFESSIONAL WHOSE SIGNATURE AND PERSONAL SEAL APPEAR HEREON ASSUMES RESPONSIBILITY ONLY FOR WHAT APPEARS ON THIS PAGE, AND DISCLAIMS (PURSUANT TO SECTION 327.411 RSMO) SPECIFICATION, ESTIMATES, REPORTS, OR OTHER DOCUMENTS OR INSTRUMENTS NOT SEALED BY THE UNDERSIGNED PROFESSIONAL RELATING TO OR INTENDED TO BE USED FOR ANY PART OR PARTS OF THE PROJECT TO WHICH THIS PAGE REFERS.

TRAFFIC CONTROL LEGEND

- SIGN (SINGLE SIDED)
- CHANNELIZER (TRIM-LINE)
- DIRECTION INDICATOR BARRICADE
- TEMPORARY TRAFFIC BARRIER
- CHANGEABLE MESSAGE SIGN
- IMPACT ATTENUATOR
- TYPE III MOVABLE BARRICADE

LEGEND

4" TSW	TEMPORARY SOLID WHITE TAPE
4" TIW	TEMPORARY INTERMITTENT WHITE TAPE
4" TSY	TEMPORARY SOLID YELLOW TAPE
4" TDS	**TEMPORARY DOTTED WHITE TAPE**

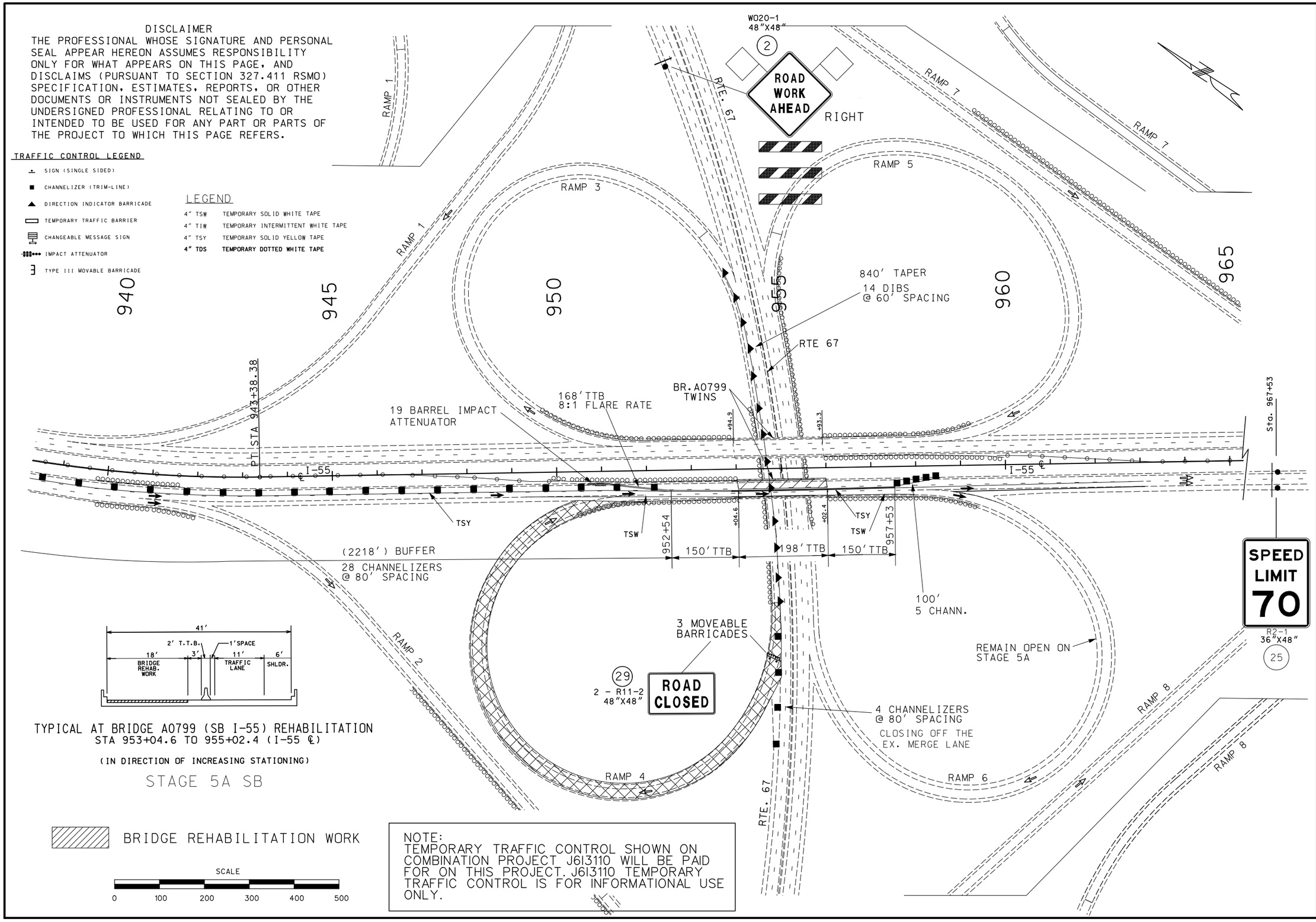

TYPICAL AT BRIDGE A0799 (SB I-55) REHABILITATION
STA 953+04.6 TO 955+02.4 (I-55 ℄)

(IN DIRECTION OF INCREASING STATIONING)

STAGE 5A SB

BRIDGE REHABILITATION WORK

SCALE
0 100 200 300 400 500

NOTE:
TEMPORARY TRAFFIC CONTROL SHOWN ON COMBINATION PROJECT J6I3110 WILL BE PAID FOR ON THIS PROJECT. J6I3110 TEMPORARY TRAFFIC CONTROL IS FOR INFORMATIONAL USE ONLY.

STATE OF MISSOURI
SHIRLEY J. NORRIS
NUMBER PE-28779
PROFESSIONAL ENGINEER
THIS SHEET HAS BEEN SIGNED, SEALED AND DATED ELECTRONICALLY.

DATE PREPARED	9/29/2016
ROUTE	I-55
STATE	MO
DISTRICT	SL
SHEET NO.	33A
COUNTY	JEFFERSON
JOB NO.	J6I3131
CONTRACT ID.	
PROJECT NO.	
BRIDGE NO.	

DATE	DESCRIPTION

IF A SEAL IS PRESENT ON THIS SHEET IT HAS BEEN ELECTRONICALLY SEALED AND DATED.

MISSOURI HIGHWAYS AND TRANSPORTATION COMMISSION
105 WEST CAPITOL
JEFFERSON CITY, MO 65102
1-888-ASK-MODOT (1-888-275-6636)

TRAFFIC CONTROL
STAGE 5A SB

SHEET 28A OF 76

DETOUR FOR ROUTE 67 RAMP 4 CLOSURE DURING STAGE 5A CONSTRUCTION

DISCLAIMER
THE PROFESSIONAL WHOSE SIGNATURE AND PERSONAL SEAL APPEAR HEREON ASSUMES RESPONSIBILITY ONLY FOR WHAT APPEARS ON THIS PAGE, AND DISCLAIMS (PURSUANT TO SECTION 327.411 RSMO) SPECIFICATION, ESTIMATES, REPORTS, OR OTHER DOCUMENTS OR INSTRUMENTS NOT SEALED BY THE UNDERSIGNED PROFESSIONAL RELATING TO OR INTENDED TO BE USED FOR ANY PART OR PARTS OF THE PROJECT TO WHICH THIS PAGE REFERS.

GENERAL NOTES:

1. ANY EXISTING SIGNS THAT CONFLICT WITH THE TRAFFIC CONTROL PLAN SHALL BE COMPLETELY COVERED OR REMOVED.
2. ALL SIGNS SHALL BE GROUND-MOUNTED.
3. ALL DISTANCES AND SPACING OF TRAFFIC CONTROL DEVICES ARE APPROXIMATE AND MAY BE REVISED AS DIRECTED BY THE ENGINEER TO FIT FIELD CONDITIONS.

TRAFFIC CONTROL LEGEND

- SIGN (SINGLE SIDED)
- CHANGEABLE MESSAGE BOARD (WITH 5 CHANNELIZERS)

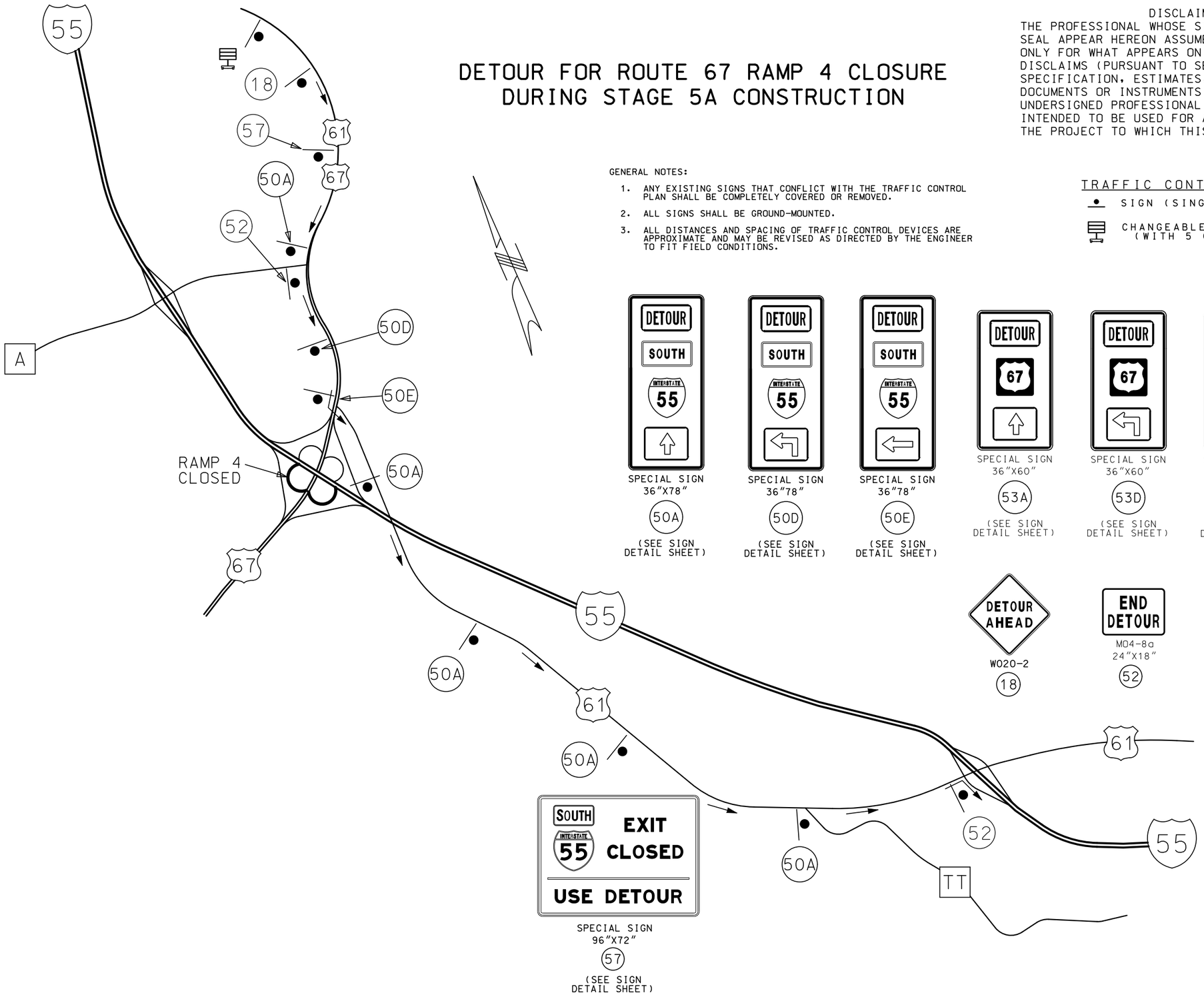

NOT TO SCALE

STATE OF MISSOURI
SHIRLEY J. NORRIS
NUMBER PE-28779
PROFESSIONAL ENGINEER
THIS SHEET HAS BEEN SIGNED, SEALED AND DATED ELECTRONICALLY.

DATE PREPARED	9/29/2016
ROUTE	I-55
STATE	MO
DISTRICT	SL
SHEET NO.	33B
COUNTY	JEFFERSON
JOB NO.	J6I3131
CONTRACT ID.	
PROJECT NO.	
BRIDGE NO.	

DATE	DESCRIPTION

IF A SEAL IS PRESENT ON THIS SHEET IT HAS BEEN ELECTRONICALLY SEALED AND DATED.

MISSOURI HIGHWAYS AND TRANSPORTATION COMMISSION
105 WEST CAPITOL
JEFFERSON CITY, MO 65102
1-888-ASK-MODOT (1-888-275-6636)

TRAFFIC CONTROL
I-55 DETOUR PLAN
STAGE 5A SB
SHEET 28B OF 76

TRAFFIC CONTROL LEGEND

- SIGN (SINGLE SIDED)
- CHANNELIZER (TRIM-LINE)
- DIRECTION INDICATOR BARRICADE
- TEMPORARY TRAFFIC BARRIER
- CHANGEABLE MESSAGE SIGN
- IMPACT ATTENUATOR
- TYPE III MOVABLE BARRICADE

ADD ROAD WORK AHEAD SIGNS WITH ADVANCED WARNING RAIL SYSTEM AT 2 & 5 MILE INTERVAL BEFORE ADVANCED WARNING SIGNS

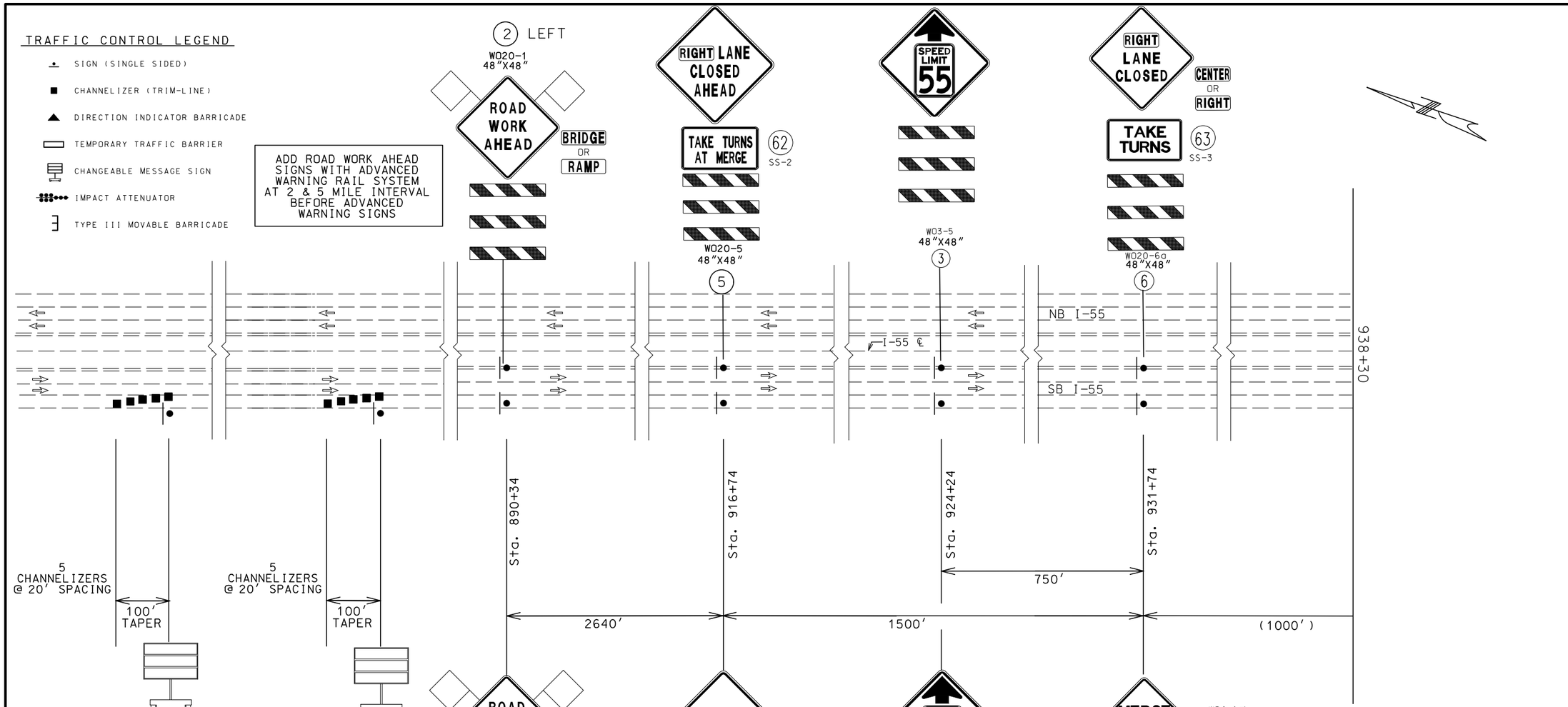

CMS LOCATED BEYOND THE MAXIMUM QUEUE LENGTH.

CMS LOCATED BEYOND THE ESTIMATED QUEUE LENGTH AT THE TIME WHEN SYSTEM ACTIVATION WILL OCCUR.

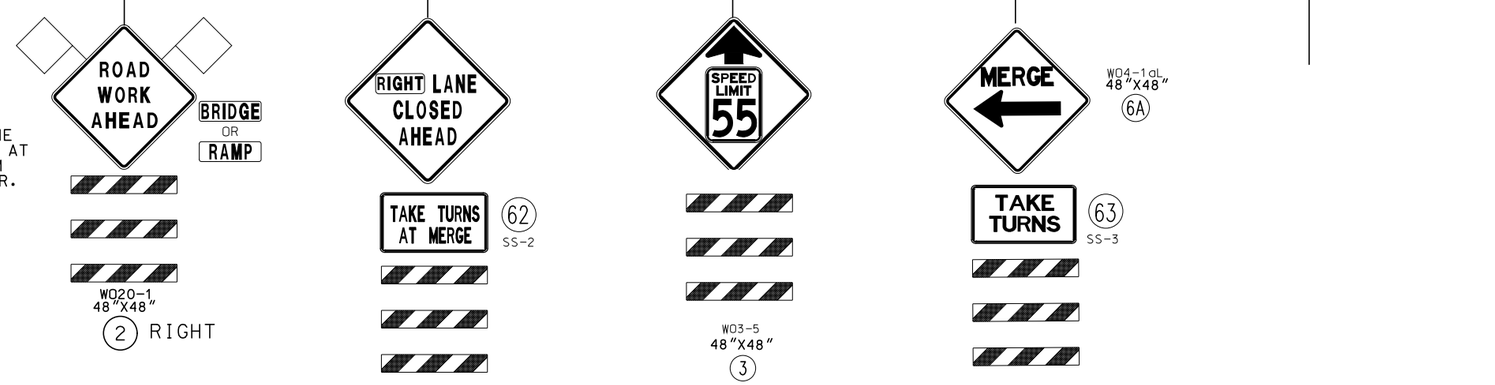

DISCLAIMER

THE PROFESSIONAL WHOSE SIGNATURE AND PERSONAL SEAL APPEAR HEREON ASSUMES RESPONSIBILITY ONLY FOR WHAT APPEARS ON THIS PAGE, AND DISCLAIMS (PURSUANT TO SECTION 327.411 RSMO) SPECIFICATION, ESTIMATES, REPORTS, OR OTHER DOCUMENTS OR INSTRUMENTS NOT SEALED BY THE UNDERSIGNED PROFESSIONAL RELATING TO OR INTENDED TO BE USED FOR ANY PART OR PARTS OF THE PROJECT TO WHICH THIS PAGE REFERS.

NOTE:
TEMPORARY TRAFFIC CONTROL SHOWN ON COMBINATION PROJECT J6I3110 WILL BE PAID FOR ON THIS PROJECT. J6I3110 TEMPORARY TRAFFIC CONTROL IS FOR INFORMATIONAL USE ONLY.

LEGEND

	BRIDGE REHABILITATION WORK
4" TSW	TEMPORARY SOLID WHITE TAPE
4" TIW	TEMPORARY INTERMITTENT WHITE TAPE
4" TSY	TEMPORARY SOLID YELLOW TAPE

SHOWN TEMP. TRAFFIC CONTROL SIGNS AND DEVICES TO BE RELOCATED FROM PRIOR STAGE AT NO DIRECT PAY

NOTE:
SEE TCP SHEET 74 OF 76 FOR DYNAMIC ZIPPER MERGE SYSTEM DETAILS AND SIGNING.

NOT TO SCALE

STATE OF MISSOURI
SHIRLEY J. NORRIS
NUMBER PE-28779
PROFESSIONAL ENGINEER

THIS SHEET HAS BEEN SIGNED, SEALED AND DATED ELECTRONICALLY.

DATE PREPARED	9/29/2016
ROUTE	I-55
STATE	MO
DISTRICT	SL
SHEET NO.	34
COUNTY	JEFFERSON
JOB NO.	J6I3131
CONTRACT ID.	
PROJECT NO.	
BRIDGE NO.	

DATE	DESCRIPTION

IF A SEAL IS PRESENT ON THIS SHEET IT HAS BEEN ELECTRONICALLY SEALED AND DATED.

MISSOURI HIGHWAYS AND TRANSPORTATION COMMISSION
105 WEST CAPITOL
JEFFERSON CITY, MO 65102
1-888-ASK-MODOT (1-888-275-6636)

TRAFFIC CONTROL
STAGE 5B SB

DISCLAIMER
THE PROFESSIONAL WHOSE SIGNATURE AND PERSONAL SEAL APPEAR HEREON ASSUMES RESPONSIBILITY ONLY FOR WHAT APPEARS ON THIS PAGE, AND DISCLAIMS (PURSUANT TO SECTION 327.411 RSMO) SPECIFICATION, ESTIMATES, REPORTS, OR OTHER DOCUMENTS OR INSTRUMENTS NOT SEALED BY THE UNDERSIGNED PROFESSIONAL RELATING TO OR INTENDED TO BE USED FOR ANY PART OR PARTS OF THE PROJECT TO WHICH THIS PAGE REFERS.

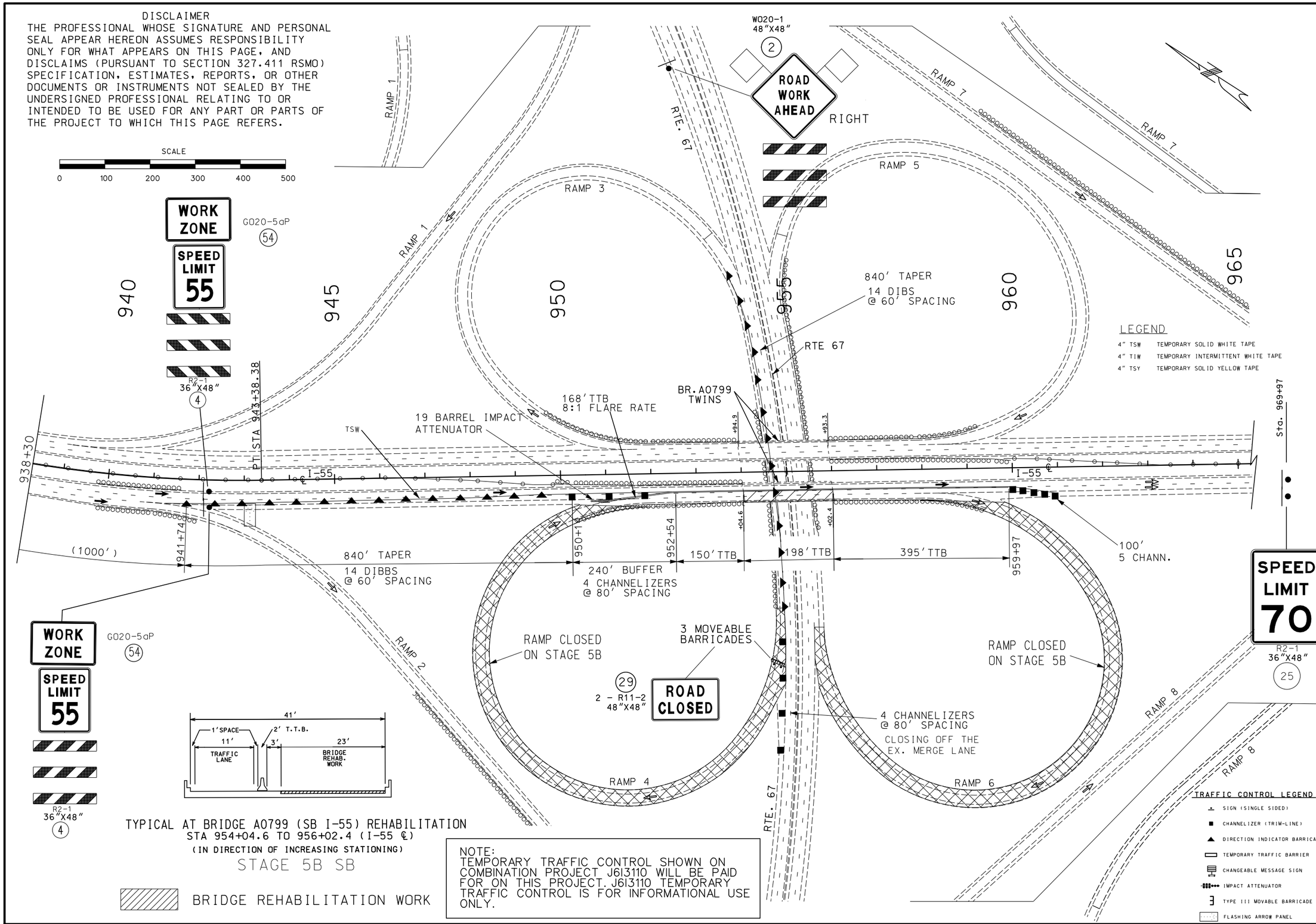

TYPICAL AT BRIDGE A0799 (SB I-55) REHABILITATION
STA 954+04.6 TO 956+02.4 (I-55 ℄)
(IN DIRECTION OF INCREASING STATIONING)
STAGE 5B SB

BRIDGE REHABILITATION WORK

NOTE:
TEMPORARY TRAFFIC CONTROL SHOWN ON COMBINATION PROJECT J6I3110 WILL BE PAID FOR ON THIS PROJECT. J6I3110 TEMPORARY TRAFFIC CONTROL IS FOR INFORMATIONAL USE ONLY.

STATE OF MISSOURI
SHIRLEY J. NORRIS
NUMBER PE-28779
PROFESSIONAL ENGINEER
THIS SHEET HAS BEEN SIGNED, SEALED AND DATED ELECTRONICALLY.

DATE PREPARED	9/29/2016
ROUTE	I-55
STATE	MO
DISTRICT	SL
SHEET NO.	35
COUNTY	JEFFERSON
JOB NO.	J6I3131
CONTRACT ID.	
PROJECT NO.	
BRIDGE NO.	

DESCRIPTION	DATE

MISSOURI HIGHWAYS AND TRANSPORTATION COMMISSION
105 WEST CAPITOL
JEFFERSON CITY, MO 65102
1-888-ASK-MODOT (1-888-275-6636)

IF A SEAL IS PRESENT ON THIS SHEET IT HAS BEEN ELECTRONICALLY SEALED AND DATED.

TRAFFIC CONTROL
STAGE 5B SB

SHEET 30 OF 76

DETOUR FOR SOUTHBOUND I-55 @ ROUTE 67 RAMPS 4 & 6 CLOSURE DURING STAGE 5B CONSTRUCTION

DISCLAIMER
THE PROFESSIONAL WHOSE SIGNATURE AND PERSONAL SEAL APPEAR HEREON ASSUMES RESPONSIBILITY ONLY FOR WHAT APPEARS ON THIS PAGE, AND DISCLAIMS (PURSUANT TO SECTION 327.411 RSMO) SPECIFICATION, ESTIMATES, REPORTS, OR OTHER DOCUMENTS OR INSTRUMENTS NOT SEALED BY THE UNDERSIGNED PROFESSIONAL RELATING TO OR INTENDED TO BE USED FOR ANY PART OR PARTS OF THE PROJECT TO WHICH THIS PAGE REFERS.

GENERAL NOTES:

1. ANY EXISTING SIGNS THAT CONFLICT WITH THE TRAFFIC CONTROL PLAN SHALL BE COMPLETELY COVERED OR REMOVED.
2. ALL SIGNS SHALL BE GROUND-MOUNTED.
3. ALL DISTANCES AND SPACING OF TRAFFIC CONTROL DEVICES ARE APPROXIMATE AND MAY BE REVISED AS DIRECTED BY THE ENGINEER TO FIT FIELD CONDITIONS.

TRAFFIC CONTROL LEGEND

- SIGN (SINGLE SIDED)
- CHANGEABLE MESSAGE BOARD (WITH 5 CHANNELIZERS)

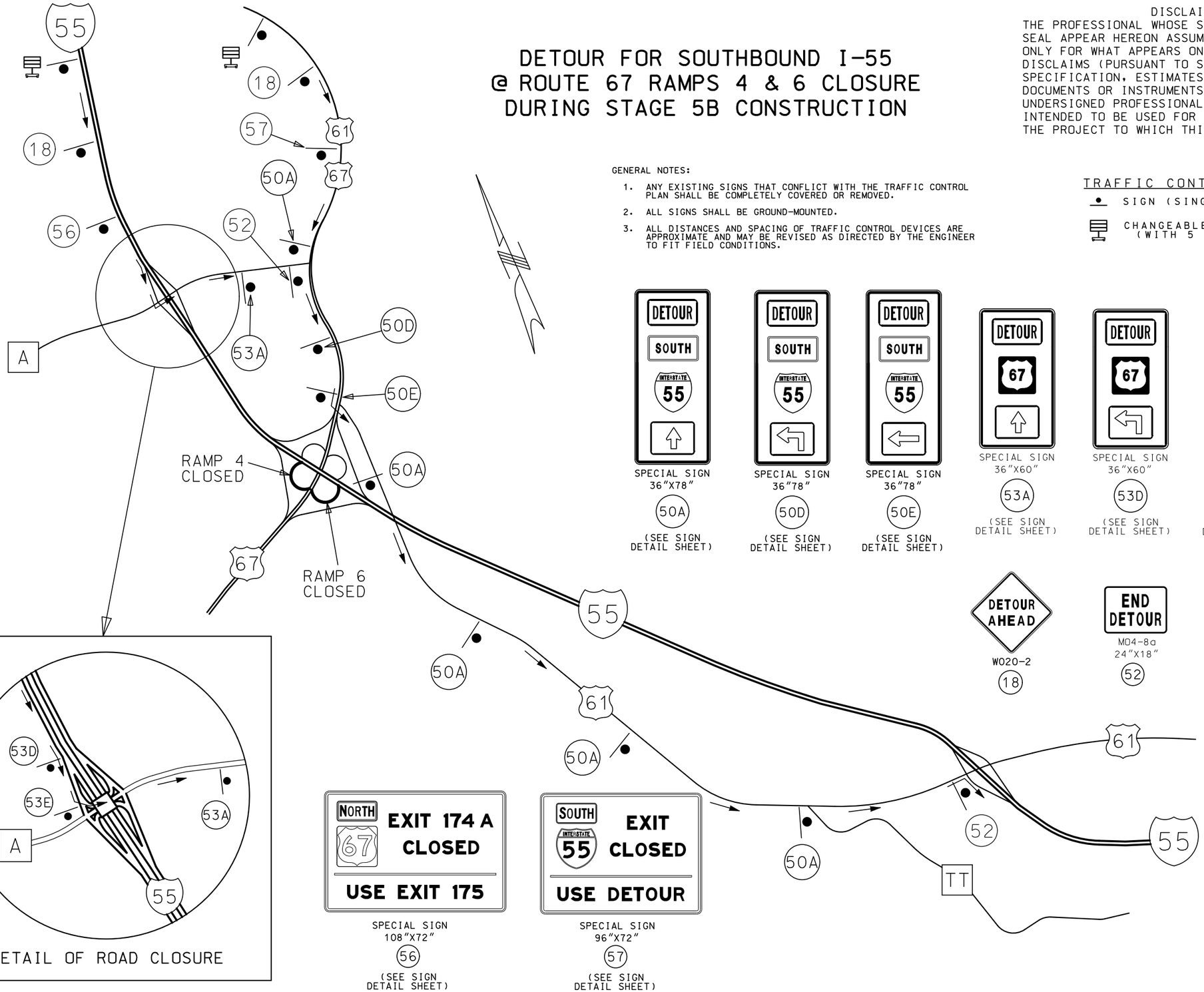

NOT TO SCALE

STATE OF MISSOURI
SHIRLEY J. NORRIS
NUMBER PE-28779
PROFESSIONAL ENGINEER
THIS SHEET HAS BEEN SIGNED, SEALED AND DATED ELECTRONICALLY.

DATE PREPARED	9/29/2016
ROUTE	I-55
STATE	MO
DISTRICT	SL
SHEET NO.	36
COUNTY	JEFFERSON
JOB NO.	J6I3131
CONTRACT ID.	
PROJECT NO.	
BRIDGE NO.	

DATE	DESCRIPTION

IF A SEAL IS PRESENT ON THIS SHEET IT HAS BEEN ELECTRONICALLY SEALED AND DATED.

MISSOURI HIGHWAYS AND TRANSPORTATION COMMISSION
105 WEST CAPITOL
JEFFERSON CITY, MO 65102
1-888-ASK-MODOT (1-888-275-6636)

TRAFFIC CONTROL
I-55 DETOUR PLAN
STAGE 5B SB
SHEET 31 OF 76

TRAFFIC CONTROL LEGEND

- SIGN (SINGLE SIDED)
- CHANNELIZER (TRIM-LINE)
- DIRECTION INDICATOR BARRICADE
- TEMPORARY TRAFFIC BARRIER
- CHANGEABLE MESSAGE SIGN
- IMPACT ATTENUATOR
- TYPE III MOVABLE BARRICADE
- FLASHING ARROW PANEL

ADD ROAD WORK AHEAD SIGNS WITH ADVANCED WARNING RAIL SYSTEM AT 2 & 5 MILE INTERVAL BEFORE ADVANCED WARNING SIGNS

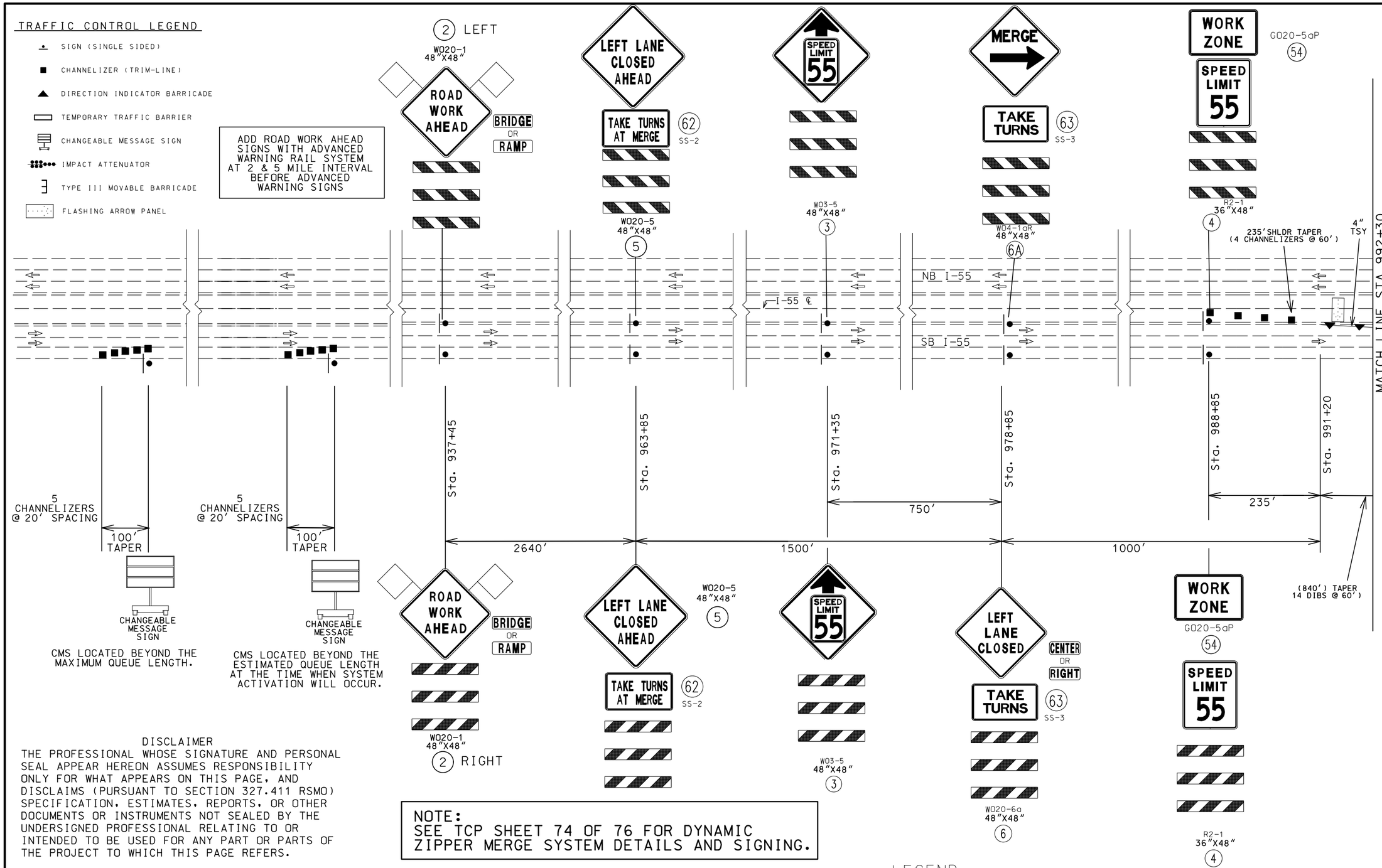

DISCLAIMER

THE PROFESSIONAL WHOSE SIGNATURE AND PERSONAL SEAL APPEAR HEREON ASSUMES RESPONSIBILITY ONLY FOR WHAT APPEARS ON THIS PAGE, AND DISCLAIMS (PURSUANT TO SECTION 327.411 RSMO) SPECIFICATION, ESTIMATES, REPORTS, OR OTHER DOCUMENTS OR INSTRUMENTS NOT SEALED BY THE UNDERSIGNED PROFESSIONAL RELATING TO OR INTENDED TO BE USED FOR ANY PART OR PARTS OF THE PROJECT TO WHICH THIS PAGE REFERS.

NOTE:
SEE TCP SHEET 74 OF 76 FOR DYNAMIC ZIPPER MERGE SYSTEM DETAILS AND SIGNING.

NOTE:
TEMPORARY TRAFFIC CONTROL SHOWN ON COMBINATION PROJECT J6I3110 WILL BE PAID FOR ON THIS PROJECT. J6I3110 TEMPORARY TRAFFIC CONTROL IS FOR INFORMATIONAL USE ONLY.

NOTE:
SB I-55 OVER RAILROAD BRIDGE AND PLATTIN CREEK BRIDGE CAN BE STAGED FOR ONE BRIDGE RESURFACING AT A TIME AT DIRECTION OF ENGINEER

SHOWN TEMP. TRAFFIC CONTROL SIGNS AND DEVICES TO BE RELOCATED FROM PRIOR STAGE AT NO DIRECT PAY

LEGEND

▨	BRIDGE REHABILITATION WORK
4" TSW	TEMPORARY SOLID WHITE TAPE
4" TIW	TEMPORARY INTERMITTENT WHITE TAPE
4" TSY	TEMPORARY SOLID YELLOW TAPE

NOT TO SCALE

STATE OF MISSOURI
SHIRLEY J. NORRIS
NUMBER PE-28779
PROFESSIONAL ENGINEER

THIS SHEET HAS BEEN SIGNED, SEALED AND DATED ELECTRONICALLY.

DATE PREPARED	
9/29/2016	
ROUTE	STATE
I-55	MO
DISTRICT	SHEET NO.
SL	37
COUNTY	
JEFFERSON	
JOB NO.	
J6I3131	
CONTRACT ID.	
PROJECT NO.	
BRIDGE NO.	

DATE	DESCRIPTION

IF A SEAL IS PRESENT ON THIS SHEET IT HAS BEEN ELECTRONICALLY SEALED AND DATED.

MISSOURI HIGHWAYS AND TRANSPORTATION COMMISSION
105 WEST CAPITOL
JEFFERSON CITY, MO 65102
1-888-ASK-MODOT (1-888-275-6636)

TRAFFIC CONTROL

STAGE 6A SB

SHEET 32 OF 76

NOTE:
SB I-55 OVER RAILROAD BRIDGE AND PLATTIN CREEK BRIDGE CAN BE STAGED FOR ONE BRIDGE RESURFACING AT A TIME AT DIRECTION OF ENGINEER

TRAFFIC CONTROL LEGEND

- SIGN (SINGLE SIDED)
- CHANNELIZER (TRIM-LINE)
- DIRECTION INDICATOR BARRICADE
- TEMPORARY TRAFFIC BARRIER
- CHANGEABLE MESSAGE SIGN
- IMPACT ATTENUATOR
- TYPE III MOVABLE BARRICADE

DISCLAIMER
THE PROFESSIONAL WHOSE SIGNATURE AND PERSONAL SEAL APPEAR HEREON ASSUMES RESPONSIBILITY ONLY FOR WHAT APPEARS ON THIS PAGE, AND DISCLAIMS (PURSUANT TO SECTION 327.411 RSMO) SPECIFICATION, ESTIMATES, REPORTS, OR OTHER DOCUMENTS OR INSTRUMENTS NOT SEALED BY THE UNDERSIGNED PROFESSIONAL RELATING TO OR INTENDED TO BE USED FOR ANY PART OR PARTS OF THE PROJECT TO WHICH THIS PAGE REFERS.

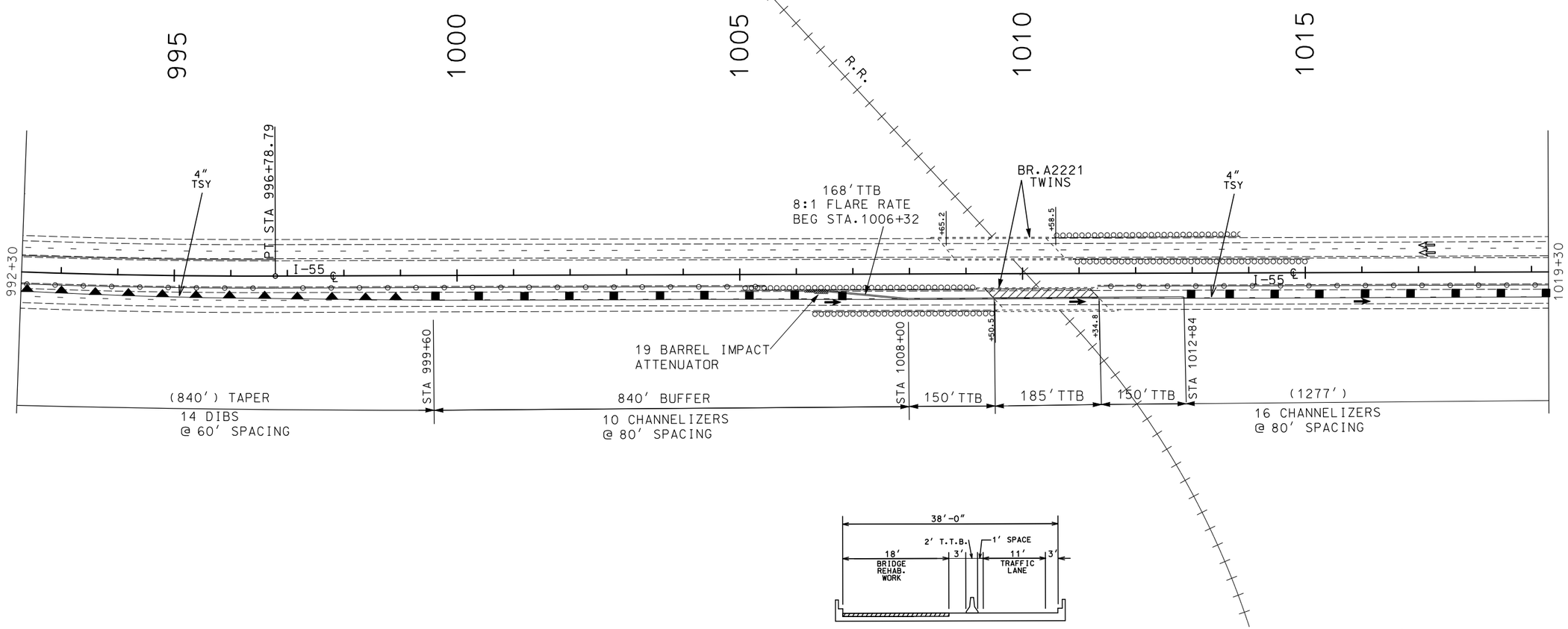

TYPICAL AT BRIDGE A2221 (SB I-55) REHABILITATION
STA 1009+50.5 TO 1011+34.8 (I-55 ℄)

(IN DIRECTION OF INCREASING STATIONING)

STAGE 6A SB

NOTE:
TEMPORARY TRAFFIC CONTROL SHOWN ON COMBINATION PROJECT J6I3110 WILL BE PAID FOR ON THIS PROJECT. J6I3110 TEMPORARY TRAFFIC CONTROL IS FOR INFORMATIONAL USE ONLY.

LEGEND

	BRIDGE REHABILITATION WORK
4" TSW	TEMPORARY SOLID WHITE TAPE
4" TIW	TEMPORARY INTERMITTENT WHITE TAPE
4" TSY	TEMPORARY SOLID YELLOW TAPE

SHOWN TEMP. TRAFFIC CONTROL SIGNS AND DEVICES TO BE RELOCATED FROM PRIOR STAGE AT NO DIRECT PAY

SCALE
0 100 200 300 400 500

STATE OF MISSOURI
SHIRLEY J. NORRIS
NUMBER PE-28779
PROFESSIONAL ENGINEER
THIS SHEET HAS BEEN SIGNED, SEALED AND DATED ELECTRONICALLY.

DATE PREPARED	9/29/2016
ROUTE	I-55
STATE	MO
DISTRICT	SL
SHEET NO.	38
COUNTY	JEFFERSON
JOB NO.	J6I3131
CONTRACT ID.	
PROJECT NO.	
BRIDGE NO.	

DATE	DESCRIPTION

IF A SEAL IS PRESENT ON THIS SHEET IT HAS BEEN ELECTRONICALLY SEALED AND DATED.

MISSOURI HIGHWAYS AND TRANSPORTATION COMMISSION
105 WEST CAPITOL
JEFFERSON CITY, MO 65102
1-888-ASK-MODOT (1-888-275-6636)

TRAFFIC CONTROL
STAGE 6A SB

SHEET 33 OF 76

NOTE:
SB I-55 OVER RAILROAD BRIDGE AND PLATTIN CREEK BRIDGE CAN BE STAGED FOR ONE BRIDGE RESURFACING AT A TIME AT DIRECTION OF ENGINEER

TRAFFIC CONTROL LEGEND

- SIGN (SINGLE SIDED)
- CHANNELIZER (TRIM-LINE)
- DIRECTION INDICATOR BARRICADE
- TEMPORARY TRAFFIC BARRIER
- CHANGEABLE MESSAGE SIGN
- IMPACT ATTENUATOR
- TYPE III MOVABLE BARRICADE

DISCLAIMER
THE PROFESSIONAL WHOSE SIGNATURE AND PERSONAL SEAL APPEAR HEREON ASSUMES RESPONSIBILITY ONLY FOR WHAT APPEARS ON THIS PAGE, AND DISCLAIMS (PURSUANT TO SECTION 327.411 RSMO) SPECIFICATION, ESTIMATES, REPORTS, OR OTHER DOCUMENTS OR INSTRUMENTS NOT SEALED BY THE UNDERSIGNED PROFESSIONAL RELATING TO OR INTENDED TO BE USED FOR ANY PART OR PARTS OF THE PROJECT TO WHICH THIS PAGE REFERS.

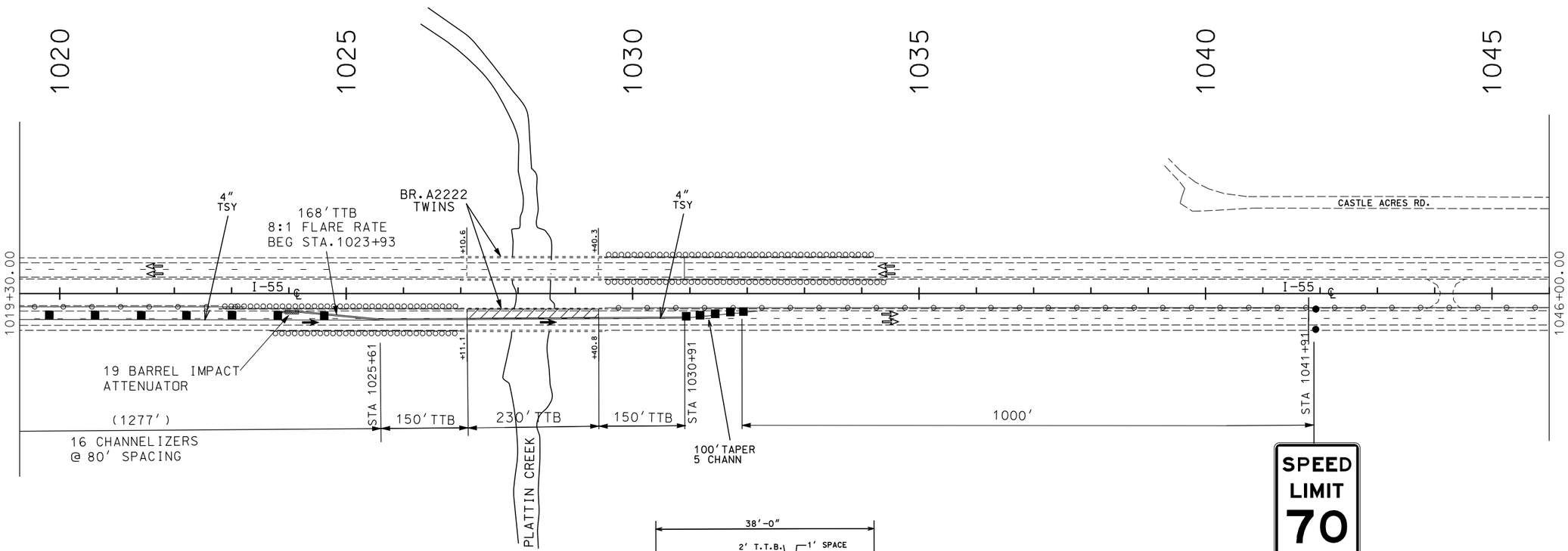

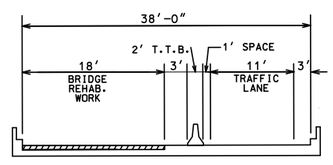

TYPICAL AT BRIDGE A2222 (SB I-55) REHABILITATION
STA 1027+11.1 TO 1029+40.8 (I-55 ℄)

(IN DIRECTION OF INCREASING STATIONING)

STAGE 6A SB

LEGEND

▨	BRIDGE REHABILITATION WORK
4" TSW	TEMPORARY SOLID WHITE TAPE
4" TIW	TEMPORARY INTERMITTENT WHITE TAPE
4" TSY	TEMPORARY SOLID YELLOW TAPE

SCALE
0 100 200 300 400 500

NOTE:
TEMPORARY TRAFFIC CONTROL SHOWN ON COMBINATION PROJECT J6I3110 WILL BE PAID FOR ON THIS PROJECT. J6I3110 TEMPORARY TRAFFIC CONTROL IS FOR INFORMATIONAL USE ONLY.

SHOWN TEMP.TRAFFIC CONTROL SIGNS AND DEVICES TO BE RELOCATED FROM PRIOR STAGE AT NO DIRECT PAY

STATE OF MISSOURI
SHIRLEY J. NORRIS
NUMBER PE-28779
PROFESSIONAL ENGINEER
THIS SHEET HAS BEEN SIGNED, SEALED AND DATED ELECTRONICALLY.

DATE PREPARED	9/29/2016
ROUTE	I-55
STATE	MO
DISTRICT	SL
SHEET NO.	39
COUNTY	JEFFERSON
JOB NO.	J6I3131
CONTRACT ID.	
PROJECT NO.	
BRIDGE NO.	

DATE	DESCRIPTION

IF A SEAL IS PRESENT ON THIS SHEET IT HAS BEEN ELECTRONICALLY SEALED AND DATED.

MISSOURI HIGHWAYS AND TRANSPORTATION COMMISSION
105 WEST CAPITOL
JEFFERSON CITY, MO 65102
1-888-ASK-MODOT (1-888-275-6636)

TRAFFIC CONTROL
STAGE 6A SB

SHEET 34 OF 76

TRAFFIC CONTROL LEGEND

- SIGN (SINGLE SIDED)
- CHANNELIZER (TRIM-LINE)
- DIRECTION INDICATOR BARRICADE
- TEMPORARY TRAFFIC BARRIER
- CHANGEABLE MESSAGE SIGN
- IMPACT ATTENUATOR
- TYPE III MOVABLE BARRICADE
- FLASHING ARROW PANEL

ADD ROAD WORK AHEAD SIGNS WITH ADVANCED WARNING RAIL SYSTEM AT 2 & 5 MILE INTERVAL BEFORE ADVANCED WARNING SIGNS

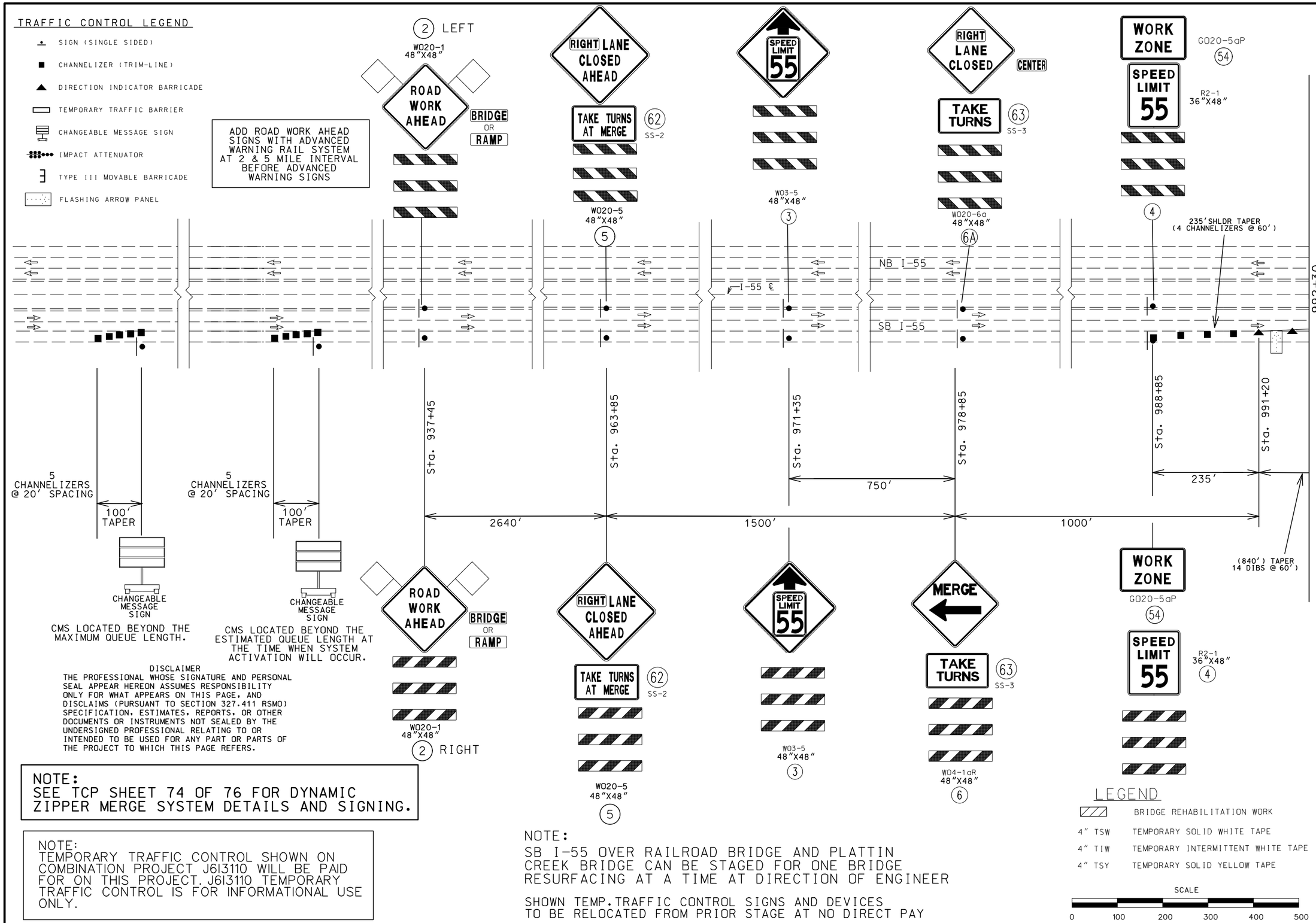

CMS LOCATED BEYOND THE MAXIMUM QUEUE LENGTH.

CMS LOCATED BEYOND THE ESTIMATED QUEUE LENGTH AT THE TIME WHEN SYSTEM ACTIVATION WILL OCCUR.

DISCLAIMER
THE PROFESSIONAL WHOSE SIGNATURE AND PERSONAL SEAL APPEAR HEREON ASSUMES RESPONSIBILITY ONLY FOR WHAT APPEARS ON THIS PAGE, AND DISCLAIMS (PURSUANT TO SECTION 327.411 RSMO) SPECIFICATION, ESTIMATES, REPORTS, OR OTHER DOCUMENTS OR INSTRUMENTS NOT SEALED BY THE UNDERSIGNED PROFESSIONAL RELATING TO OR INTENDED TO BE USED FOR ANY PART OR PARTS OF THE PROJECT TO WHICH THIS PAGE REFERS.

NOTE:
SEE TCP SHEET 74 OF 76 FOR DYNAMIC ZIPPER MERGE SYSTEM DETAILS AND SIGNING.

NOTE:
TEMPORARY TRAFFIC CONTROL SHOWN ON COMBINATION PROJECT J6I3110 WILL BE PAID FOR ON THIS PROJECT. J6I3110 TEMPORARY TRAFFIC CONTROL IS FOR INFORMATIONAL USE ONLY.

NOTE:
SB I-55 OVER RAILROAD BRIDGE AND PLATTIN CREEK BRIDGE CAN BE STAGED FOR ONE BRIDGE RESURFACING AT A TIME AT DIRECTION OF ENGINEER

SHOWN TEMP. TRAFFIC CONTROL SIGNS AND DEVICES TO BE RELOCATED FROM PRIOR STAGE AT NO DIRECT PAY

LEGEND

	BRIDGE REHABILITATION WORK
4" TSW	TEMPORARY SOLID WHITE TAPE
4" TIW	TEMPORARY INTERMITTENT WHITE TAPE
4" TSY	TEMPORARY SOLID YELLOW TAPE

SCALE
0 100 200 300 400 500

STATE OF MISSOURI
SHIRLEY J. NORRIS
NUMBER PE-28779
PROFESSIONAL ENGINEER
THIS SHEET HAS BEEN SIGNED, SEALED AND DATED ELECTRONICALLY.

DATE PREPARED	9/29/2016
ROUTE	I-55
STATE	MO
DISTRICT	SL
SHEET NO.	40
COUNTY	JEFFERSON
JOB NO.	J6I3131
CONTRACT ID.	
PROJECT NO.	
BRIDGE NO.	

DESCRIPTION
DATE

IF A SEAL IS PRESENT ON THIS SHEET IT HAS BEEN ELECTRONICALLY SEALED AND DATED.

MISSOURI HIGHWAYS AND TRANSPORTATION COMMISSION
105 WEST CAPITOL
JEFFERSON CITY, MO 65102
1-888-ASK-MODOT (1-888-275-6636)

TRAFFIC CONTROL
STAGE 6B SB

SHEET 35 OF 76

NOTE:
SB I-55 OVER RAILROAD BRIDGE AND PLATTIN CREEK BRIDGE CAN BE STAGED FOR ONE BRIDGE RESURFACING AT A TIME AT DIRECTION OF ENGINEER

TRAFFIC CONTROL LEGEND

- SIGN (SINGLE SIDED)
- CHANNELIZER (TRIM-LINE)
- DIRECTION INDICATOR BARRICADE
- TEMPORARY TRAFFIC BARRIER
- CHANGEABLE MESSAGE SIGN
- IMPACT ATTENUATOR
- TYPE III MOVABLE BARRICADE

DISCLAIMER
THE PROFESSIONAL WHOSE SIGNATURE AND PERSONAL SEAL APPEAR HEREON ASSUMES RESPONSIBILITY ONLY FOR WHAT APPEARS ON THIS PAGE, AND DISCLAIMS (PURSUANT TO SECTION 327.411 RSMO) SPECIFICATION, ESTIMATES, REPORTS, OR OTHER DOCUMENTS OR INSTRUMENTS NOT SEALED BY THE UNDERSIGNED PROFESSIONAL RELATING TO OR INTENDED TO BE USED FOR ANY PART OR PARTS OF THE PROJECT TO WHICH THIS PAGE REFERS.

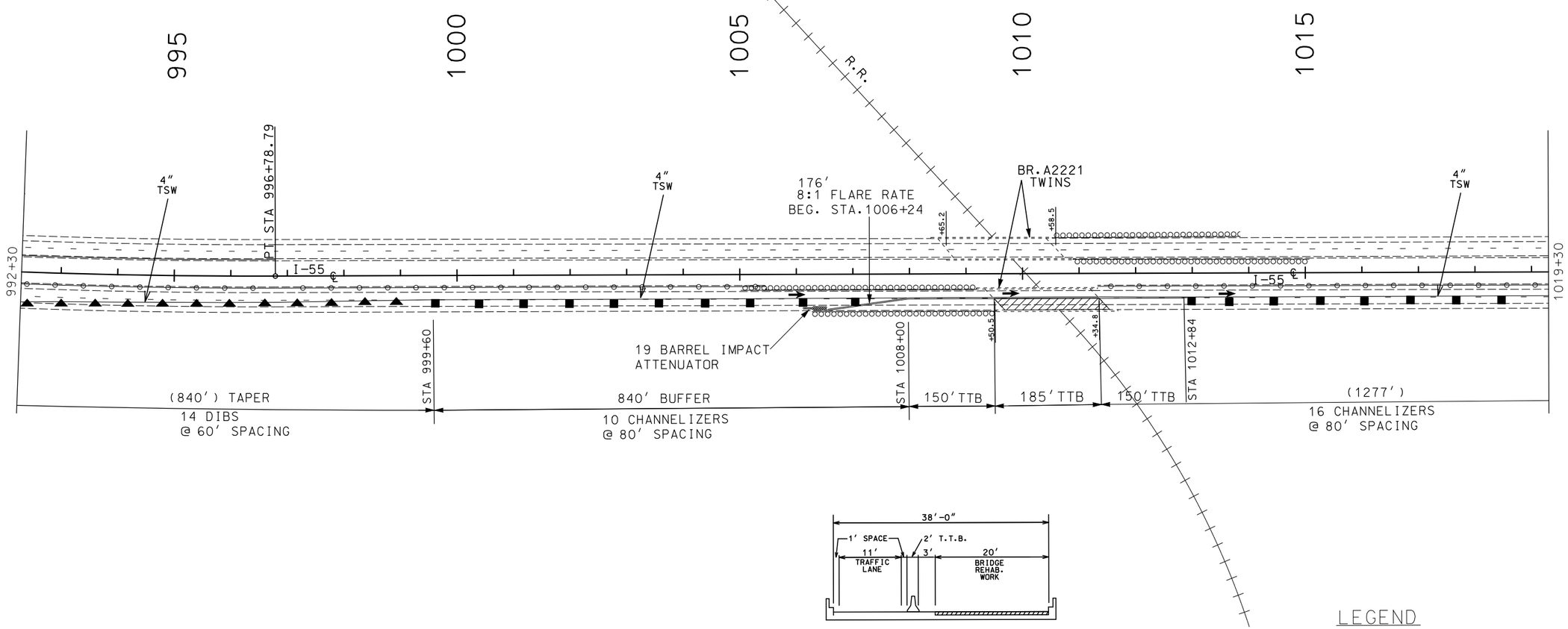

TYPICAL AT BRIDGE A2221 (SB I-55) REHABILITATION
STA 1009+50.5 TO 1011+34.8 (I-55 ℄)

(IN DIRECTION OF INCREASING STATIONING)

STAGE 6B SB

LEGEND

	BRIDGE REHABILITATION WORK
4" TSW	TEMPORARY SOLID WHITE TAPE
4" TIW	TEMPORARY INTERMITTENT WHITE TAPE
4" TSY	TEMPORARY SOLID YELLOW TAPE

NOTE:
TEMPORARY TRAFFIC CONTROL SHOWN ON COMBINATION PROJECT J6I3110 WILL BE PAID FOR ON THIS PROJECT. J6I3110 TEMPORARY TRAFFIC CONTROL IS FOR INFORMATIONAL USE ONLY.

NOTE:
SHOWN TEMP.TRAFFIC CONTROL SIGNS AND DEVICES TO BE RELOCATED FROM PRIOR STAGE AT NO DIRECT PAY

SCALE
0 100 200 300 400 500

STATE OF MISSOURI
SHIRLEY J. NORRIS
NUMBER PE-28779
PROFESSIONAL ENGINEER
THIS SHEET HAS BEEN SIGNED, SEALED AND DATED ELECTRONICALLY.

DATE PREPARED	9/29/2016
ROUTE	I-55
STATE	MO
DISTRICT	SL
SHEET NO.	41
COUNTY	JEFFERSON
JOB NO.	J6I3131
CONTRACT ID.	
PROJECT NO.	
BRIDGE NO.	

DESCRIPTION
DATE

IF A SEAL IS PRESENT ON THIS SHEET IT HAS BEEN ELECTRONICALLY SEALED AND DATED.

MISSOURI HIGHWAYS AND TRANSPORTATION COMMISSION
105 WEST CAPITOL
JEFFERSON CITY, MO 65102
1-888-ASK-MODOT (1-888-275-6636)

TRAFFIC CONTROL
STAGE 6B SB

SHEET 36 OF 76

NOTE:
SB I-55 OVER RAILROAD BRIDGE AND PLATTIN CREEK BRIDGE CAN BE STAGED FOR ONE BRIDGE RESURFACING AT A TIME AT DIRECTION OF ENGINEER

TRAFFIC CONTROL LEGEND

- SIGN (SINGLE SIDED)
- CHANNELIZER (TRIM-LINE)
- DIRECTION INDICATOR BARRICADE
- TEMPORARY TRAFFIC BARRIER
- CHANGEABLE MESSAGE SIGN
- IMPACT ATTENUATOR
- TYPE III MOVABLE BARRICADE

DISCLAIMER
THE PROFESSIONAL WHOSE SIGNATURE AND PERSONAL SEAL APPEAR HEREON ASSUMES RESPONSIBILITY ONLY FOR WHAT APPEARS ON THIS PAGE, AND DISCLAIMS (PURSUANT TO SECTION 327.411 RSMO) SPECIFICATION, ESTIMATES, REPORTS, OR OTHER DOCUMENTS OR INSTRUMENTS NOT SEALED BY THE UNDERSIGNED PROFESSIONAL RELATING TO OR INTENDED TO BE USED FOR ANY PART OR PARTS OF THE PROJECT TO WHICH THIS PAGE REFERS.

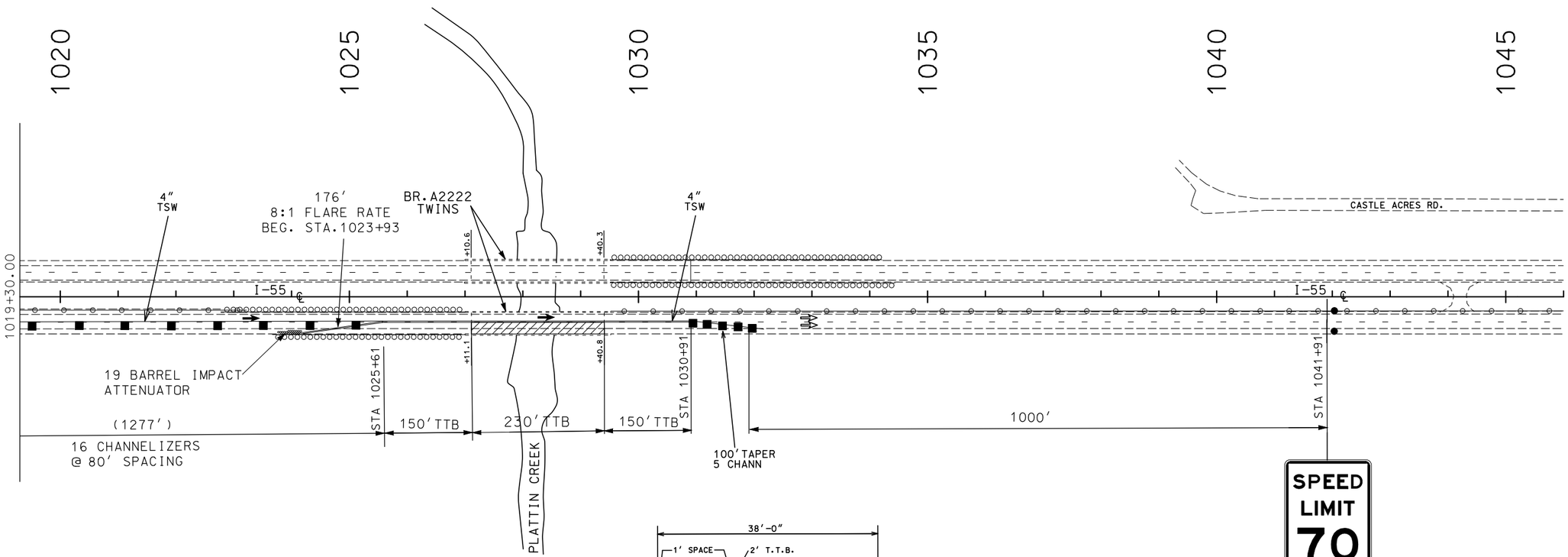

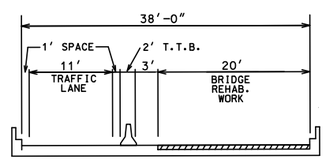

TYPICAL AT BRIDGE A2222 (SB I-55) REHABILITATION
STA 1027+11.1 TO 1029+40.8 (I-55 ℄)

(IN DIRECTION OF INCREASING STATIONING)

STAGE 6B SB

NOTE:
TEMPORARY TRAFFIC CONTROL SHOWN ON COMBINATION PROJECT J6I3110 WILL BE PAID FOR ON THIS PROJECT. J6I3110 TEMPORARY TRAFFIC CONTROL IS FOR INFORMATIONAL USE ONLY.

SHOWN TEMP. TRAFFIC CONTROL SIGNS AND DEVICES TO BE RELOCATED FROM PRIOR STAGE AT NO DIRECT PAY

LEGEND

▨	BRIDGE REHABILITATION WORK
4" TSW	TEMPORARY SOLID WHITE TAPE
4" TIW	TEMPORARY INTERMITTENT WHITE TAPE
4" TSY	TEMPORARY SOLID YELLOW TAPE

SCALE
0 100 200 300 400 500

STATE OF MISSOURI
SHIRLEY J. NORRIS
NUMBER PE-28779
PROFESSIONAL ENGINEER
THIS SHEET HAS BEEN SIGNED, SEALED AND DATED ELECTRONICALLY.

DATE PREPARED	9/29/2016
ROUTE	I-55
STATE	MO
DISTRICT	SL
SHEET NO.	42
COUNTY	JEFFERSON
JOB NO.	J6I3131
CONTRACT ID.	
PROJECT NO.	
BRIDGE NO.	

DESCRIPTION
DATE

MISSOURI HIGHWAYS AND TRANSPORTATION COMMISSION
105 WEST CAPITOL
JEFFERSON CITY, MO 65102
1-888-ASK-MODOT (1-888-275-6636)

IF A SEAL IS PRESENT ON THIS SHEET IT HAS BEEN ELECTRONICALLY SEALED AND DATED.

TRAFFIC CONTROL
STAGE 6B SB

SHEET 37 OF 76

TRAFFIC CONTROL LEGEND

- SIGN (SINGLE SIDED)
- CHANNELIZER (TRIM-LINE)
- DIRECTION INDICATOR BARRICADE
- TEMPORARY TRAFFIC BARRIER
- CHANGEABLE MESSAGE SIGN
- IMPACT ATTENUATOR
- TYPE III MOVABLE BARRICADE
- FLASHING ARROW PANEL

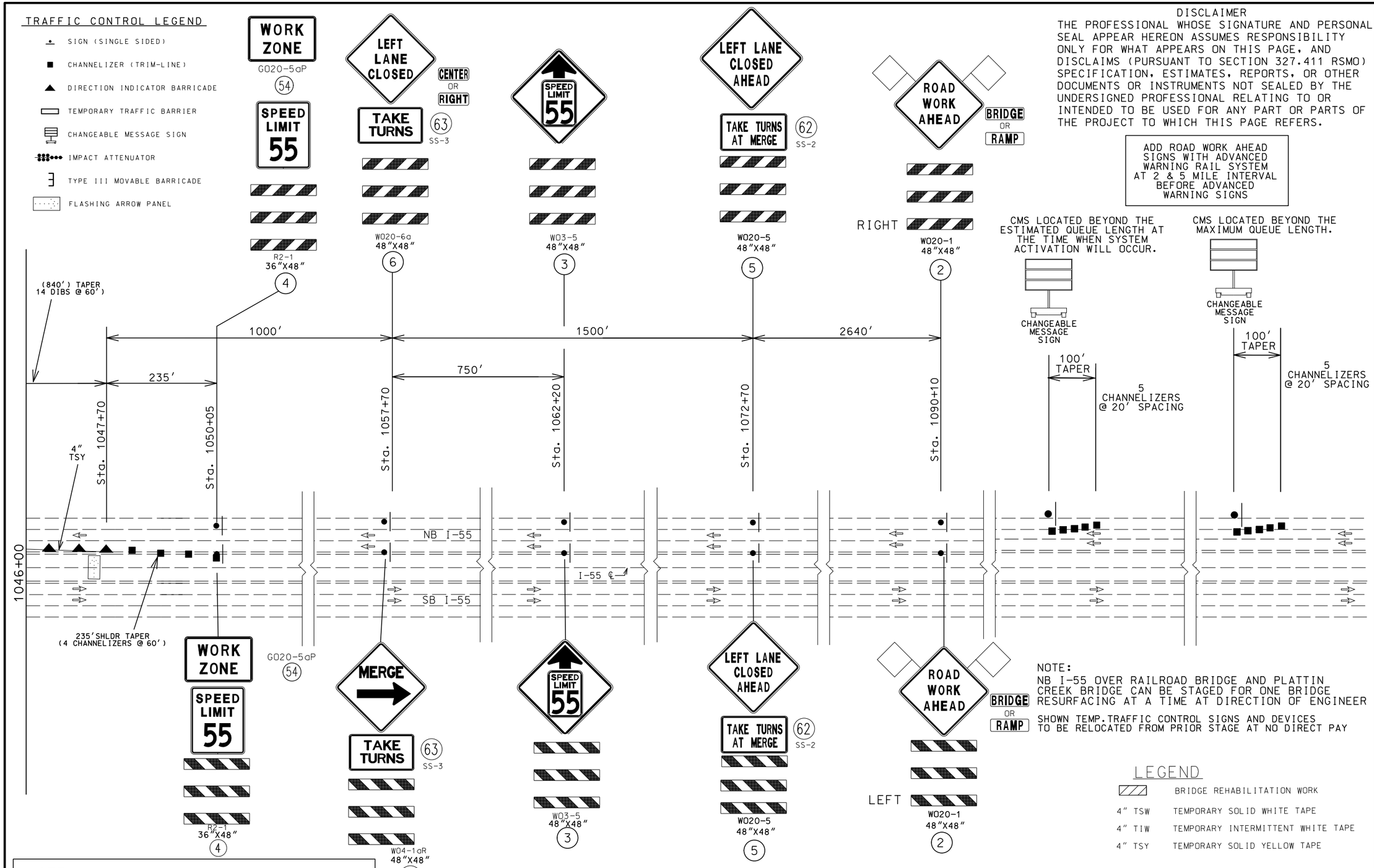

DISCLAIMER

THE PROFESSIONAL WHOSE SIGNATURE AND PERSONAL SEAL APPEAR HEREON ASSUMES RESPONSIBILITY ONLY FOR WHAT APPEARS ON THIS PAGE, AND DISCLAIMS (PURSUANT TO SECTION 327.411 RSMO) SPECIFICATION, ESTIMATES, REPORTS, OR OTHER DOCUMENTS OR INSTRUMENTS NOT SEALED BY THE UNDERSIGNED PROFESSIONAL RELATING TO OR INTENDED TO BE USED FOR ANY PART OR PARTS OF THE PROJECT TO WHICH THIS PAGE REFERS.

ADD ROAD WORK AHEAD SIGNS WITH ADVANCED WARNING RAIL SYSTEM AT 2 & 5 MILE INTERVAL BEFORE ADVANCED WARNING SIGNS

NOTE:
NB I-55 OVER RAILROAD BRIDGE AND PLATTIN CREEK BRIDGE CAN BE STAGED FOR ONE BRIDGE RESURFACING AT A TIME AT DIRECTION OF ENGINEER

BRIDGE OR RAMP SHOWN TEMP. TRAFFIC CONTROL SIGNS AND DEVICES TO BE RELOCATED FROM PRIOR STAGE AT NO DIRECT PAY

LEGEND

	BRIDGE REHABILITATION WORK
4" TSW	TEMPORARY SOLID WHITE TAPE
4" TIW	TEMPORARY INTERMITTENT WHITE TAPE
4" TSY	TEMPORARY SOLID YELLOW TAPE

NOTE:
TEMPORARY TRAFFIC CONTROL SHOWN ON COMBINATION PROJECT J6I3110 WILL BE PAID FOR ON THIS PROJECT. J6I3110 TEMPORARY TRAFFIC CONTROL IS FOR INFORMATIONAL USE ONLY.

NOTE:
SEE TCP SHEET 74 OF 76 FOR DYNAMIC ZIPPER MERGE SYSTEM DETAILS AND SIGNING.

NOT TO SCALE

STATE OF MISSOURI
SHIRLEY J. NORRIS
NUMBER PE-28779
PROFESSIONAL ENGINEER
THIS SHEET HAS BEEN SIGNED, SEALED AND DATED ELECTRONICALLY.

DATE PREPARED	9/29/2016
ROUTE	I-55
STATE	MO
DISTRICT	SL
SHEET NO.	43
COUNTY	JEFFERSON
JOB NO.	J6I3131
CONTRACT ID.	
PROJECT NO.	
BRIDGE NO.	

DESCRIPTION

DATE

MISSOURI HIGHWAYS AND TRANSPORTATION COMMISSION
105 WEST CAPITOL
JEFFERSON CITY, MO 65102
1-888-ASK-MODOT (1-888-275-6636)

IF A SEAL IS PRESENT ON THIS SHEET IT HAS BEEN ELECTRONICALLY SEALED AND DATED.

TRAFFIC CONTROL

STAGE 1A NB

SHEET 38 OF 76

NOTE:
SB I-55 OVER RAILROAD BRIDGE AND PLATTIN CREEK BRIDGE CAN BE STAGED FOR ONE BRIDGE RESURFACING AT A TIME AT DIRECTION OF ENGINEER

TRAFFIC CONTROL LEGEND

- SIGN (SINGLE SIDED)
- CHANNELIZER (TRIM-LINE)
- DIRECTION INDICATOR BARRICADE
- TEMPORARY TRAFFIC BARRIER
- CHANGEABLE MESSAGE SIGN
- IMPACT ATTENUATOR
- TYPE III MOVABLE BARRICADE

DISCLAIMER
THE PROFESSIONAL WHOSE SIGNATURE AND PERSONAL SEAL APPEAR HEREON ASSUMES RESPONSIBILITY ONLY FOR WHAT APPEARS ON THIS PAGE, AND DISCLAIMS (PURSUANT TO SECTION 327.411 RSMO) SPECIFICATION, ESTIMATES, REPORTS, OR OTHER DOCUMENTS OR INSTRUMENTS NOT SEALED BY THE UNDERSIGNED PROFESSIONAL RELATING TO OR INTENDED TO BE USED FOR ANY PART OR PARTS OF THE PROJECT TO WHICH THIS PAGE REFERS.

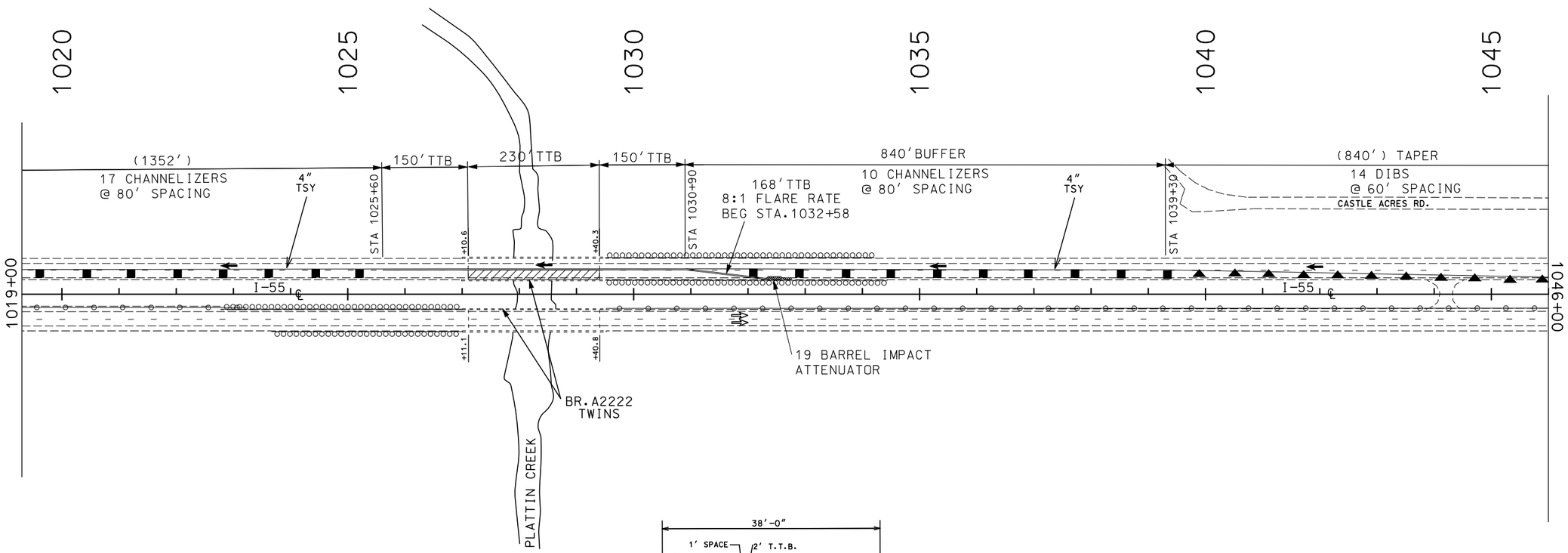

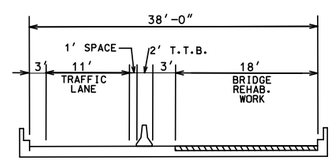

TYPICAL AT BRIDGE A2222 (NB I-55) REHABILITATION
STA 1027+11.1 TO 1029+40.8 (I-55 ℄)

(IN DIRECTION OF INCREASING STATIONING)

STAGE 1A NB

LEGEND

▨	BRIDGE REHABILITATION WORK
4" TSW	TEMPORARY SOLID WHITE TAPE
4" TIW	TEMPORARY INTERMITTENT WHITE TAPE
4" TSY	TEMPORARY SOLID YELLOW TAPE

NOTE:
TEMPORARY TRAFFIC CONTROL SHOWN ON COMBINATION PROJECT J6I3110 WILL BE PAID FOR ON THIS PROJECT. J6I3110 TEMPORARY TRAFFIC CONTROL IS FOR INFORMATIONAL USE ONLY.

SCALE
0 100 200 300 400 500

STATE OF MISSOURI
SHIRLEY J. NORRIS
NUMBER PE-28779
PROFESSIONAL ENGINEER
THIS SHEET HAS BEEN SIGNED, SEALED AND DATED ELECTRONICALLY.

DATE PREPARED	9/29/2016
ROUTE	I-55
STATE	MO
DISTRICT	SL
SHEET NO.	44
COUNTY	JEFFERSON
JOB NO.	J6I3131
CONTRACT ID.	
PROJECT NO.	
BRIDGE NO.	

DESCRIPTION
DATE

IF A SEAL IS PRESENT ON THIS SHEET IT HAS BEEN ELECTRONICALLY SEALED AND DATED.

MISSOURI HIGHWAYS AND TRANSPORTATION COMMISSION
105 WEST CAPITOL
JEFFERSON CITY, MO 65102
1-888-ASK-MODOT (1-888-275-6636)

TRAFFIC CONTROL
STAGE 1A NB
SHEET 39 OF 76

NOTE:
SB I-55 OVER RAILROAD BRIDGE AND PLATTIN CREEK BRIDGE CAN BE STAGED FOR ONE BRIDGE RESURFACING AT A TIME AT DIRECTION OF ENGINEER

TRAFFIC CONTROL LEGEND

- SIGN (SINGLE SIDED)
- CHANNELIZER (TRIM-LINE)
- DIRECTION INDICATOR BARRICADE
- TEMPORARY TRAFFIC BARRIER
- CHANGEABLE MESSAGE SIGN
- IMPACT ATTENUATOR
- TYPE III MOVABLE BARRICADE

DISCLAIMER
THE PROFESSIONAL WHOSE SIGNATURE AND PERSONAL SEAL APPEAR HEREON ASSUMES RESPONSIBILITY ONLY FOR WHAT APPEARS ON THIS PAGE, AND DISCLAIMS (PURSUANT TO SECTION 327.411 RSMO) SPECIFICATION, ESTIMATES, REPORTS, OR OTHER DOCUMENTS OR INSTRUMENTS NOT SEALED BY THE UNDERSIGNED PROFESSIONAL RELATING TO OR INTENDED TO BE USED FOR ANY PART OR PARTS OF THE PROJECT TO WHICH THIS PAGE REFERS.

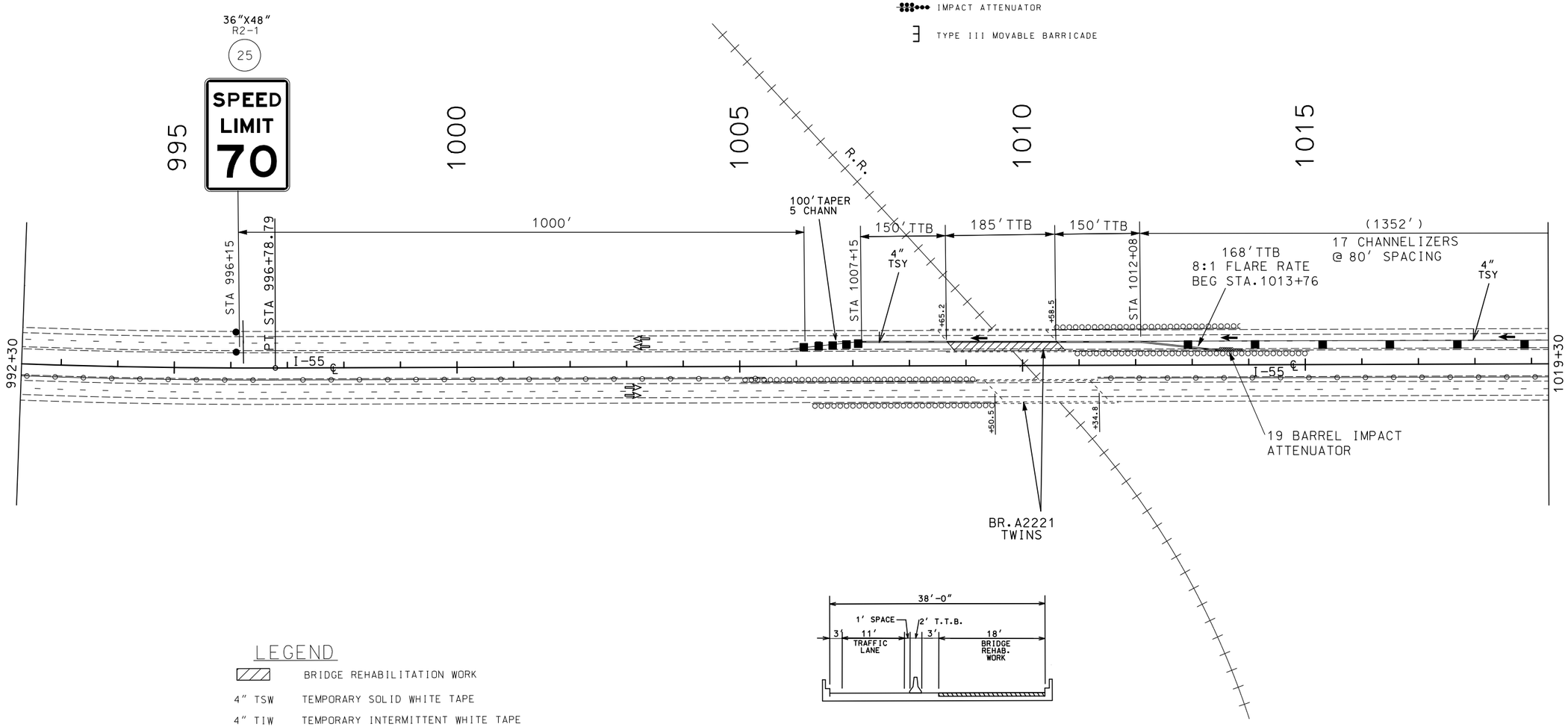

TYPICAL AT BRIDGE A2221 (NB I-55) REHABILITATION
STA 1009+50.5 TO 1011+34.8 (I-55 ℄)

(IN DIRECTION OF INCREASING STATIONING)

STAGE 1A NB

LEGEND

▨	BRIDGE REHABILITATION WORK
4" TSW	TEMPORARY SOLID WHITE TAPE
4" TIW	TEMPORARY INTERMITTENT WHITE TAPE
4" TSY	TEMPORARY SOLID YELLOW TAPE

NOTE:
TEMPORARY TRAFFIC CONTROL SHOWN ON COMBINATION PROJECT J6I3110 WILL BE PAID FOR ON THIS PROJECT. J6I3110 TEMPORARY TRAFFIC CONTROL IS FOR INFORMATIONAL USE ONLY.

SCALE
0 100 200 300 400 500

STATE OF MISSOURI
SHIRLEY J. NORRIS
NUMBER PE-28779
PROFESSIONAL ENGINEER
THIS SHEET HAS BEEN SIGNED, SEALED AND DATED ELECTRONICALLY.

IF A SEAL IS PRESENT ON THIS SHEET IT HAS BEEN ELECTRONICALLY SEALED AND DATED.

DATE PREPARED	9/29/2016
ROUTE	I-55
STATE	MO
DISTRICT	SL
SHEET NO.	45
COUNTY	JEFFERSON
JOB NO.	J6I3131
CONTRACT ID.	
PROJECT NO.	
BRIDGE NO.	

DESCRIPTION
DATE

MISSOURI HIGHWAYS AND TRANSPORTATION COMMISSION
105 WEST CAPITOL
JEFFERSON CITY, MO 65102
1-888-ASK-MODOT (1-888-275-6636)

TRAFFIC CONTROL
STAGE 1A NB

SHEET 40 OF 76

TRAFFIC CONTROL LEGEND

- SIGN (SINGLE SIDED)
- CHANNELIZER (TRIM-LINE)
- DIRECTION INDICATOR BARRICADE
- TEMPORARY TRAFFIC BARRIER
- CHANGEABLE MESSAGE SIGN
- IMPACT ATTENUATOR
- TYPE III MOVABLE BARRICADE
- FLASHING ARROW PANEL

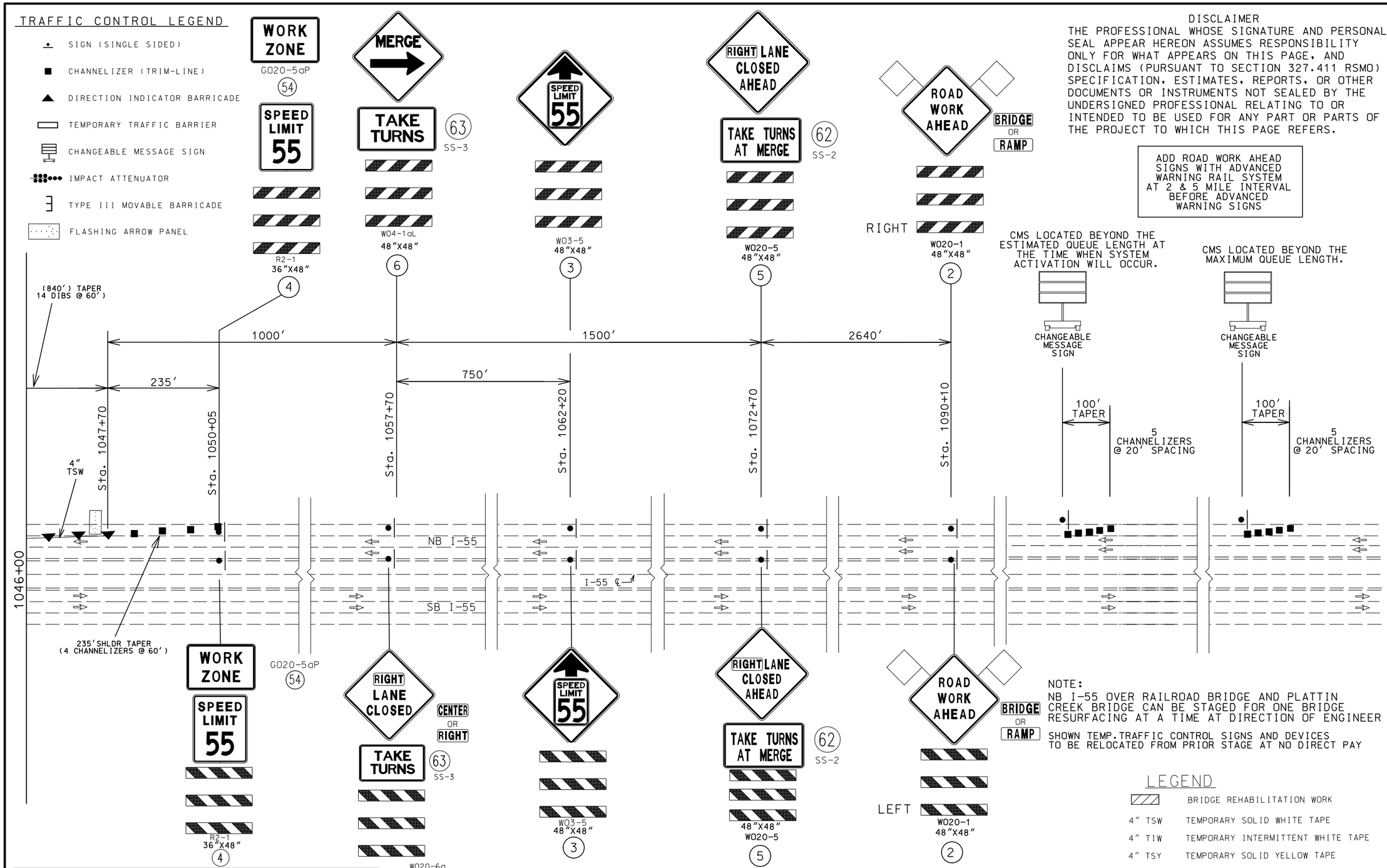

CMS LOCATED BEYOND THE ESTIMATED QUEUE LENGTH AT THE TIME WHEN SYSTEM ACTIVATION WILL OCCUR.

CMS LOCATED BEYOND THE MAXIMUM QUEUE LENGTH.

DISCLAIMER

THE PROFESSIONAL WHOSE SIGNATURE AND PERSONAL SEAL APPEAR HEREON ASSUMES RESPONSIBILITY ONLY FOR WHAT APPEARS ON THIS PAGE, AND DISCLAIMS (PURSUANT TO SECTION 327.411 RSMO) SPECIFICATION, ESTIMATES, REPORTS, OR OTHER DOCUMENTS OR INSTRUMENTS NOT SEALED BY THE UNDERSIGNED PROFESSIONAL RELATING TO OR INTENDED TO BE USED FOR ANY PART OR PARTS OF THE PROJECT TO WHICH THIS PAGE REFERS.

ADD ROAD WORK AHEAD SIGNS WITH ADVANCED WARNING RAIL SYSTEM AT 2 & 5 MILE INTERVAL BEFORE ADVANCED WARNING SIGNS

NOTE:
NB I-55 OVER RAILROAD BRIDGE AND PLATTIN CREEK BRIDGE CAN BE STAGED FOR ONE BRIDGE RESURFACING AT A TIME AT DIRECTION OF ENGINEER

SHOWN TEMP. TRAFFIC CONTROL SIGNS AND DEVICES TO BE RELOCATED FROM PRIOR STAGE AT NO DIRECT PAY

LEGEND

	BRIDGE REHABILITATION WORK
4" TSW	TEMPORARY SOLID WHITE TAPE
4" TIW	TEMPORARY INTERMITTENT WHITE TAPE
4" TSY	TEMPORARY SOLID YELLOW TAPE

NOTE:
TEMPORARY TRAFFIC CONTROL SHOWN ON COMBINATION PROJECT J6I3110 WILL BE PAID FOR ON THIS PROJECT. J6I3110 TEMPORARY TRAFFIC CONTROL IS FOR INFORMATIONAL USE ONLY.

NOTE:
SEE TCP SHEET 74 OF 76 FOR DYNAMIC ZIPPER MERGE SYSTEM DETAILS AND SIGNING.

NOT TO SCALE

STATE OF MISSOURI
SHIRLEY J. NORRIS
NUMBER PE-28779
PROFESSIONAL ENGINEER
THIS SHEET HAS BEEN SIGNED, SEALED AND DATED ELECTRONICALLY.

DATE PREPARED	9/29/2016
ROUTE	I-55
STATE	MO
DISTRICT	SL
SHEET NO.	46
COUNTY	JEFFERSON
JOB NO.	J6I3131
CONTRACT ID.	
PROJECT NO.	
BRIDGE NO.	

DESCRIPTION | DATE

IF A SEAL IS PRESENT ON THIS SHEET IT HAS BEEN ELECTRONICALLY SEALED AND DATED.

MISSOURI HIGHWAYS AND TRANSPORTATION COMMISSION
105 WEST CAPITOL
JEFFERSON CITY, MO 65102
1-888-ASK-MODOT (1-888-275-6636)

TRAFFIC CONTROL
STAGE 1B NB

SHEET 41 OF 76

NOTE:
NB I-55 OVER RAILROAD BRIDGE AND PLATTIN CREEK BRIDGE CAN BE STAGED FOR ONE BRIDGE RESURFACING AT A TIME AT DIRECTION OF ENGINEER

TRAFFIC CONTROL LEGEND

- SIGN (SINGLE SIDED)
- CHANNELIZER (TRIM-LINE)
- DIRECTION INDICATOR BARRICADE
- TEMPORARY TRAFFIC BARRIER
- CHANGEABLE MESSAGE SIGN
- IMPACT ATTENUATOR
- TYPE III MOVABLE BARRICADE

DISCLAIMER
THE PROFESSIONAL WHOSE SIGNATURE AND PERSONAL SEAL APPEAR HEREON ASSUMES RESPONSIBILITY ONLY FOR WHAT APPEARS ON THIS PAGE, AND DISCLAIMS (PURSUANT TO SECTION 327.411 RSMO) SPECIFICATION, ESTIMATES, REPORTS, OR OTHER DOCUMENTS OR INSTRUMENTS NOT SEALED BY THE UNDERSIGNED PROFESSIONAL RELATING TO OR INTENDED TO BE USED FOR ANY PART OR PARTS OF THE PROJECT TO WHICH THIS PAGE REFERS.

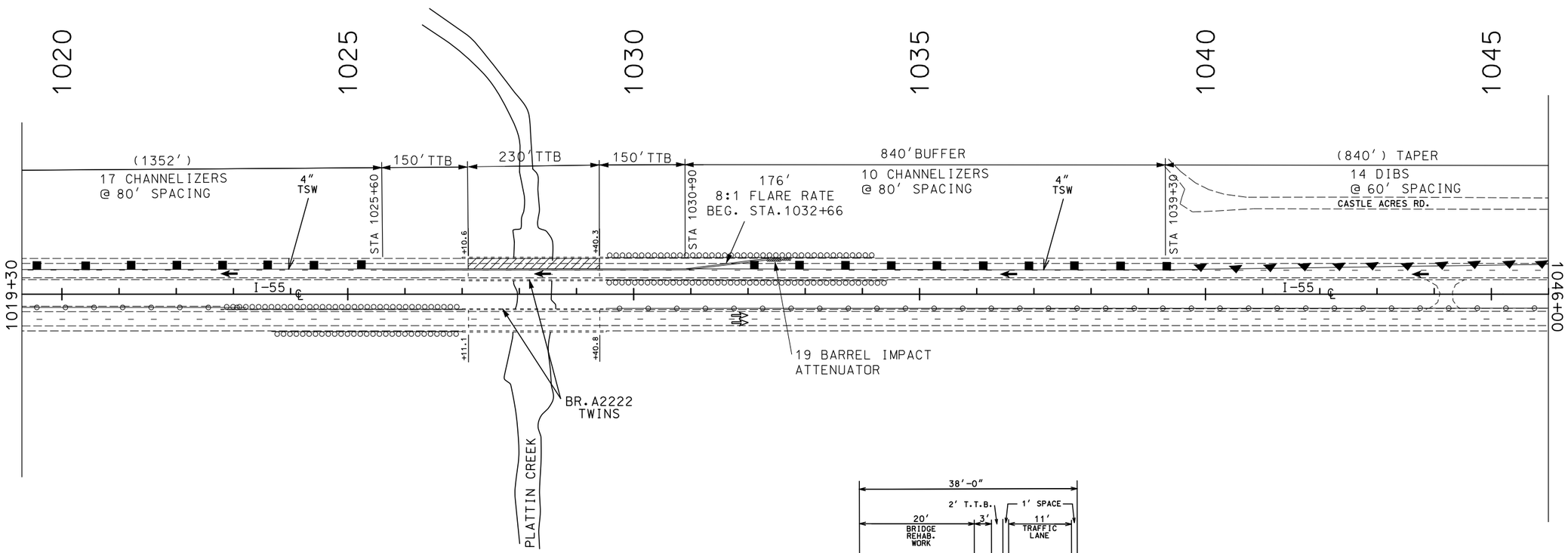

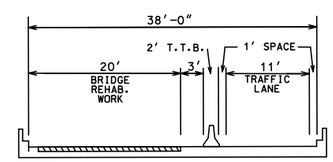

TYPICAL AT BRIDGE A2222 (NB I-55) REHABILITATION
STA 1027+10.6 TO 1029+40.3 (I-55 ℄)

(IN DIRECTION OF INCREASING STATIONING)

STAGE 1B NB

LEGEND

- BRIDGE REHABILITATION WORK
- 4" TSW TEMPORARY SOLID WHITE TAPE
- 4" TIW TEMPORARY INTERMITTENT WHITE TAPE
- 4" TSY TEMPORARY SOLID YELLOW TAPE

NOTE:
TEMPORARY TRAFFIC CONTROL SHOWN ON COMBINATION PROJECT J6I3110 WILL BE PAID FOR ON THIS PROJECT. J6I3110 TEMPORARY TRAFFIC CONTROL IS FOR INFORMATIONAL USE ONLY.

SCALE
0 100 200 300 400 500

STATE OF MISSOURI
SHIRLEY J. NORRIS
NUMBER PE-28779
PROFESSIONAL ENGINEER
THIS SHEET HAS BEEN SIGNED, SEALED AND DATED ELECTRONICALLY.

DATE PREPARED	9/29/2016
ROUTE	I-55
STATE	MO
DISTRICT	SL
SHEET NO.	47
COUNTY	JEFFERSON
JOB NO.	J6I3131
CONTRACT ID.	
PROJECT NO.	
BRIDGE NO.	

DESCRIPTION
DATE

IF A SEAL IS PRESENT ON THIS SHEET IT HAS BEEN ELECTRONICALLY SEALED AND DATED.

MISSOURI HIGHWAYS AND TRANSPORTATION COMMISSION
105 WEST CAPITOL
JEFFERSON CITY, MO 65102
1-888-ASK-MODOT (1-888-275-6636)

TRAFFIC CONTROL
STAGE 1B NB
SHEET 42 OF 76

NOTE:
NB I-55 OVER RAILROAD BRIDGE AND PLATTIN CREEK BRIDGE CAN BE STAGED FOR ONE BRIDGE RESURFACING AT A TIME AT DIRECTION OF ENGINEER

TRAFFIC CONTROL LEGEND

- SIGN (SINGLE SIDED)
- CHANNELIZER (TRIM-LINE)
- DIRECTION INDICATOR BARRICADE
- TEMPORARY TRAFFIC BARRIER
- CHANGEABLE MESSAGE SIGN
- IMPACT ATTENUATOR
- TYPE III MOVABLE BARRICADE

DISCLAIMER
THE PROFESSIONAL WHOSE SIGNATURE AND PERSONAL SEAL APPEAR HEREON ASSUMES RESPONSIBILITY ONLY FOR WHAT APPEARS ON THIS PAGE, AND DISCLAIMS (PURSUANT TO SECTION 327.411 RSMO) SPECIFICATION, ESTIMATES, REPORTS, OR OTHER DOCUMENTS OR INSTRUMENTS NOT SEALED BY THE UNDERSIGNED PROFESSIONAL RELATING TO OR INTENDED TO BE USED FOR ANY PART OR PARTS OF THE PROJECT TO WHICH THIS PAGE REFERS.

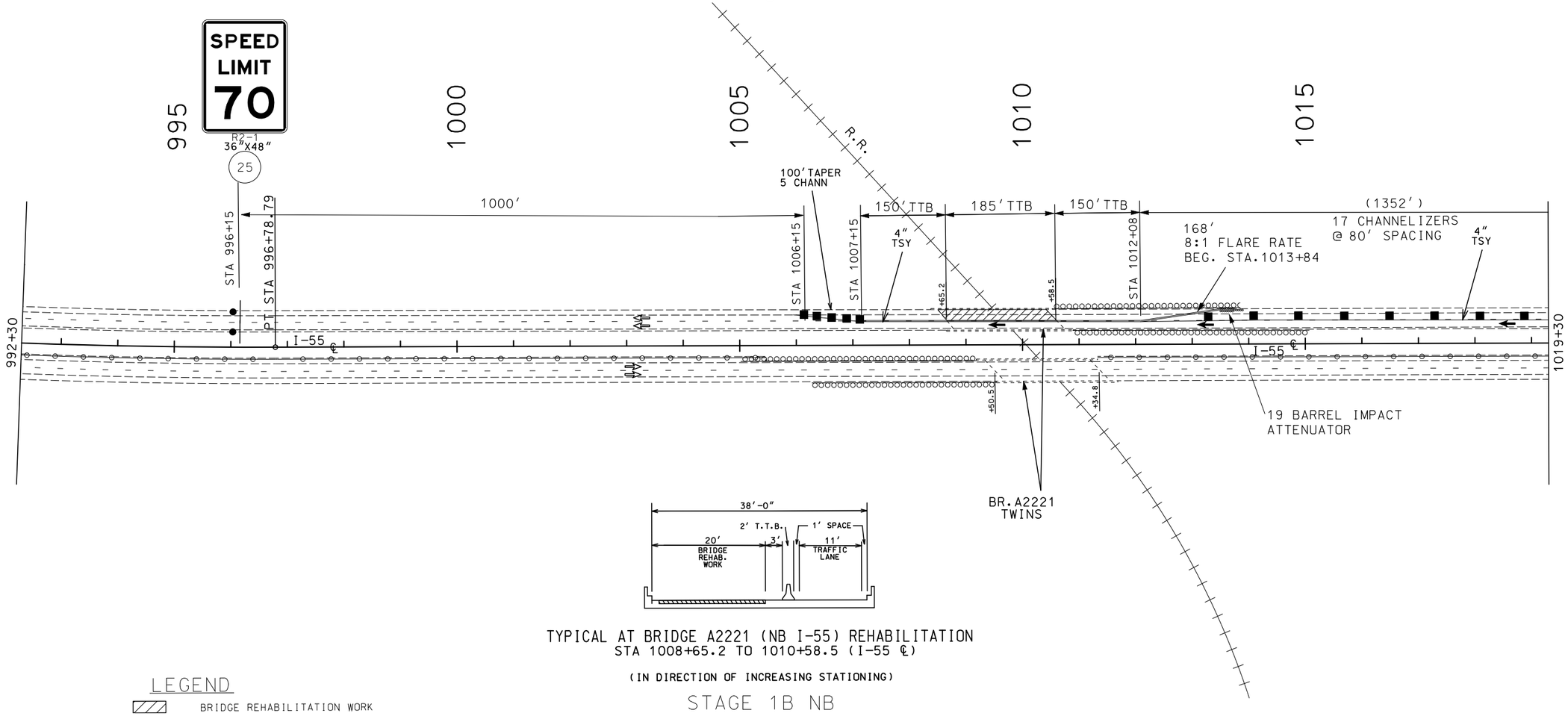

TYPICAL AT BRIDGE A2221 (NB I-55) REHABILITATION
STA 1008+65.2 TO 1010+58.5 (I-55 ℄)

(IN DIRECTION OF INCREASING STATIONING)

STAGE 1B NB

LEGEND

▨	BRIDGE REHABILITATION WORK
4" TSW	TEMPORARY SOLID WHITE TAPE
4" TIW	TEMPORARY INTERMITTENT WHITE TAPE
4" TSY	TEMPORARY SOLID YELLOW TAPE

NOTE:
TEMPORARY TRAFFIC CONTROL SHOWN ON COMBINATION PROJECT J6I3110 WILL BE PAID FOR ON THIS PROJECT. J6I3110 TEMPORARY TRAFFIC CONTROL IS FOR INFORMATIONAL USE ONLY.

SCALE
0 100 200 300 400 500

STATE OF MISSOURI
SHIRLEY J. NORRIS
NUMBER PE-28779
PROFESSIONAL ENGINEER
THIS SHEET HAS BEEN SIGNED, SEALED AND DATED ELECTRONICALLY.

DATE PREPARED	9/29/2016
ROUTE	I-55
STATE	MO
DISTRICT	SL
SHEET NO.	48
COUNTY	JEFFERSON
JOB NO.	J6I3131
CONTRACT ID.	
PROJECT NO.	
BRIDGE NO.	

DESCRIPTION
DATE

IF A SEAL IS PRESENT ON THIS SHEET IT HAS BEEN ELECTRONICALLY SEALED AND DATED.

MISSOURI HIGHWAYS AND TRANSPORTATION COMMISSION
105 WEST CAPITOL
JEFFERSON CITY, MO 65102
1-888-ASK-MODOT (1-888-275-6636)

TRAFFIC CONTROL
STAGE 1B NB

SHEET 43 OF 76

TRAFFIC CONTROL LEGEND

- SIGN (SINGLE SIDED)
- CHANNELIZER (TRIM-LINE)
- DIRECTION INDICATOR BARRICADE
- TEMPORARY TRAFFIC BARRIER
- CHANGEABLE MESSAGE SIGN
- IMPACT ATTENUATOR
- TYPE III MOVABLE BARRICADE

DISCLAIMER

THE PROFESSIONAL WHOSE SIGNATURE AND PERSONAL SEAL APPEAR HEREON ASSUMES RESPONSIBILITY ONLY FOR WHAT APPEARS ON THIS PAGE, AND DISCLAIMS (PURSUANT TO SECTION 327.411 RSMO) SPECIFICATION, ESTIMATES, REPORTS, OR OTHER DOCUMENTS OR INSTRUMENTS NOT SEALED BY THE UNDERSIGNED PROFESSIONAL RELATING TO OR INTENDED TO BE USED FOR ANY PART OR PARTS OF THE PROJECT TO WHICH THIS PAGE REFERS.

ADD ROAD WORK AHEAD SIGNS WITH ADVANCED WARNING RAIL SYSTEM AT 2 & 5 MILE INTERVAL BEFORE ADVANCED WARNING SIGNS

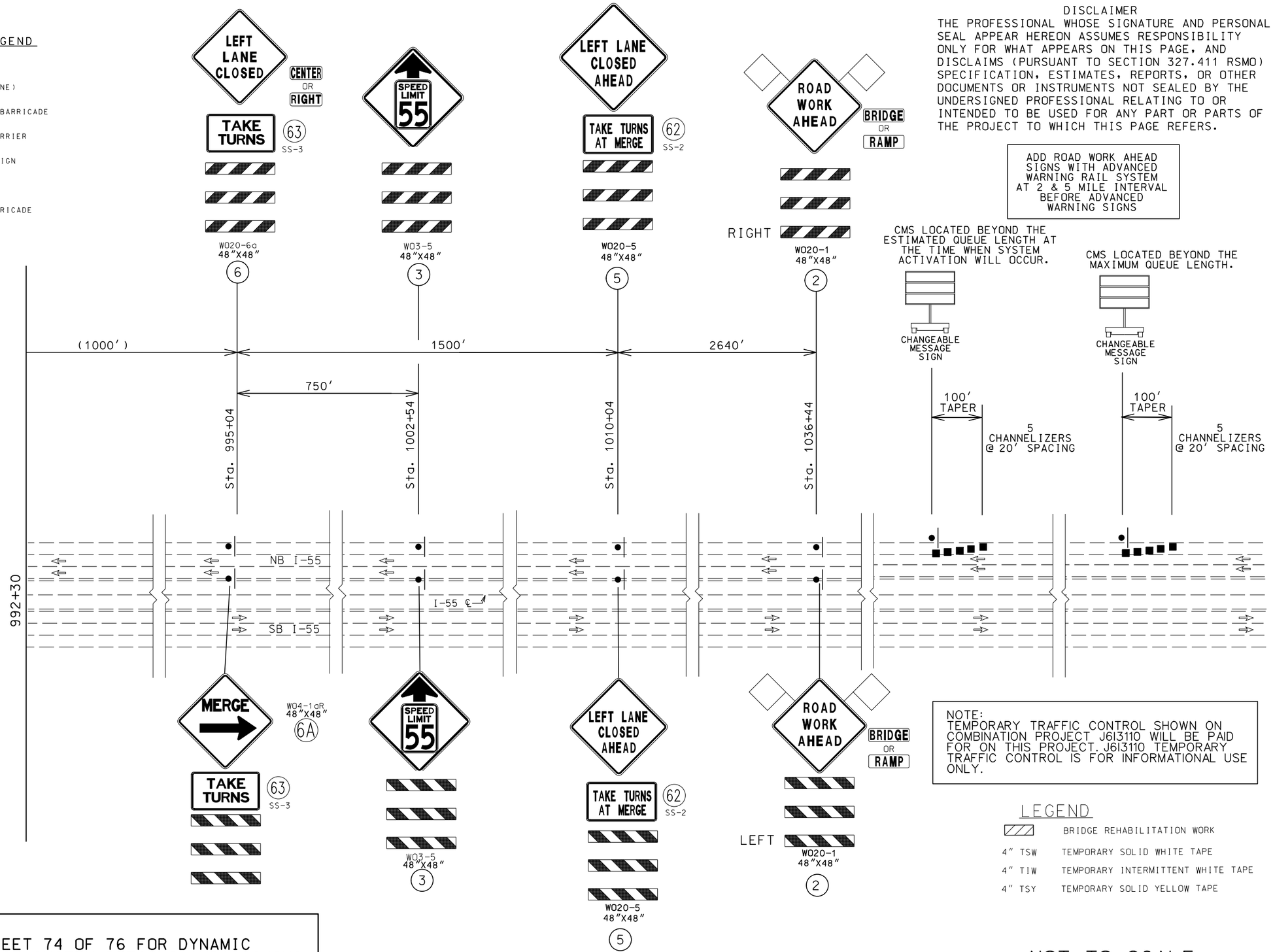

NOTE:
TEMPORARY TRAFFIC CONTROL SHOWN ON COMBINATION PROJECT J6I3110 WILL BE PAID FOR ON THIS PROJECT. J6I3110 TEMPORARY TRAFFIC CONTROL IS FOR INFORMATIONAL USE ONLY.

LEGEND

	BRIDGE REHABILITATION WORK
4" TSW	TEMPORARY SOLID WHITE TAPE
4" TIW	TEMPORARY INTERMITTENT WHITE TAPE
4" TSY	TEMPORARY SOLID YELLOW TAPE

NOTE:
SEE TCP SHEET 74 OF 76 FOR DYNAMIC ZIPPER MERGE SYSTEM DETAILS AND SIGNING.

NOT TO SCALE

SHOWN TEMP.TRAFFIC CONTROL SIGNS AND DEVICES TO BE RELOCATED FROM PRIOR STAGE AT NO DIRECT PAY

STATE OF MISSOURI
SHIRLEY J. NORRIS
NUMBER PE-28779
PROFESSIONAL ENGINEER
THIS SHEET HAS BEEN SIGNED, SEALED AND DATED ELECTRONICALLY.

DATE PREPARED	9/29/2016
ROUTE	I-55
STATE	MO
DISTRICT	SL
SHEET NO.	49
COUNTY	JEFFERSON
JOB NO.	J6I3131
CONTRACT ID.	
PROJECT NO.	
BRIDGE NO.	

DESCRIPTION

DATE

MISSOURI HIGHWAYS AND TRANSPORTATION COMMISSION
105 WEST CAPITOL
JEFFERSON CITY, MO 65102
1-888-ASK-MODOT (1-888-275-6636)

IF A SEAL IS PRESENT ON THIS SHEET IT HAS BEEN ELECTRONICALLY SEALED AND DATED.

TRAFFIC CONTROL

STAGE 2A NB

SHEET 44 OF 76

TRAFFIC CONTROL LEGEND

- SIGN (SINGLE SIDED)
- CHANNELIZER (TRIM-LINE)
- DIRECTION INDICATOR BARRICADE
- TEMPORARY TRAFFIC BARRIER
- CHANGEABLE MESSAGE SIGN
- IMPACT ATTENUATOR
- TYPE III MOVABLE BARRICADE
- FLASHING ARROW PANEL

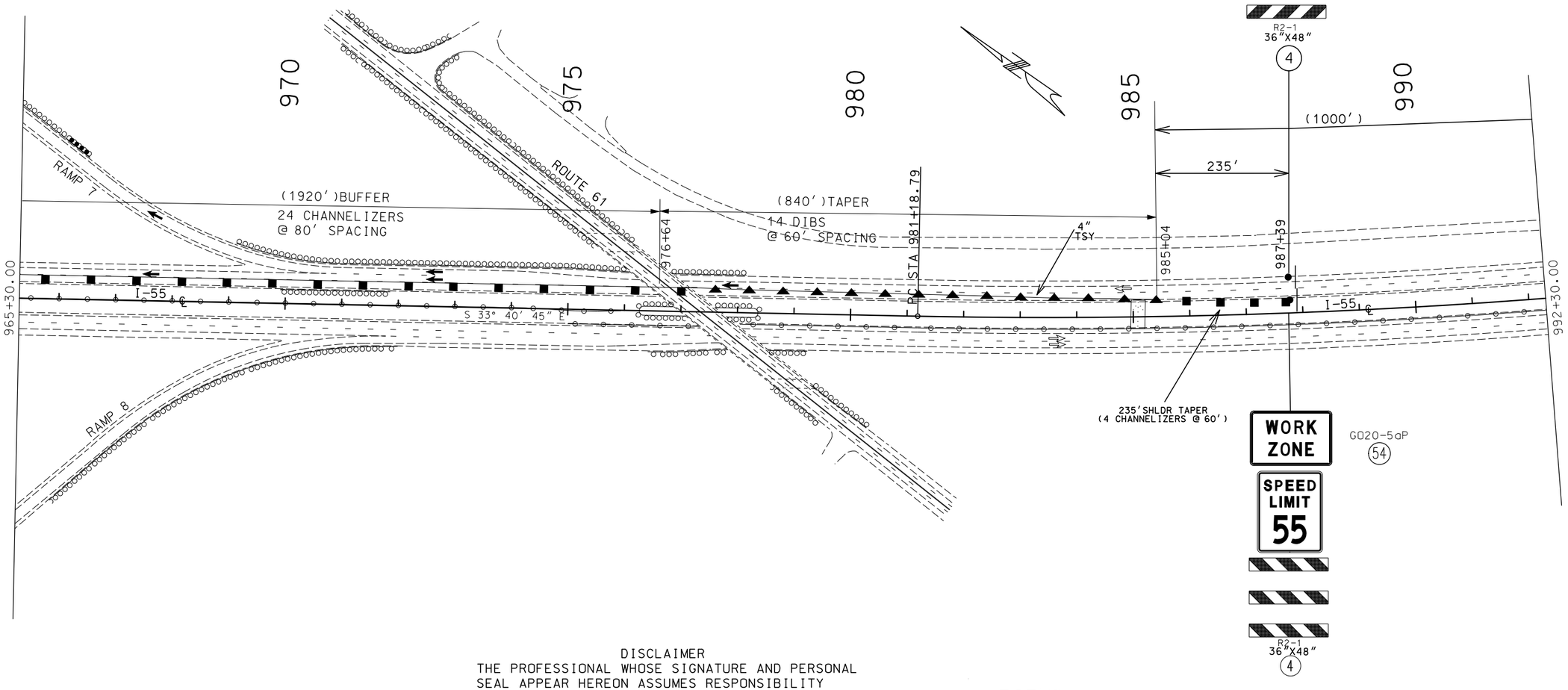

DISCLAIMER
THE PROFESSIONAL WHOSE SIGNATURE AND PERSONAL SEAL APPEAR HEREON ASSUMES RESPONSIBILITY ONLY FOR WHAT APPEARS ON THIS PAGE, AND DISCLAIMS (PURSUANT TO SECTION 327.411 RSMO) SPECIFICATION, ESTIMATES, REPORTS, OR OTHER DOCUMENTS OR INSTRUMENTS NOT SEALED BY THE UNDERSIGNED PROFESSIONAL RELATING TO OR INTENDED TO BE USED FOR ANY PART OR PARTS OF THE PROJECT TO WHICH THIS PAGE REFERS.

NOTE:
TEMPORARY TRAFFIC CONTROL SHOWN ON COMBINATION PROJECT J6I3110 WILL BE PAID FOR ON THIS PROJECT. J6I3110 TEMPORARY TRAFFIC CONTROL IS FOR INFORMATIONAL USE ONLY.

SHOWN TEMP.TRAFFIC CONTROL SIGNS AND DEVICES TO BE RELOCATED FROM PRIOR STAGE AT NO DIRECT PAY

LEGEND

	BRIDGE REHABILITATION WORK
4" TSW	TEMPORARY SOLID WHITE TAPE
4" TIW	TEMPORARY INTERMITTENT WHITE TAPE
4" TSY	TEMPORARY SOLID YELLOW TAPE

SCALE
0 100 200 300 400 500

STATE OF MISSOURI
SHIRLEY J. NORRIS
NUMBER PE-28779
PROFESSIONAL ENGINEER

THIS SHEET HAS BEEN SIGNED, SEALED AND DATED ELECTRONICALLY.

DATE PREPARED	9/29/2016
ROUTE	I-55
STATE	MO
DISTRICT	SL
SHEET NO.	50
COUNTY	JEFFERSON
JOB NO.	J6I3131
CONTRACT ID.	
PROJECT NO.	
BRIDGE NO.	

DATE	DESCRIPTION

MISSOURI HIGHWAYS AND TRANSPORTATION COMMISSION
105 WEST CAPITOL
JEFFERSON CITY, MO 65102
1-888-ASK-MODOT (1-888-275-6636)

IF A SEAL IS PRESENT ON THIS SHEET IT HAS BEEN ELECTRONICALLY SEALED AND DATED.

TRAFFIC CONTROL
STAGE 2A NB

SHEET 45 OF 76

DISCLAIMER
THE PROFESSIONAL WHOSE SIGNATURE AND PERSONAL SEAL APPEAR HEREON ASSUMES RESPONSIBILITY ONLY FOR WHAT APPEARS ON THIS PAGE, AND DISCLAIMS (PURSUANT TO SECTION 327.411 RSMO) SPECIFICATION, ESTIMATES, REPORTS, OR OTHER DOCUMENTS OR INSTRUMENTS NOT SEALED BY THE UNDERSIGNED PROFESSIONAL RELATING TO OR INTENDED TO BE USED FOR ANY PART OR PARTS OF THE PROJECT TO WHICH THIS PAGE REFERS.

LEGEND

4" TSW	TEMPORARY SOLID WHITE TAPE
4" TIW	TEMPORARY INTERMITTENT WHITE TAPE
4" TSY	TEMPORARY SOLID YELLOW TAPE
4" TDS	**TEMPORARY DOTTED WHITE TAPE**

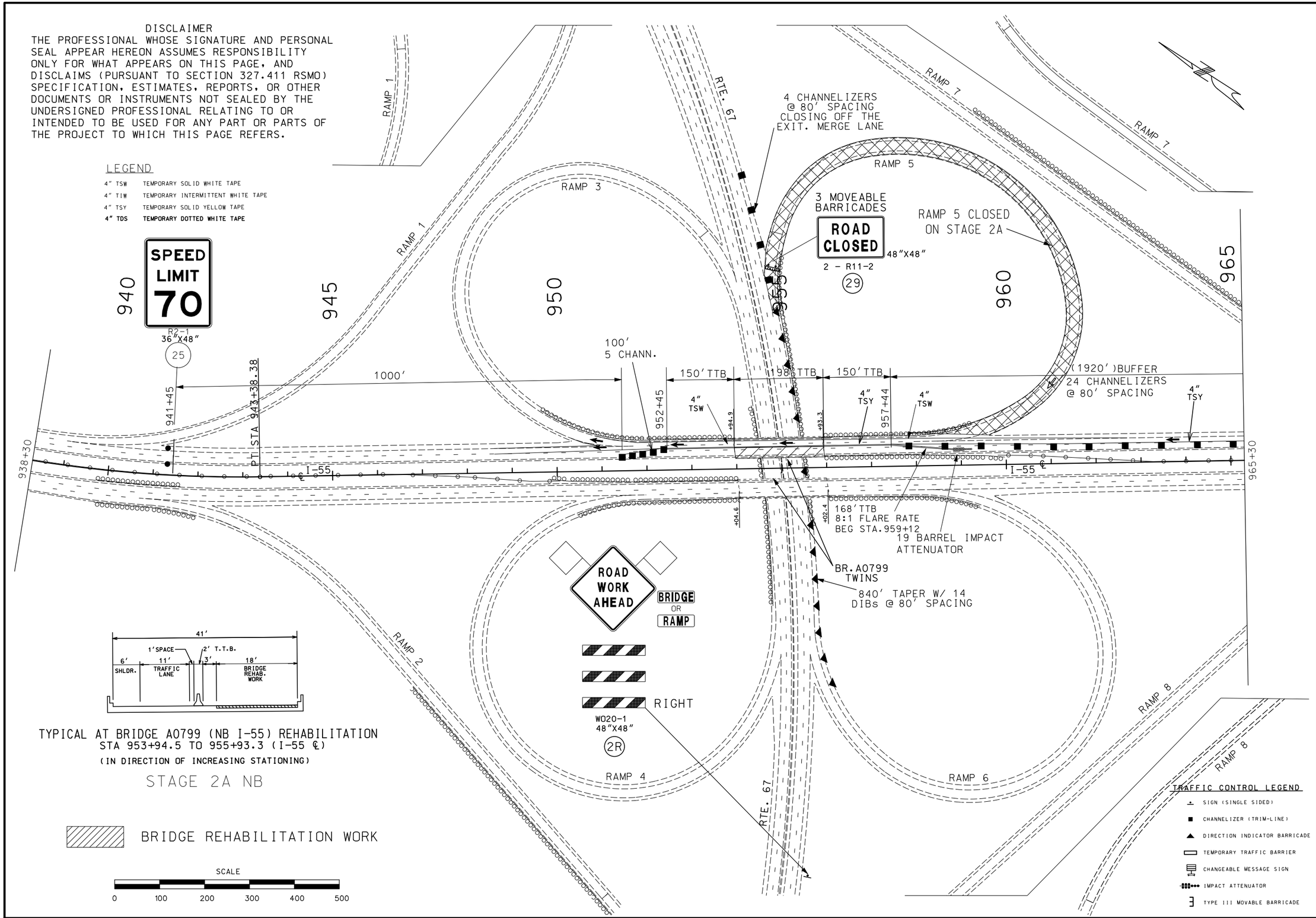

STATE OF MISSOURI
SHIRLEY J. NORRIS
NUMBER PE-28779
PROFESSIONAL ENGINEER
THIS SHEET HAS BEEN SIGNED, SEALED AND DATED ELECTRONICALLY.

DATE PREPARED	9/29/2016
ROUTE	I-55
STATE	MO
DISTRICT	SL
SHEET NO.	51A
COUNTY	JEFFERSON
JOB NO.	J6I3131
CONTRACT ID.	
PROJECT NO.	
BRIDGE NO.	

DESCRIPTION
DATE

IF A SEAL IS PRESENT ON THIS SHEET IT HAS BEEN ELECTRONICALLY SEALED AND DATED.

MISSOURI HIGHWAYS AND TRANSPORTATION COMMISSION
105 WEST CAPITOL
JEFFERSON CITY, MO 65102
1-888-ASK-MODOT (1-888-275-6636)

TRAFFIC CONTROL
STAGE 2A NB
SHEET 46A OF 76

DETOUR FOR NORTHBOUND I-55 @ ROUTE 67 RAMP 5 CLOSURE DURING STAGE 2A CONSTRUCTION

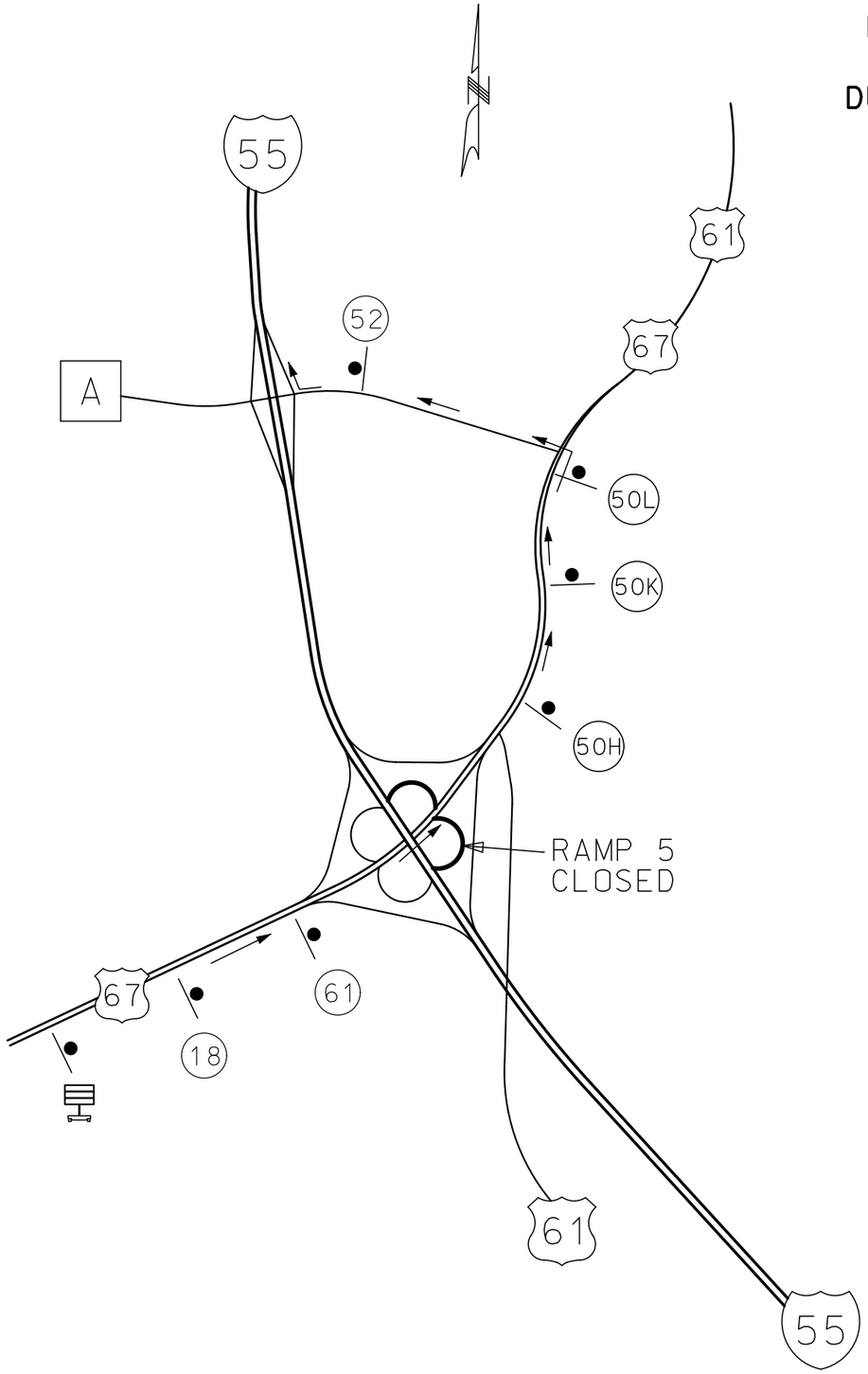

GENERAL NOTES:

1. ANY EXISTING SIGNS THAT CONFLICT WITH THE TRAFFIC CONTROL PLAN SHALL BE COMPLETELY COVERED OR REMOVED.
2. ALL SIGNS SHALL BE GROUND-MOUNTED.
3. ALL DISTANCES AND SPACING OF TRAFFIC CONTROL DEVICES ARE APPROXIMATE AND MAY BE REVISED AS DIRECTED BY THE ENGINEER TO FIT FIELD CONDITIONS.

DISCLAIMER

THE PROFESSIONAL WHOSE SIGNATURE AND PERSONAL SEAL APPEAR HEREON ASSUMES RESPONSIBILITY ONLY FOR WHAT APPEARS ON THIS PAGE, AND DISCLAIMS (PURSUANT TO SECTION 327.411 RSMO) SPECIFICATION, ESTIMATES, REPORTS, OR OTHER DOCUMENTS OR INSTRUMENTS NOT SEALED BY THE UNDERSIGNED PROFESSIONAL RELATING TO OR INTENDED TO BE USED FOR ANY PART OR PARTS OF THE PROJECT TO WHICH THIS PAGE REFERS.

TRAFFIC CONTROL LEGEND

- SIGN (SINGLE SIDED)
- CHANGEABLE MESSAGE BOARD (WITH 5 CHANNELIZERS)

W020-2
48"X48"
(18)

M04-8a
24"X18"
(52)

SPECIAL SIGN
36"X78"
(50H)
(SEE SIGN DETAIL SHEET)

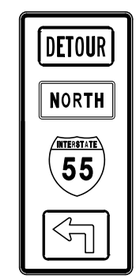

SPECIAL SIGN
36"78"
(50K)
(SEE SIGN DETAIL SHEET)

SPECIAL SIGN
36"78"
(50L)
(SEE SIGN DETAIL SHEET)

SPECIAL SIGN
96"X72"
(61)
(SEE SIGN DETAIL SHEET)

NOT TO SCALE

STATE OF MISSOURI
SHIRLEY J. NORRIS
NUMBER PE-28779
PROFESSIONAL ENGINEER
THIS SHEET HAS BEEN SIGNED, SEALED AND DATED ELECTRONICALLY.

DATE PREPARED	9/29/2016
ROUTE	I-55
STATE	MO
DISTRICT	SL
SHEET NO.	51B
COUNTY	JEFFERSON
JOB NO.	J6I3131
CONTRACT ID.	
PROJECT NO.	
BRIDGE NO.	

DATE	DESCRIPTION

IF A SEAL IS PRESENT ON THIS SHEET IT HAS BEEN ELECTRONICALLY SEALED AND DATED.

MISSOURI HIGHWAYS AND TRANSPORTATION COMMISSION
105 WEST CAPITOL
JEFFERSON CITY, MO 65102
1-888-ASK-MODOT (1-888-275-6636)

TRAFFIC CONTROL
I-55 DETOUR PLAN
STAGE 2A NB
SHEET 45B OF 76

SHOWN TEMP. TRAFFIC CONTROL SIGNS AND DEVICES TO BE RELOCATED FROM PRIOR STAGE AT NO DIRECT PAY

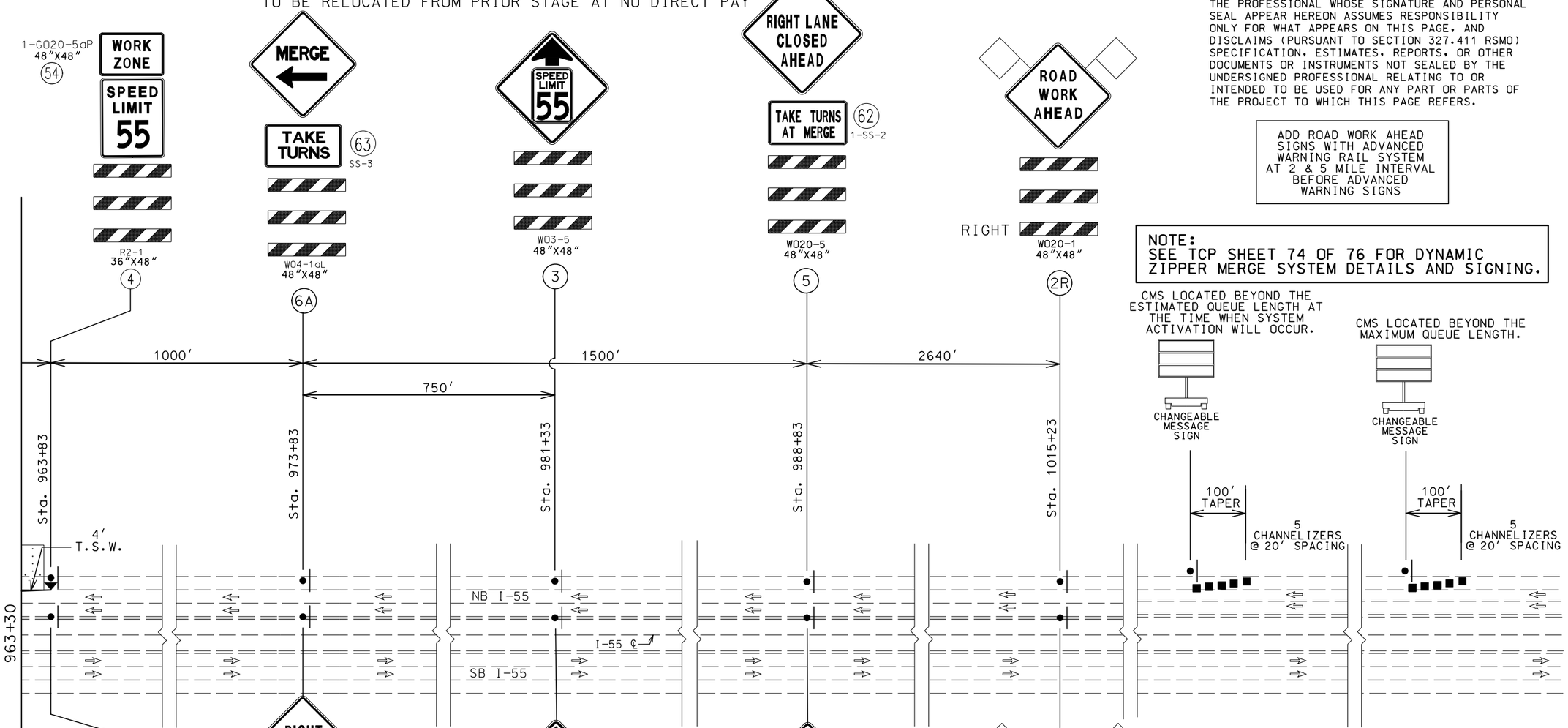

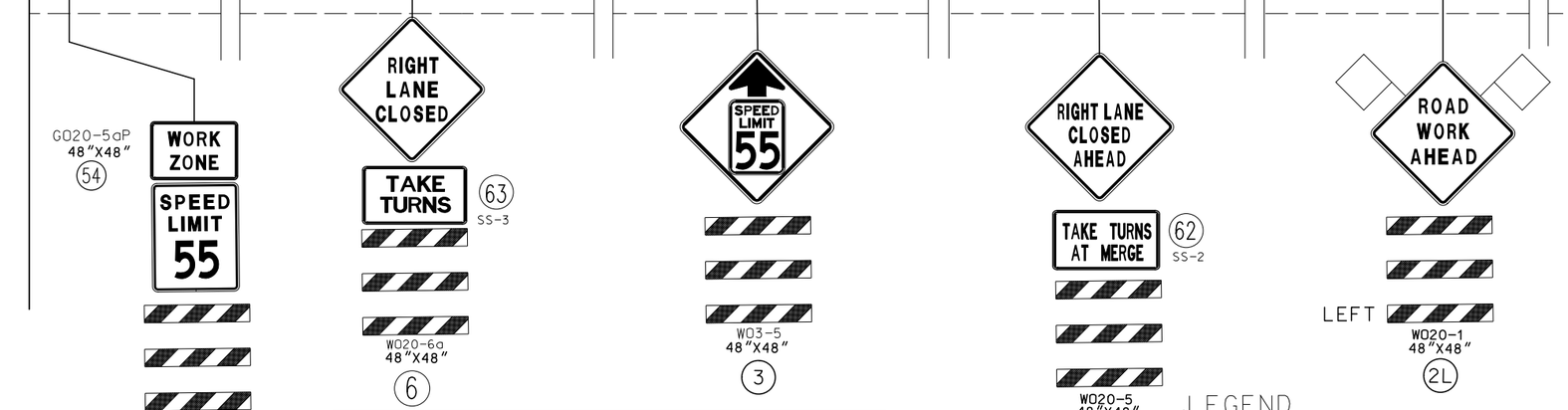

NOTE:
TEMPORARY TRAFFIC CONTROL SHOWN ON COMBINATION PROJECT J6I3110 WILL BE PAID FOR ON THIS PROJECT. J6I3110 TEMPORARY TRAFFIC CONTROL IS FOR INFORMATIONAL USE ONLY.

LEGEND

	BRIDGE REHABILITATION WORK
4" TSW	TEMPORARY SOLID WHITE TAPE
4" TIW	TEMPORARY INTERMITTENT WHITE TAPE
4" TSY	TEMPORARY SOLID YELLOW TAPE

DISCLAIMER
THE PROFESSIONAL WHOSE SIGNATURE AND PERSONAL SEAL APPEAR HEREON ASSUMES RESPONSIBILITY ONLY FOR WHAT APPEARS ON THIS PAGE, AND DISCLAIMS (PURSUANT TO SECTION 327.411 RSMO) SPECIFICATION, ESTIMATES, REPORTS, OR OTHER DOCUMENTS OR INSTRUMENTS NOT SEALED BY THE UNDERSIGNED PROFESSIONAL RELATING TO OR INTENDED TO BE USED FOR ANY PART OR PARTS OF THE PROJECT TO WHICH THIS PAGE REFERS.

ADD ROAD WORK AHEAD SIGNS WITH ADVANCED WARNING RAIL SYSTEM AT 2 & 5 MILE INTERVAL BEFORE ADVANCED WARNING SIGNS

NOTE:
SEE TCP SHEET 74 OF 76 FOR DYNAMIC ZIPPER MERGE SYSTEM DETAILS AND SIGNING.

TRAFFIC CONTROL LEGEND

- SIGN (SINGLE SIDED)
- CHANNELIZER (TRIM-LINE)
- DIRECTION INDICATOR BARRICADE
- TEMPORARY TRAFFIC BARRIER
- CHANGEABLE MESSAGE SIGN
- IMPACT ATTENUATOR
- TYPE III MOVABLE BARRICADE
- FLASHING ARROW PANEL

SCALE
0 100 200 300 400 500

STATE OF MISSOURI
SHIRLEY J. NORRIS
NUMBER PE-28779
PROFESSIONAL ENGINEER
THIS SHEET HAS BEEN SIGNED, SEALED AND DATED ELECTRONICALLY.

IF A SEAL IS PRESENT ON THIS SHEET IT HAS BEEN ELECTRONICALLY SEALED AND DATED.

DATE PREPARED	9/29/2016
ROUTE	I-55
STATE	MO
DISTRICT	SL
SHEET NO.	52
COUNTY	JEFFERSON
JOB NO.	J6I3131
CONTRACT ID.	
PROJECT NO.	
BRIDGE NO.	

DATE	DESCRIPTION

MISSOURI HIGHWAYS AND TRANSPORTATION COMMISSION
105 WEST CAPITOL
JEFFERSON CITY, MO 65102
1-888-ASK-MODOT (1-888-275-6636)

TRAFFIC CONTROL
STAGE 2B NB
SHEET 47 OF 76

DISCLAIMER

THE PROFESSIONAL WHOSE SIGNATURE AND PERSONAL SEAL APPEAR HEREON ASSUMES RESPONSIBILITY ONLY FOR WHAT APPEARS ON THIS PAGE, AND DISCLAIMS (PURSUANT TO SECTION 327.411 RSMO) SPECIFICATION, ESTIMATES, REPORTS, OR OTHER DOCUMENTS OR INSTRUMENTS NOT SEALED BY THE UNDERSIGNED PROFESSIONAL RELATING TO OR INTENDED TO BE USED FOR ANY PART OR PARTS OF THE PROJECT TO WHICH THIS PAGE REFERS.

TRAFFIC CONTROL LEGEND

- SIGN (SINGLE SIDED)
- CHANNELIZER (TRIM-LINE)
- DIRECTION INDICATOR BARRICADE
- TEMPORARY TRAFFIC BARRIER
- CHANGEABLE MESSAGE SIGN
- IMPACT ATTENUATOR
- TYPE III MOVABLE BARRICADE
- WORK AREA

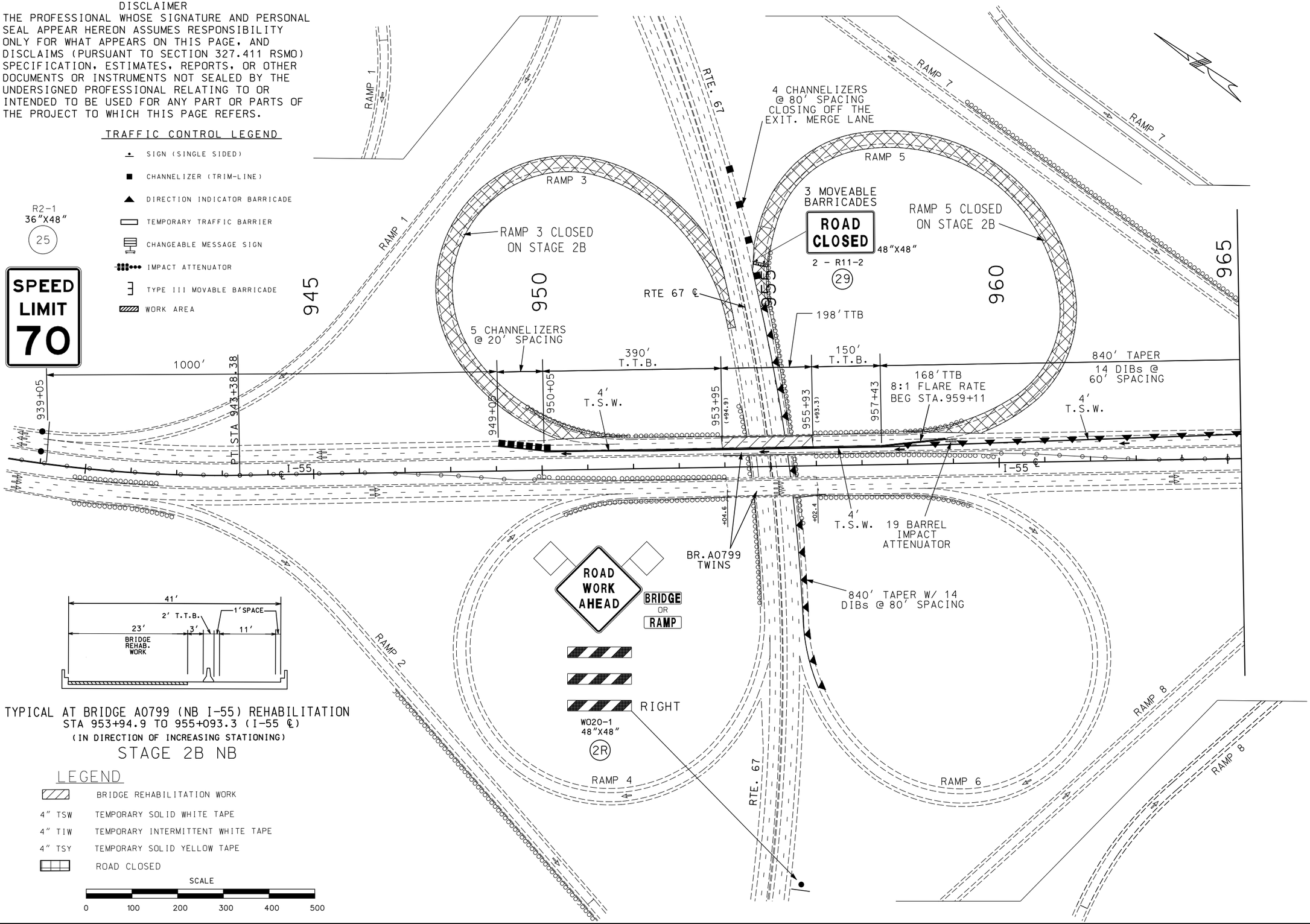

TYPICAL AT BRIDGE A0799 (NB I-55) REHABILITATION
STA 953+94.9 TO 955+093.3 (I-55 ℄)
(IN DIRECTION OF INCREASING STATIONING)

STAGE 2B NB

LEGEND

- BRIDGE REHABILITATION WORK
- 4" TSW TEMPORARY SOLID WHITE TAPE
- 4" TIW TEMPORARY INTERMITTENT WHITE TAPE
- 4" TSY TEMPORARY SOLID YELLOW TAPE
- ROAD CLOSED

SCALE

0 100 200 300 400 500

STATE OF MISSOURI
SHIRLEY J. NORRIS
NUMBER PE-28779
PROFESSIONAL ENGINEER

THIS SHEET HAS BEEN SIGNED, SEALED AND DATED ELECTRONICALLY.

DATE PREPARED	
10/27/2016	
ROUTE	STATE
I-55	MO
DISTRICT	SHEET NO.
SL	53
COUNTY	
JEFFERSON	
JOB NO.	
J6I3131	
CONTRACT ID.	
PROJECT NO.	
BRIDGE NO.	

DATE	DESCRIPTION

IF A SEAL IS PRESENT ON THIS SHEET IT HAS BEEN ELECTRONICALLY SEALED AND DATED.

MISSOURI HIGHWAYS AND TRANSPORTATION COMMISSION

105 WEST CAPITOL
JEFFERSON CITY, MO 65102
1-888-ASK-MODOT (1-888-275-6636)

TRAFFIC CONTROL

STAGE 2B NB

SHEET 48 OF 76

DETOUR FOR NORTHBOUND I-55 @ ROUTE 67 RAMPS 3 & 5 CLOSURE DURING STAGE 2B CONSTRUCTION

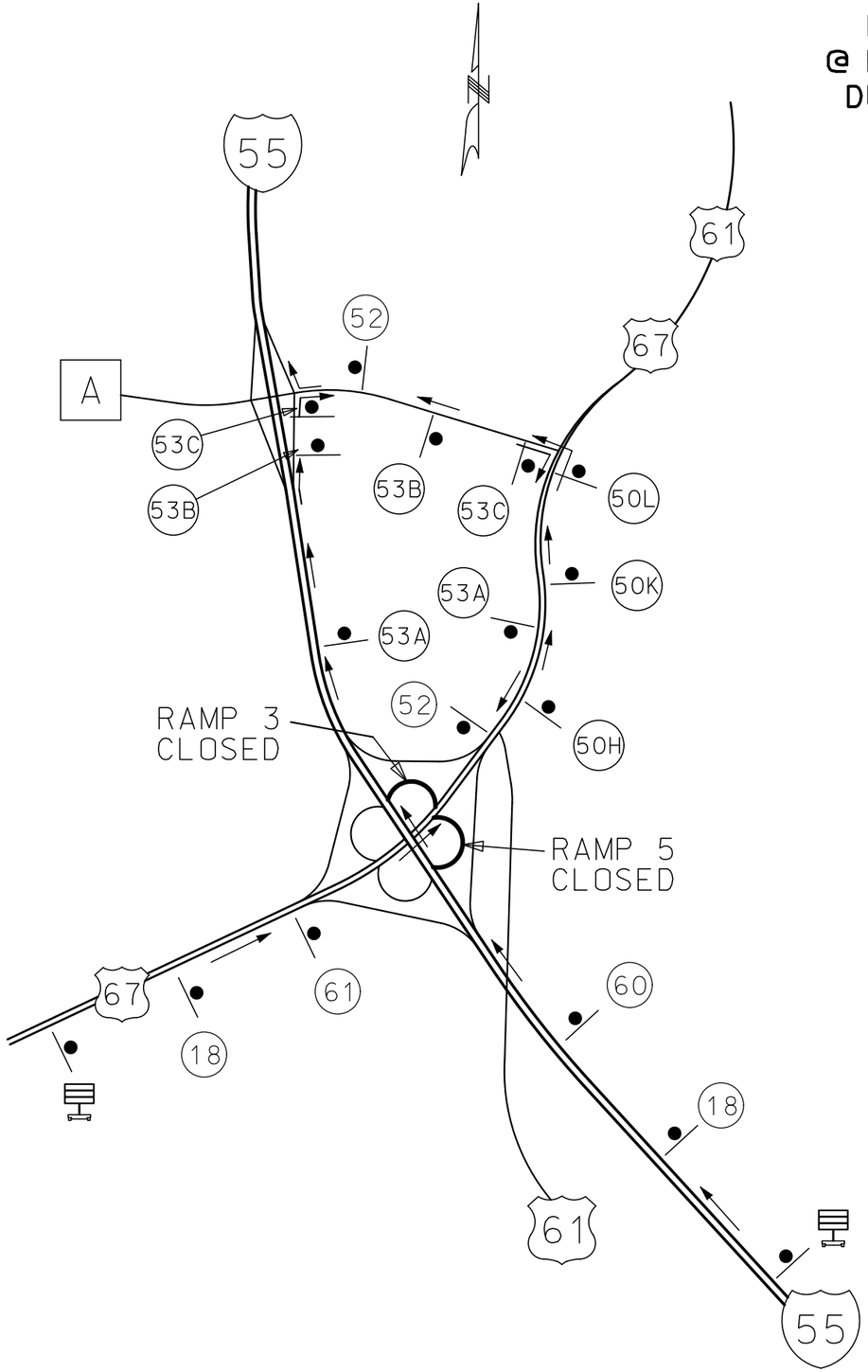

GENERAL NOTES:

1. ANY EXISTING SIGNS THAT CONFLICT WITH THE TRAFFIC CONTROL PLAN SHALL BE COMPLETELY COVERED OR REMOVED.
2. ALL SIGNS SHALL BE GROUND-MOUNTED.
3. ALL DISTANCES AND SPACING OF TRAFFIC CONTROL DEVICES ARE APPROXIMATE AND MAY BE REVISED AS DIRECTED BY THE ENGINEER TO FIT FIELD CONDITIONS.

DISCLAIMER

THE PROFESSIONAL WHOSE SIGNATURE AND PERSONAL SEAL APPEAR HEREON ASSUMES RESPONSIBILITY ONLY FOR WHAT APPEARS ON THIS PAGE, AND DISCLAIMS (PURSUANT TO SECTION 327.411 RSMO) SPECIFICATION, ESTIMATES, REPORTS, OR OTHER DOCUMENTS OR INSTRUMENTS NOT SEALED BY THE UNDERSIGNED PROFESSIONAL RELATING TO OR INTENDED TO BE USED FOR ANY PART OR PARTS OF THE PROJECT TO WHICH THIS PAGE REFERS.

TRAFFIC CONTROL LEGEND

- SIGN (SINGLE SIDED)
- CHANGEABLE MESSAGE BOARD (WITH 5 CHANNELIZERS)

W020-2
48"X48"
18

M04-8a
24"X18"
52

SPECIAL SIGN
36"X78"
50H
(SEE SIGN DETAIL SHEET)

SPECIAL SIGN
36"X78"
50K
(SEE SIGN DETAIL SHEET)

SPECIAL SIGN
36"X78"
50L
(SEE SIGN DETAIL SHEET)

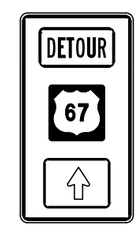

SPECIAL SIGN
36"X60"
53A
(SEE SIGN DETAIL SHEET)

SPECIAL SIGN
36"X60"
53B
(SEE SIGN DETAIL SHEET)

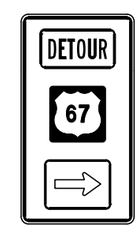

SPECIAL SIGN
36"X60"
53C
(SEE SIGN DETAIL SHEET)

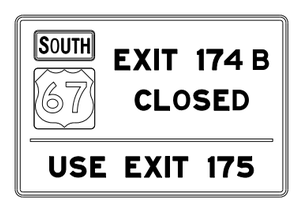

SPECIAL SIGN
108"X72"
60
(SEE SIGN DETAIL SHEET)

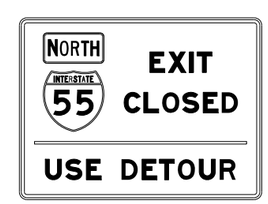

SPECIAL SIGN
96"X72"
61
(SEE SIGN DETAIL SHEET)

NOT TO SCALE

STATE OF MISSOURI
SHIRLEY J. NORRIS
NUMBER PE-28779
PROFESSIONAL ENGINEER

THIS SHEET HAS BEEN SIGNED, SEALED AND DATED ELECTRONICALLY.

IF A SEAL IS PRESENT ON THIS SHEET IT HAS BEEN ELECTRONICALLY SEALED AND DATED.

DATE PREPARED	
9/29/2016	
ROUTE	STATE
I-55	MO
DISTRICT	SHEET NO.
SL	54
COUNTY	
JEFFERSON	
JOB NO.	
J6I3131	
CONTRACT ID.	
PROJECT NO.	
BRIDGE NO.	

DESCRIPTION	DATE

MISSOURI HIGHWAYS AND TRANSPORTATION COMMISSION
105 WEST CAPITOL
JEFFERSON CITY, MO 65102
1-888-ASK-MODOT (1-888-275-6636)

TRAFFIC CONTROL
I-55 DETOUR PLAN
STAGE 2B NB
SHEET 49 OF 76

LEGEND

	BRIDGE REHABILITATION WORK
4" TSW	TEMPORARY SOLID WHITE TAPE
4" TIW	TEMPORARY INTERMITTENT WHITE TAPE
4" TSY	TEMPORARY SOLID YELLOW TAPE

NOTE:
TEMPORARY TRAFFIC CONTROL SHOWN ON COMBINATION PROJECT J6I3110 WILL BE PAID FOR ON THIS PROJECT. J6I3110 TEMPORARY TRAFFIC CONTROL IS FOR INFORMATIONAL USE ONLY.

ADD ROAD WORK AHEAD SIGNS WITH ADVANCED WARNING RAIL SYSTEM AT 2 & 5 MILE INTERVAL BEFORE ADVANCED WARNING SIGNS

DISCLAIMER
THE PROFESSIONAL WHOSE SIGNATURE AND PERSONAL SEAL APPEAR HEREON ASSUMES RESPONSIBILITY ONLY FOR WHAT APPEARS ON THIS PAGE, AND DISCLAIMS (PURSUANT TO SECTION 327.411 RSMO) SPECIFICATION, ESTIMATES, REPORTS, OR OTHER DOCUMENTS OR INSTRUMENTS NOT SEALED BY THE UNDERSIGNED PROFESSIONAL RELATING TO OR INTENDED TO BE USED FOR ANY PART OR PARTS OF THE PROJECT TO WHICH THIS PAGE REFERS.

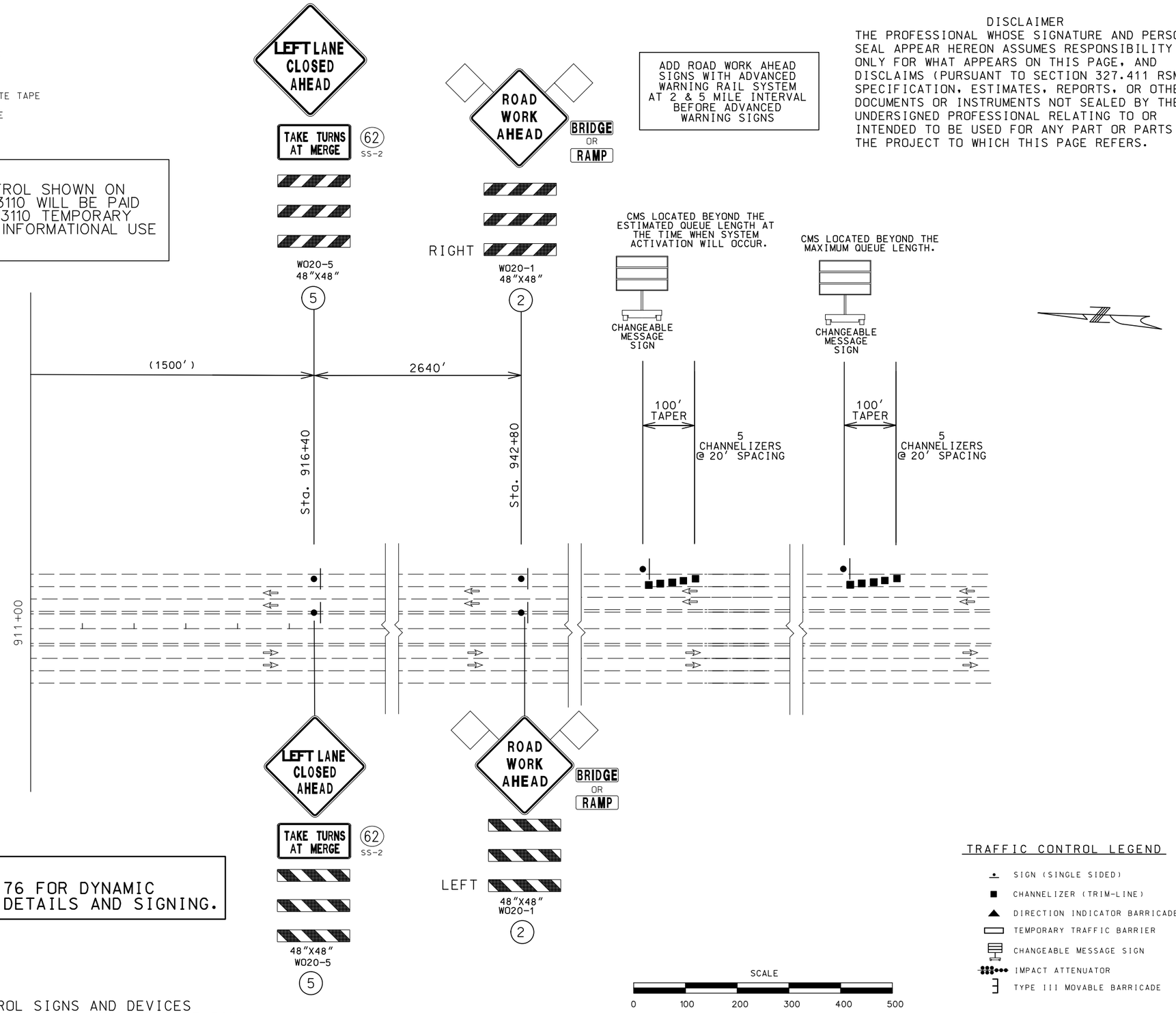

NOTE:
SEE TCP SHEET 74 OF 76 FOR DYNAMIC ZIPPER MERGE SYSTEM DETAILS AND SIGNING.

NOTE:
SHOWN TEMP. TRAFFIC CONTROL SIGNS AND DEVICES TO BE RELOCATED FROM PRIOR STAGE AT NO DIRECT PAY

SCALE
0 100 200 300 400 500

TRAFFIC CONTROL LEGEND

- SIGN (SINGLE SIDED)
- CHANNELIZER (TRIM-LINE)
- DIRECTION INDICATOR BARRICADE
- TEMPORARY TRAFFIC BARRIER
- CHANGEABLE MESSAGE SIGN
- IMPACT ATTENUATOR
- TYPE III MOVABLE BARRICADE

STATE OF MISSOURI
SHIRLEY J. NORRIS
NUMBER PE-28779
PROFESSIONAL ENGINEER
THIS SHEET HAS BEEN SIGNED, SEALED AND DATED ELECTRONICALLY.

DATE PREPARED	9/29/2016
ROUTE	I-55
STATE	MO
DISTRICT	SL
SHEET NO.	55
COUNTY	JEFFERSON
JOB NO.	J6I3131
CONTRACT ID.	
PROJECT NO.	
BRIDGE NO.	

DESCRIPTION
DATE

IF A SEAL IS PRESENT ON THIS SHEET IT HAS BEEN ELECTRONICALLY SEALED AND DATED.

MISSOURI HIGHWAYS AND TRANSPORTATION COMMISSION
105 WEST CAPITOL
JEFFERSON CITY, MO 65102
1-888-ASK-MODOT (1-888-275-6636)

TRAFFIC CONTROL
STAGE 3A NB
SHEET 50 OF 76

DISCLAIMER
THE PROFESSIONAL WHOSE SIGNATURE AND PERSONAL SEAL APPEAR HEREON ASSUMES RESPONSIBILITY ONLY FOR WHAT APPEARS ON THIS PAGE, AND DISCLAIMS (PURSUANT TO SECTION 327.411 RSMO) SPECIFICATION, ESTIMATES, REPORTS, OR OTHER DOCUMENTS OR INSTRUMENTS NOT SEALED BY THE UNDERSIGNED PROFESSIONAL RELATING TO OR INTENDED TO BE USED FOR ANY PART OR PARTS OF THE PROJECT TO WHICH THIS PAGE REFERS.

NOTE:
SEE TCP SHEET 74 OF 76 FOR DYNAMIC ZIPPER MERGE SYSTEM DETAILS AND SIGNING

TRAFFIC CONTROL LEGEND

- SIGN (SINGLE SIDED)
- CHANNELIZER (TRIM-LINE)
- DIRECTION INDICATOR BARRICADE
- TEMPORARY TRAFFIC BARRIER
- CHANGEABLE MESSAGE SIGN
- IMPACT ATTENUATOR
- TYPE III MOVABLE BARRICADE
- FLASHING ARROW PANEL

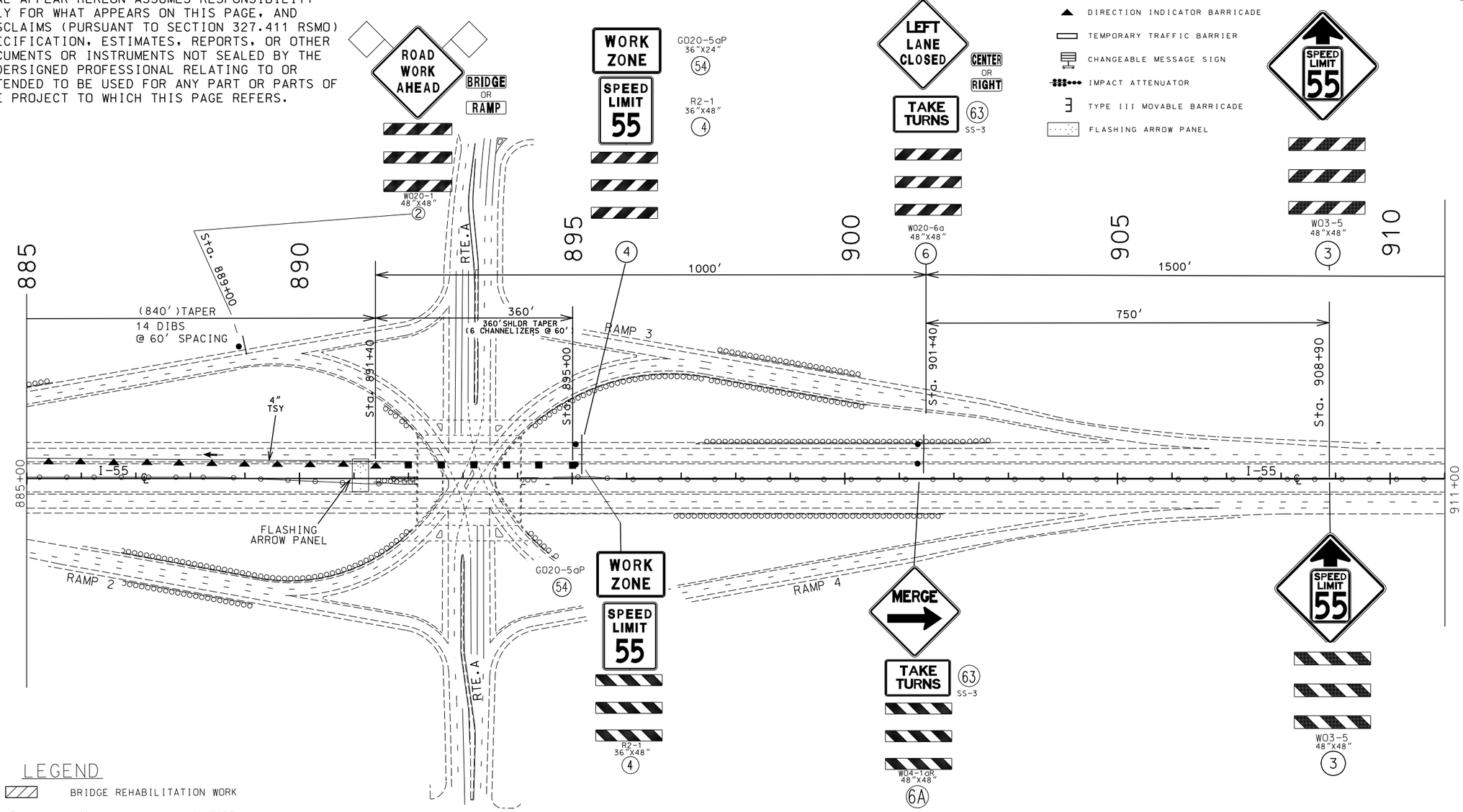

LEGEND

	BRIDGE REHABILITATION WORK
4" TSW	TEMPORARY SOLID WHITE TAPE
4" TIW	TEMPORARY INTERMITTENT WHITE TAPE
4" TSY	TEMPORARY SOLID YELLOW TAPE

NOTE:
TEMPORARY TRAFFIC CONTROL SHOWN ON COMBINATION PROJECT J6I3110 WILL BE PAID FOR ON THIS PROJECT. J6I3110 TEMPORARY TRAFFIC CONTROL IS FOR INFORMATIONAL USE ONLY.

NOTE:
SHOWN TEMP. TRAFFIC CONTROL SIGNS AND DEVICES TO BE RELOCATED FROM PRIOR STAGE AT NO DIRECT PAY

SCALE
0 100 200 300 400 500

STATE OF MISSOURI
SHIRLEY J. NORRIS
NUMBER PE-28779
PROFESSIONAL ENGINEER
THIS SHEET HAS BEEN SIGNED, SEALED AND DATED ELECTRONICALLY.

DATE PREPARED 9/29/2016

ROUTE	STATE
I-55	MO
DISTRICT	SHEET NO.
SL	56

COUNTY JEFFERSON
JOB NO. J6I3131
CONTRACT ID.
PROJECT NO.
BRIDGE NO.

DATE	DESCRIPTION

IF A SEAL IS PRESENT ON THIS SHEET IT HAS BEEN ELECTRONICALLY SEALED AND DATED.

MISSOURI HIGHWAYS AND TRANSPORTATION COMMISSION
105 WEST CAPITOL
JEFFERSON CITY, MO 65102
1-888-ASK-MODOT (1-888-275-6636)

TRAFFIC CONTROL
STAGE 3A NB
SHEET 51 OF 76

DISCLAIMER
THE PROFESSIONAL WHOSE SIGNATURE AND PERSONAL SEAL APPEAR HEREON ASSUMES RESPONSIBILITY ONLY FOR WHAT APPEARS ON THIS PAGE, AND DISCLAIMS (PURSUANT TO SECTION 327.411 RSMO) SPECIFICATION, ESTIMATES, REPORTS, OR OTHER DOCUMENTS OR INSTRUMENTS NOT SEALED BY THE UNDERSIGNED PROFESSIONAL RELATING TO OR INTENDED TO BE USED FOR ANY PART OR PARTS OF THE PROJECT TO WHICH THIS PAGE REFERS.

TRAFFIC CONTROL LEGEND

- SIGN (SINGLE SIDED)
- CHANNELIZER (TRIM-LINE)
- DIRECTION INDICATOR BARRICADE
- TEMPORARY TRAFFIC BARRIER
- CHANGEABLE MESSAGE SIGN
- IMPACT ATTENUATOR
- TYPE III MOVABLE BARRICADE

LEGEND

	BRIDGE REHABILITATION WORK
4" TSW	TEMPORARY SOLID WHITE TAPE
4" TIW	TEMPORARY INTERMITTENT WHITE TAPE
4" TSY	TEMPORARY SOLID YELLOW TAPE

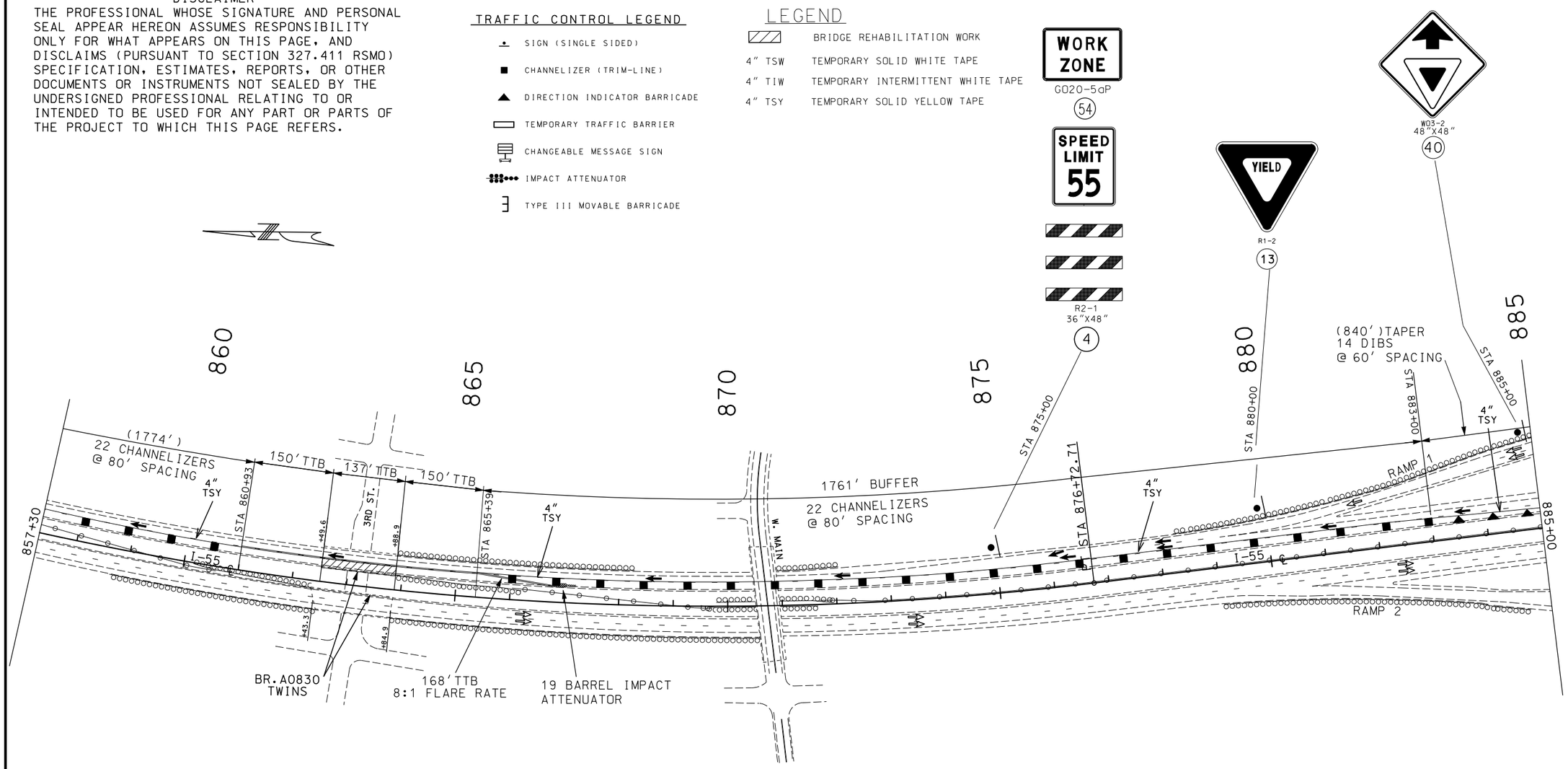

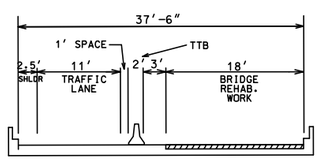

TYPICAL AT BRIDGE A830 (NB I-55) REHABILITATION
STA 862+49.6 TO 863+88.9 (I-55 ℄)

(IN DIRECTION OF INCREASING STATIONING)

STAGE 3A NB

BRIDGE REHABILITATION WORK

NOTE:
TEMPORARY TRAFFIC CONTROL SHOWN ON COMBINATION PROJECT J6I3110 WILL BE PAID FOR ON THIS PROJECT. J6I3110 TEMPORARY TRAFFIC CONTROL IS FOR INFORMATIONAL USE ONLY.

SCALE
0 100 200 300 400 500

STATE OF MISSOURI
SHIRLEY J. NORRIS
NUMBER PE-28779
PROFESSIONAL ENGINEER
THIS SHEET HAS BEEN SIGNED, SEALED AND DATED ELECTRONICALLY.

DATE PREPARED	
9/29/2016	
ROUTE I-55	STATE MO
DISTRICT SL	SHEET NO. 57
COUNTY JEFFERSON	
JOB NO. J6I3131	
CONTRACT ID.	
PROJECT NO.	
BRIDGE NO.	

DESCRIPTION

DATE

MISSOURI HIGHWAYS AND TRANSPORTATION COMMISSION
105 WEST CAPITOL
JEFFERSON CITY, MO 65102
1-888-ASK-MODOT (1-888-275-6636)

IF A SEAL IS PRESENT ON THIS SHEET IT HAS BEEN ELECTRONICALLY SEALED AND DATED.

TRAFFIC CONTROL
STAGE 3A NB
SHEET 52 OF 76

TRAFFIC CONTROL LEGEND

- SIGN (SINGLE SIDED)
- CHANNELIZER (TRIM-LINE)
- DIRECTION INDICATOR BARRICADE
- TEMPORARY TRAFFIC BARRIER
- CHANGEABLE MESSAGE SIGN
- IMPACT ATTENUATOR
- TYPE III MOVABLE BARRICADE

LEGEND

4" TSW	TEMPORARY SOLID WHITE TAPE
4" TIW	TEMPORARY INTERMITTENT WHITE TAPE
4" TSY	TEMPORARY SOLID YELLOW TAPE

SHOWN TEMP. TRAFFIC CONTROL SIGNS AND DEVICES TO BE RELOCATED FROM PRIOR STAGE AT NO DIRECT PAY

DISCLAIMER
THE PROFESSIONAL WHOSE SIGNATURE AND PERSONAL SEAL APPEAR HEREON ASSUMES RESPONSIBILITY ONLY FOR WHAT APPEARS ON THIS PAGE, AND DISCLAIMS (PURSUANT TO SECTION 327.411 RSMO) SPECIFICATION, ESTIMATES, REPORTS, OR OTHER DOCUMENTS OR INSTRUMENTS NOT SEALED BY THE UNDERSIGNED PROFESSIONAL RELATING TO OR INTENDED TO BE USED FOR ANY PART OR PARTS OF THE PROJECT TO WHICH THIS PAGE REFERS.

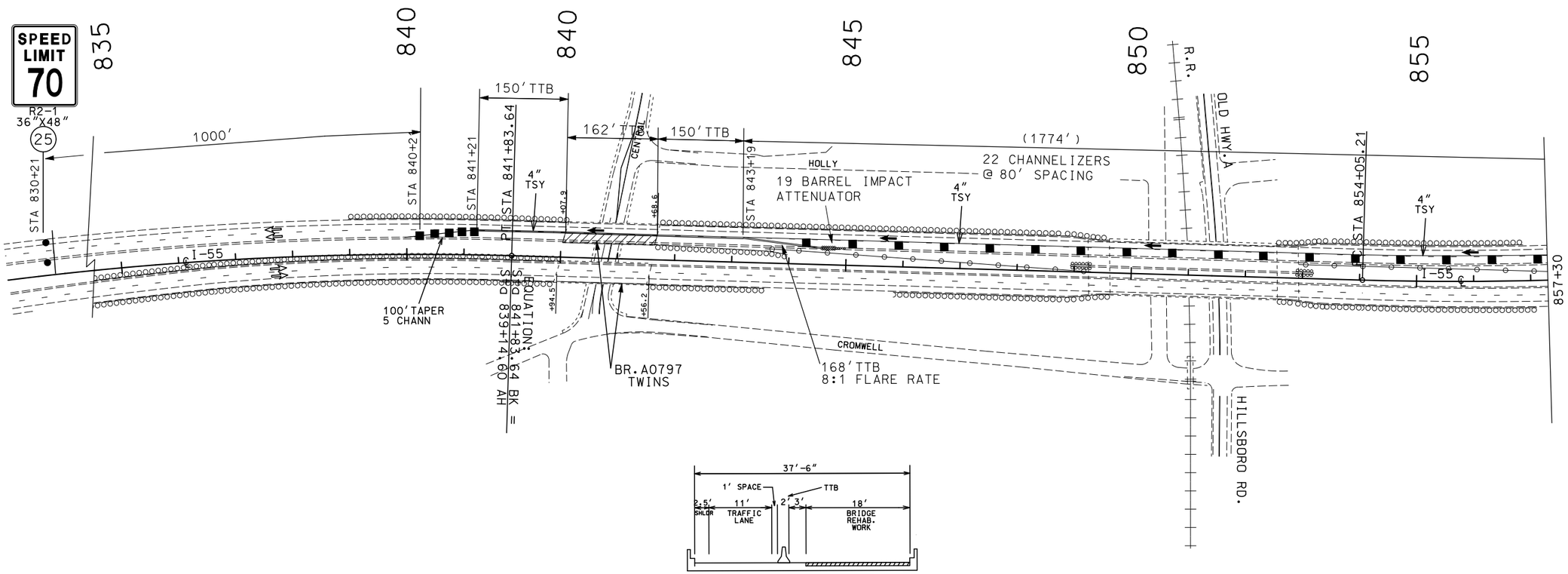

TYPICAL AT BRIDGE A797 (NB I-55) REHABILITATION
STA 840+07.9 TO 841+68.6 (I-55 ℄)

(IN DIRECTION OF INCREASING STATIONING)

STAGE 3A NB

NOTE:
TEMPORARY TRAFFIC CONTROL SHOWN ON COMBINATION PROJECT J6I3110 WILL BE PAID FOR ON THIS PROJECT. J6I3110 TEMPORARY TRAFFIC CONTROL IS FOR INFORMATIONAL USE ONLY.

BRIDGE REHABILITATION WORK

SCALE
0 100 200 300 400 500

STATE OF MISSOURI
SHIRLEY J. NORRIS
NUMBER PE-28779
PROFESSIONAL ENGINEER
THIS SHEET HAS BEEN SIGNED, SEALED AND DATED ELECTRONICALLY.

DATE PREPARED	9/29/2016
ROUTE	I-55
STATE	MO
DISTRICT	SL
SHEET NO.	58
COUNTY	JEFFERSON
JOB NO.	J6I3131
CONTRACT ID.	
PROJECT NO.	
BRIDGE NO.	

DESCRIPTION
DATE

IF A SEAL IS PRESENT ON THIS SHEET IT HAS BEEN ELECTRONICALLY SEALED AND DATED.

MISSOURI HIGHWAYS AND TRANSPORTATION COMMISSION
105 WEST CAPITOL
JEFFERSON CITY, MO 65102
1-888-ASK-MODOT (1-888-275-6636)

TRAFFIC CONTROL
STAGE 3A NB
SHEET 53 OF 76

LEGEND

	BRIDGE REHABILITATION WORK
4" TSW	TEMPORARY SOLID WHITE TAPE
4" TIW	TEMPORARY INTERMITTENT WHITE TAPE
4" TSY	TEMPORARY SOLID YELLOW TAPE

NOTE:
TEMPORARY TRAFFIC CONTROL SHOWN ON COMBINATION PROJECT J6I3110 WILL BE PAID FOR ON THIS PROJECT. J6I3110 TEMPORARY TRAFFIC CONTROL IS FOR INFORMATIONAL USE ONLY.

ADD ROAD WORK AHEAD SIGNS WITH ADVANCED WARNING RAIL SYSTEM AT 2 & 5 MILE INTERVAL BEFORE ADVANCED WARNING SIGNS

NOTE:
SEE TCP SHEET 74 OF 76 FOR DYNAMIC ZIPPER MERGE SYSTEM DETAILS AND SIGNING.

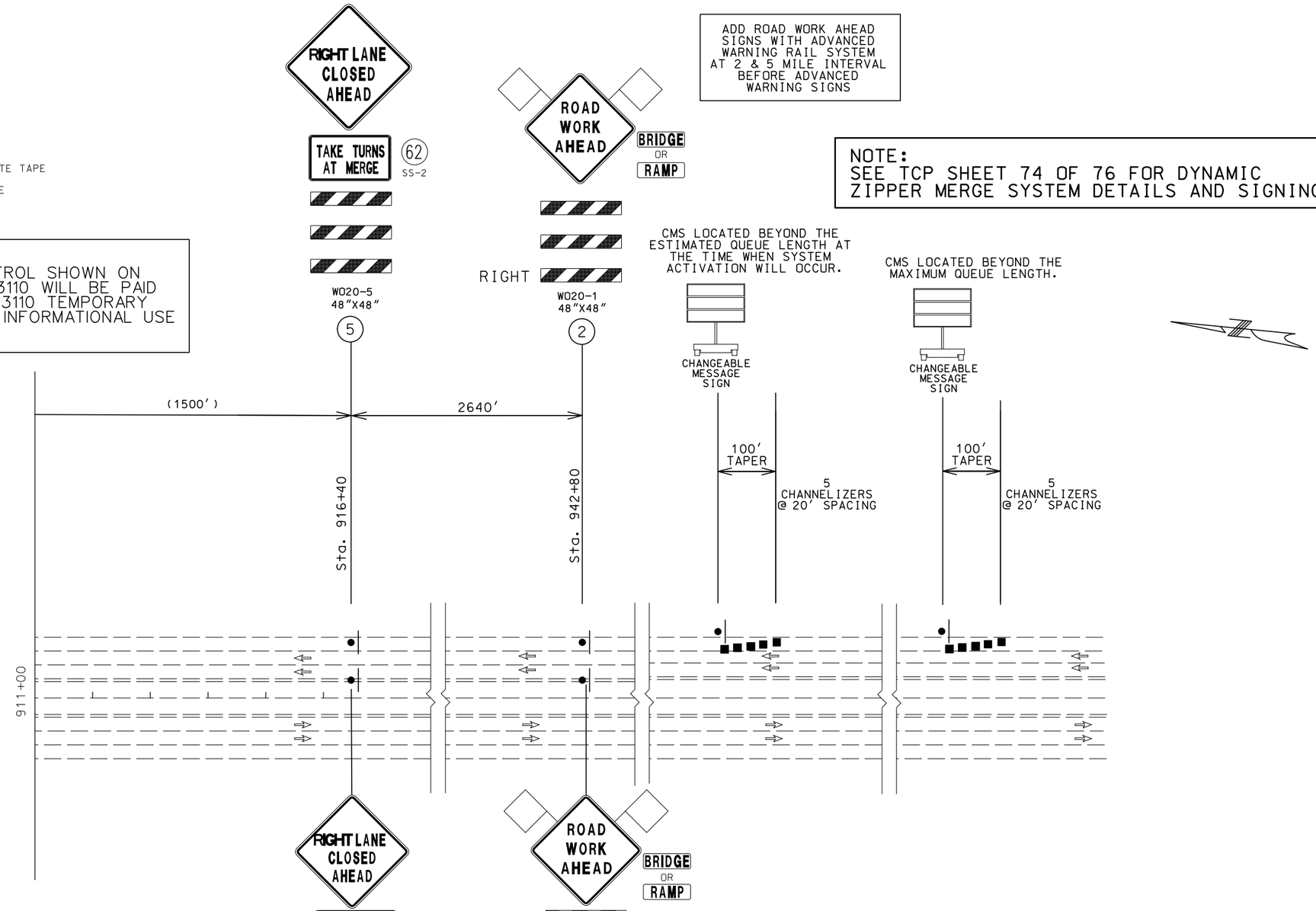

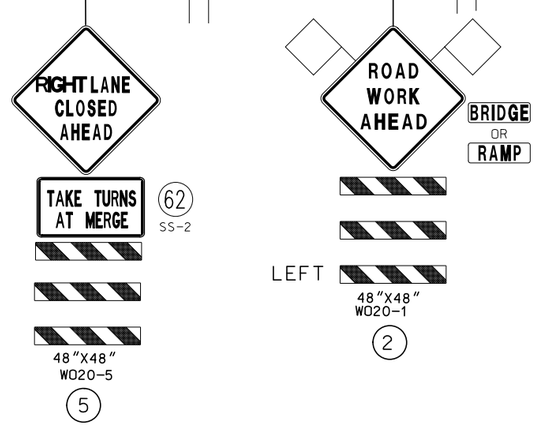

DISCLAIMER
THE PROFESSIONAL WHOSE SIGNATURE AND PERSONAL SEAL APPEAR HEREON ASSUMES RESPONSIBILITY ONLY FOR WHAT APPEARS ON THIS PAGE, AND DISCLAIMS (PURSUANT TO SECTION 327.411 RSMO) SPECIFICATION, ESTIMATES, REPORTS, OR OTHER DOCUMENTS OR INSTRUMENTS NOT SEALED BY THE UNDERSIGNED PROFESSIONAL RELATING TO OR INTENDED TO BE USED FOR ANY PART OR PARTS OF THE PROJECT TO WHICH THIS PAGE REFERS.

NOTE:
SHOWN TEMP.TRAFFIC CONTROL SIGNS AND DEVICES TO BE RELOCATED FROM PRIOR STAGE AT NO DIRECT PAY

SCALE
0 100 200 300 400 500

TRAFFIC CONTROL LEGEND

- SIGN (SINGLE SIDED)
- CHANNELIZER (TRIM-LINE)
- DIRECTION INDICATOR BARRICADE
- TEMPORARY TRAFFIC BARRIER
- CHANGEABLE MESSAGE SIGN
- IMPACT ATTENUATOR
- TYPE III MOVABLE BARRICADE

STATE OF MISSOURI
SHIRLEY J. NORRIS
NUMBER PE-28779
PROFESSIONAL ENGINEER
THIS SHEET HAS BEEN SIGNED, SEALED AND DATED ELECTRONICALLY.

IF A SEAL IS PRESENT ON THIS SHEET IT HAS BEEN ELECTRONICALLY SEALED AND DATED.

DATE	DESCRIPTION

DATE PREPARED: 9/29/2016

ROUTE	STATE
I-55	MO
DISTRICT	SHEET NO.
SL	59

COUNTY: JEFFERSON
JOB NO.: J6I3131
CONTRACT ID.
PROJECT NO.
BRIDGE NO.

MISSOURI HIGHWAYS AND TRANSPORTATION COMMISSION
105 WEST CAPITOL
JEFFERSON CITY, MO 65102
1-888-ASK-MODOT (1-888-275-6636)

TRAFFIC CONTROL
STAGE 3B NB
SHEET 54 OF 76

DISCLAIMER
THE PROFESSIONAL WHOSE SIGNATURE AND PERSONAL SEAL APPEAR HEREON ASSUMES RESPONSIBILITY ONLY FOR WHAT APPEARS ON THIS PAGE, AND DISCLAIMS (PURSUANT TO SECTION 327.411 RSMO) SPECIFICATION, ESTIMATES, REPORTS, OR OTHER DOCUMENTS OR INSTRUMENTS NOT SEALED BY THE UNDERSIGNED PROFESSIONAL RELATING TO OR INTENDED TO BE USED FOR ANY PART OR PARTS OF THE PROJECT TO WHICH THIS PAGE REFERS.

NOTE:
SEE TCP SHEET 74 OF 76 FOR DYNAMIC ZIPPER MERGE SYSTEM DETAILS AND SIGNING

TRAFFIC CONTROL LEGEND

- SIGN (SINGLE SIDED)
- CHANNELIZER (TRIM-LINE)
- DIRECTION INDICATOR BARRICADE
- TEMPORARY TRAFFIC BARRIER
- CHANGEABLE MESSAGE SIGN
- IMPACT ATTENUATOR
- TYPE III MOVABLE BARRICADE
- FLASHING ARROW PANEL

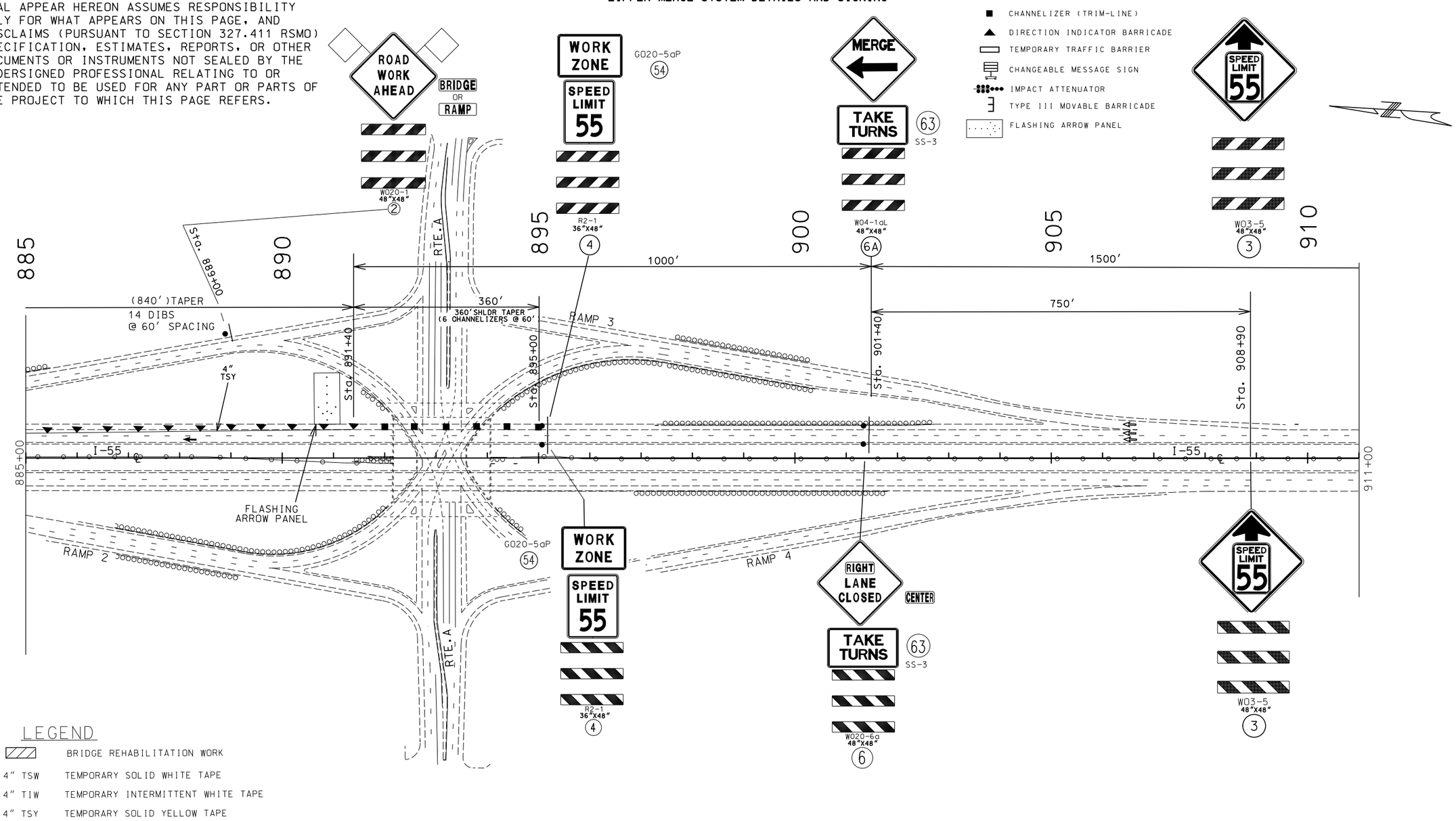

LEGEND

▨	BRIDGE REHABILITATION WORK
4" TSW	TEMPORARY SOLID WHITE TAPE
4" TIW	TEMPORARY INTERMITTENT WHITE TAPE
4" TSY	TEMPORARY SOLID YELLOW TAPE

NOTE:
TEMPORARY TRAFFIC CONTROL SHOWN ON COMBINATION PROJECT J6I3110 WILL BE PAID FOR ON THIS PROJECT. J6I3110 TEMPORARY TRAFFIC CONTROL IS FOR INFORMATIONAL USE ONLY.

NOTE:
SHOWN TEMP. TRAFFIC CONTROL SIGNS AND DEVICES TO BE RELOCATED FROM PRIOR STAGE AT NO DIRECT PAY

SCALE
0 100 200 300 400 500

STATE OF MISSOURI
SHIRLEY J. NORRIS
NUMBER PE-28779
PROFESSIONAL ENGINEER
THIS SHEET HAS BEEN SIGNED, SEALED AND DATED ELECTRONICALLY.

DATE PREPARED	
9/29/2016	
ROUTE I-55	STATE MO
DISTRICT SL	SHEET NO. 60
COUNTY JEFFERSON	
JOB NO. J6I3131	
CONTRACT ID.	
PROJECT NO.	
BRIDGE NO.	

DATE	DESCRIPTION

IF A SEAL IS PRESENT ON THIS SHEET IT HAS BEEN ELECTRONICALLY SEALED AND DATED.

MISSOURI HIGHWAYS AND TRANSPORTATION COMMISSION
105 WEST CAPITOL
JEFFERSON CITY, MO 65102
1-888-ASK-MODOT (1-888-275-6636)

TRAFFIC CONTROL
STAGE 3B NB
SHEET 55 OF 76

DISCLAIMER
THE PROFESSIONAL WHOSE SIGNATURE AND PERSONAL SEAL APPEAR HEREON ASSUMES RESPONSIBILITY ONLY FOR WHAT APPEARS ON THIS PAGE, AND DISCLAIMS (PURSUANT TO SECTION 327.411 RSMO) SPECIFICATION, ESTIMATES, REPORTS, OR OTHER DOCUMENTS OR INSTRUMENTS NOT SEALED BY THE UNDERSIGNED PROFESSIONAL RELATING TO OR INTENDED TO BE USED FOR ANY PART OR PARTS OF THE PROJECT TO WHICH THIS PAGE REFERS.

TRAFFIC CONTROL LEGEND

- SIGN (SINGLE SIDED)
- CHANNELIZER (TRIM-LINE)
- DIRECTION INDICATOR BARRICADE
- TEMPORARY TRAFFIC BARRIER
- CHANGEABLE MESSAGE SIGN
- IMPACT ATTENUATOR
- TYPE III MOVABLE BARRICADE

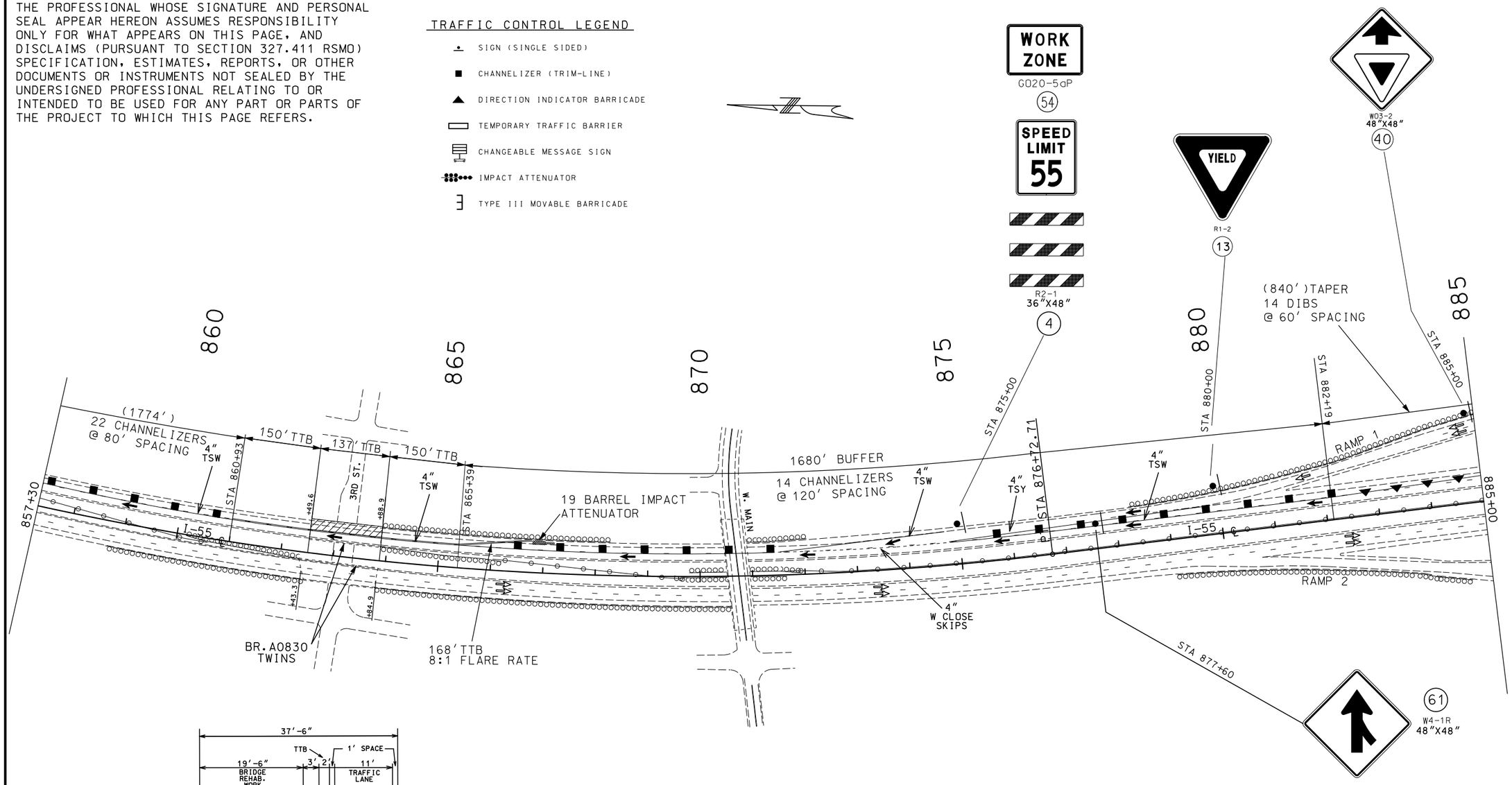

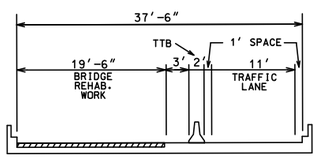

TYPICAL AT BRIDGE A830 (NB I-55) REHABILITATION
STA 862+49.6 TO 863+88.9 (I-55 ℄)

(IN DIRECTION OF INCREASING STATIONING)

STAGE 3B NB

BRIDGE REHABILITATION WORK

LEGEND

	BRIDGE REHABILITATION WORK
4" TSW	TEMPORARY SOLID WHITE TAPE
4" TIW	TEMPORARY INTERMITTENT WHITE TAPE
4" TSY	TEMPORARY SOLID YELLOW TAPE

SHOWN TEMP. TRAFFIC CONTROL SIGNS AND DEVICES TO BE RELOCATED FROM PRIOR STAGE AT NO DIRECT PAY

NOTE:
TEMPORARY TRAFFIC CONTROL SHOWN ON COMBINATION PROJECT J6I3110 WILL BE PAID FOR ON THIS PROJECT. J6I3110 TEMPORARY TRAFFIC CONTROL IS FOR INFORMATIONAL USE ONLY.

SCALE
0 100 200 300 400 500

STATE OF MISSOURI
SHIRLEY J. NORRIS
NUMBER PE-28779
PROFESSIONAL ENGINEER
THIS SHEET HAS BEEN SIGNED, SEALED AND DATED ELECTRONICALLY.

DATE PREPARED	9/29/2016
ROUTE	I-55
STATE	MO
DISTRICT	SL
SHEET NO.	61
COUNTY	JEFFERSON
JOB NO.	J6I3131
CONTRACT ID.	
PROJECT NO.	
BRIDGE NO.	

DATE | DESCRIPTION

MISSOURI HIGHWAYS AND TRANSPORTATION COMMISSION
105 WEST CAPITOL
JEFFERSON CITY, MO 65102
1-888-ASK-MODOT (1-888-275-6636)

IF A SEAL IS PRESENT ON THIS SHEET IT HAS BEEN ELECTRONICALLY SEALED AND DATED.

TRAFFIC CONTROL
STAGE 3B NB

SHEET 56 OF 76

TRAFFIC CONTROL LEGEND

- SIGN (SINGLE SIDED)
- CHANNELIZER (TRIM-LINE)
- DIRECTION INDICATOR BARRICADE
- TEMPORARY TRAFFIC BARRIER
- CHANGEABLE MESSAGE SIGN
- IMPACT ATTENUATOR
- TYPE III MOVABLE BARRICADE

LEGEND

4" TSW	TEMPORARY SOLID WHITE TAPE
4" TIW	TEMPORARY INTERMITTENT WHITE TAPE
4" TSY	TEMPORARY SOLID YELLOW TAPE

SHOWN TEMP. TRAFFIC CONTROL SIGNS AND DEVICES TO BE RELOCATED FROM PRIOR STAGE AT NO DIRECT PAY

DISCLAIMER
THE PROFESSIONAL WHOSE SIGNATURE AND PERSONAL SEAL APPEAR HEREON ASSUMES RESPONSIBILITY ONLY FOR WHAT APPEARS ON THIS PAGE, AND DISCLAIMS (PURSUANT TO SECTION 327.411 RSMO) SPECIFICATION, ESTIMATES, REPORTS, OR OTHER DOCUMENTS OR INSTRUMENTS NOT SEALED BY THE UNDERSIGNED PROFESSIONAL RELATING TO OR INTENDED TO BE USED FOR ANY PART OR PARTS OF THE PROJECT TO WHICH THIS PAGE REFERS.

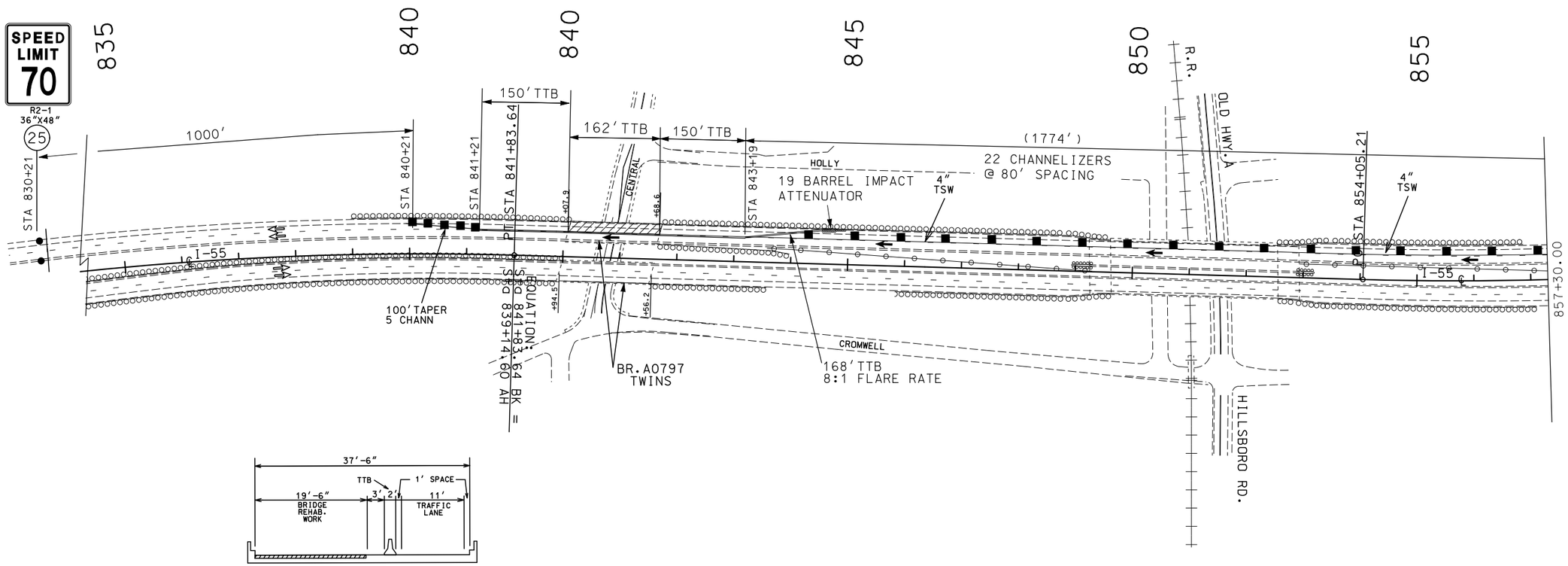

TYPICAL AT BRIDGE A830 (NB I-55) REHABILITATION
STA 840+07.9 TO 841+68.6 (I-55 ℄)

(IN DIRECTION OF INCREASING STATIONING)

STAGE 3B NB

NOTE:
TEMPORARY TRAFFIC CONTROL SHOWN ON COMBINATION PROJECT J6I3110 WILL BE PAID FOR ON THIS PROJECT. J6I3110 TEMPORARY TRAFFIC CONTROL IS FOR INFORMATIONAL USE ONLY.

BRIDGE REHABILITATION WORK

SCALE
0 100 200 300 400 500

STATE OF MISSOURI
SHIRLEY J. NORRIS
NUMBER PE-28779
PROFESSIONAL ENGINEER
THIS SHEET HAS BEEN SIGNED, SEALED AND DATED ELECTRONICALLY.

DATE PREPARED	9/29/2016
ROUTE	I-55
STATE	MO
DISTRICT	SL
SHEET NO.	62
COUNTY	JEFFERSON
JOB NO.	J6I3131
CONTRACT ID.	
PROJECT NO.	
BRIDGE NO.	

DESCRIPTION
DATE

IF A SEAL IS PRESENT ON THIS SHEET IT HAS BEEN ELECTRONICALLY SEALED AND DATED.

MISSOURI HIGHWAYS AND TRANSPORTATION COMMISSION
105 WEST CAPITOL
JEFFERSON CITY, MO 65102
1-888-ASK-MODOT (1-888-275-6636)

TRAFFIC CONTROL

STAGE 3B NB

SHEET 57 OF 76

TRAFFIC CONTROL LEGEND

- SIGN (SINGLE SIDED)
- CHANNELIZER (TRIM-LINE)
- DIRECTION INDICATOR BARRICADE
- TEMPORARY TRAFFIC BARRIER
- CHANGEABLE MESSAGE SIGN
- IMPACT ATTENUATOR
- TYPE III MOVABLE BARRICADE
- FLASHING ARROW PANEL

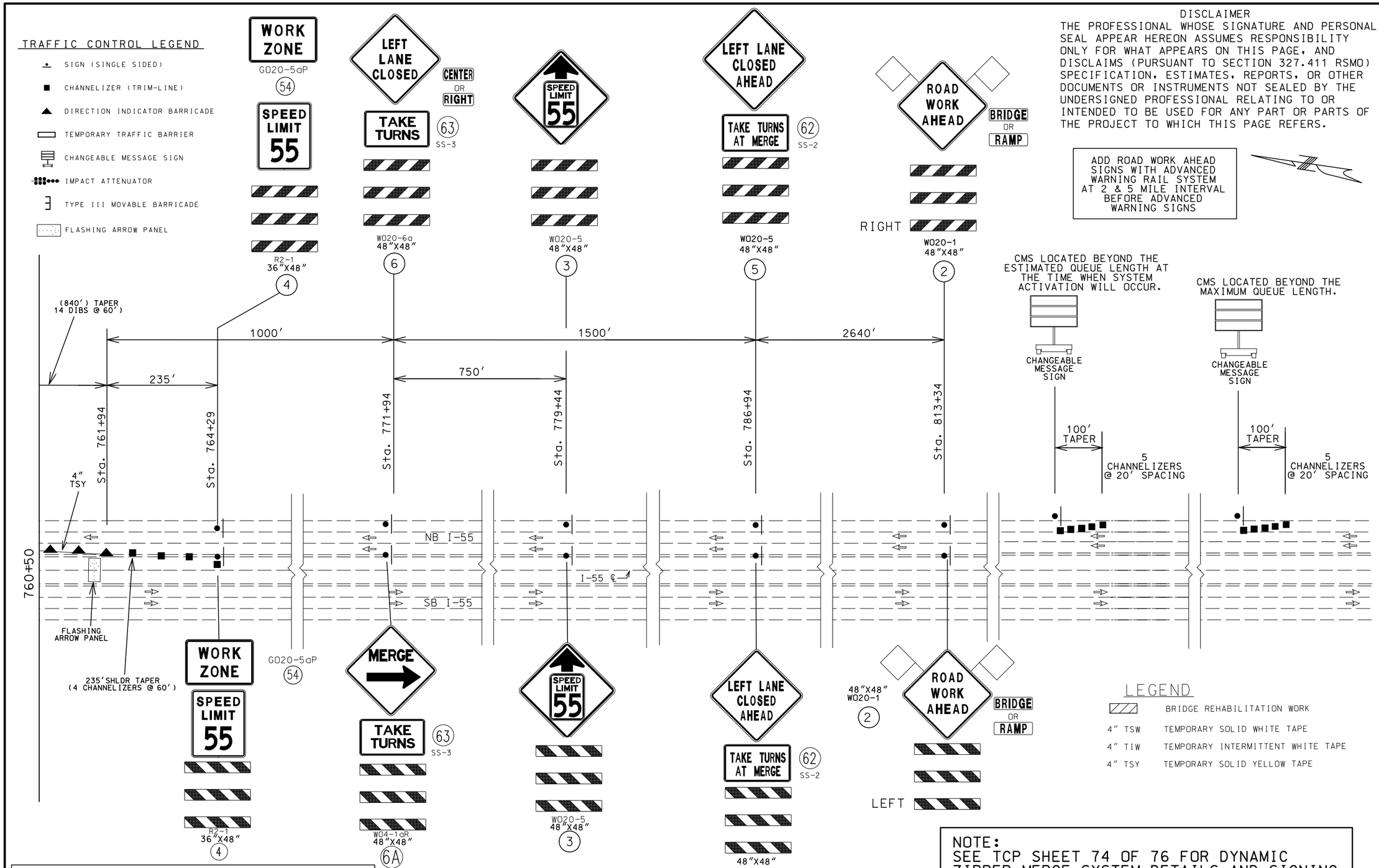

DISCLAIMER

THE PROFESSIONAL WHOSE SIGNATURE AND PERSONAL SEAL APPEAR HEREON ASSUMES RESPONSIBILITY ONLY FOR WHAT APPEARS ON THIS PAGE, AND DISCLAIMS (PURSUANT TO SECTION 327.411 RSMO) SPECIFICATION, ESTIMATES, REPORTS, OR OTHER DOCUMENTS OR INSTRUMENTS NOT SEALED BY THE UNDERSIGNED PROFESSIONAL RELATING TO OR INTENDED TO BE USED FOR ANY PART OR PARTS OF THE PROJECT TO WHICH THIS PAGE REFERS.

ADD ROAD WORK AHEAD SIGNS WITH ADVANCED WARNING RAIL SYSTEM AT 2 & 5 MILE INTERVAL BEFORE ADVANCED WARNING SIGNS

LEGEND

	BRIDGE REHABILITATION WORK
4" TSW	TEMPORARY SOLID WHITE TAPE
4" TIW	TEMPORARY INTERMITTENT WHITE TAPE
4" TSY	TEMPORARY SOLID YELLOW TAPE

NOTE:
TEMPORARY TRAFFIC CONTROL SHOWN ON COMBINATION PROJECT J6I3110 WILL BE PAID FOR ON THIS PROJECT. J6I3110 TEMPORARY TRAFFIC CONTROL IS FOR INFORMATIONAL USE ONLY.

NOTE:
SHOWN TEMP. TRAFFIC CONTROL SIGNS AND DEVICES TO BE RELOCATED FROM PRIOR STAGE AT NO DIRECT PAY

NOTE:
SEE TCP SHEET 74 OF 76 FOR DYNAMIC ZIPPER MERGE SYSTEM DETAILS AND SIGNING.

NOT TO SCALE

STATE OF MISSOURI
SHIRLEY J. NORRIS
NUMBER PE-28779
PROFESSIONAL ENGINEER
THIS SHEET HAS BEEN SIGNED, SEALED AND DATED ELECTRONICALLY.

DATE PREPARED	9/29/2016
ROUTE	I-55
STATE	MO
DISTRICT	SL
SHEET NO.	63
COUNTY	JEFFERSON
JOB NO.	J6I3131
CONTRACT ID.	
PROJECT NO.	
BRIDGE NO.	

DATE	DESCRIPTION

IF A SEAL IS PRESENT ON THIS SHEET IT HAS BEEN ELECTRONICALLY SEALED AND DATED.

MISSOURI HIGHWAYS AND TRANSPORTATION COMMISSION
105 WEST CAPITOL
JEFFERSON CITY, MO 65102
1-888-ASK-MODOT (1-888-275-6636)

TRAFFIC CONTROL
STAGE 4A NB
SHEET 58 OF 76

SHOWN TEMP. TRAFFIC CONTROL SIGNS AND DEVICES TO BE RELOCATED FROM PRIOR STAGE AT NO DIRECT PAY.

DISCLAIMER
THE PROFESSIONAL WHOSE SIGNATURE AND PERSONAL SEAL APPEAR HEREON ASSUMES RESPONSIBILITY ONLY FOR WHAT APPEARS ON THIS PAGE, AND DISCLAIMS (PURSUANT TO SECTION 327.411 RSMO) SPECIFICATION, ESTIMATES, REPORTS, OR OTHER DOCUMENTS OR INSTRUMENTS NOT SEALED BY THE UNDERSIGNED PROFESSIONAL RELATING TO OR INTENDED TO BE USED FOR ANY PART OR PARTS OF THE PROJECT TO WHICH THIS PAGE REFERS.

TRAFFIC CONTROL LEGEND

- SIGN (SINGLE SIDED)
- CHANNELIZER (TRIM-LINE)
- DIRECTION INDICATOR BARRICADE
- TEMPORARY TRAFFIC BARRIER
- CHANGEABLE MESSAGE SIGN
- IMPACT ATTENUATOR
- TYPE III MOVABLE BARRICADE

LEGEND

4" TSW	TEMPORARY SOLID WHITE TAPE
4" TIW	TEMPORARY INTERMITTENT WHITE TAPE
4" TSY	TEMPORARY SOLID YELLOW TAPE

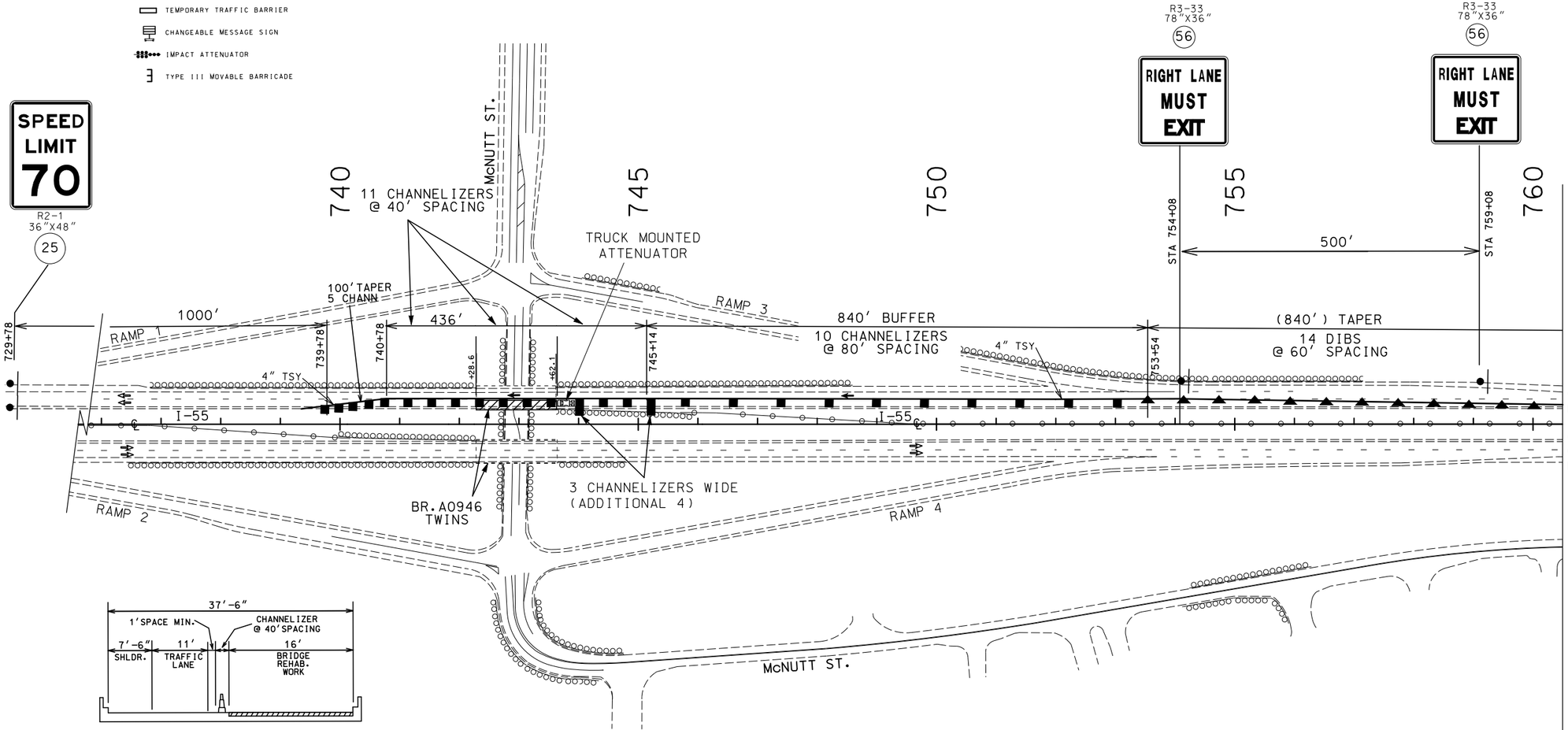

TYPICAL AT BRIDGE A946 (NB I-55) REHABILITATION
STA 742+28.6 TO 743+62.1 (I-55 ℄)
(IN DIRECTION OF INCREASING STATIONING)

STAGE 4A NB

BRIDGE REHABILITATION WORK

NOTE:
TEMPORARY TRAFFIC CONTROL SHOWN ON COMBINATION PROJECT J6I3110 WILL BE PAID FOR ON THIS PROJECT. J6I3110 TEMPORARY TRAFFIC CONTROL IS FOR INFORMATIONAL USE ONLY.

SCALE
0 100 200 300 400 500

STATE OF MISSOURI
SHIRLEY J. NORRIS
NUMBER PE-28779
PROFESSIONAL ENGINEER
THIS SHEET HAS BEEN SIGNED, SEALED AND DATED ELECTRONICALLY.

DATE PREPARED	9/29/2016
ROUTE	I-55
STATE	MO
DISTRICT	SL
SHEET NO.	64
COUNTY	JEFFERSON
JOB NO.	J6I3131
CONTRACT ID.	
PROJECT NO.	
BRIDGE NO.	

DESCRIPTION
DATE

MISSOURI HIGHWAYS AND TRANSPORTATION COMMISSION
105 WEST CAPITOL
JEFFERSON CITY, MO 65102
1-888-ASK-MODOT (1-888-275-6636)

IF A SEAL IS PRESENT ON THIS SHEET IT HAS BEEN ELECTRONICALLY SEALED AND DATED.

TRAFFIC CONTROL
STAGE 4A NB

SHEET 59 OF 76

TRAFFIC CONTROL LEGEND

- SIGN (SINGLE SIDED)
- CHANNELIZER (TRIM-LINE)
- DIRECTION INDICATOR BARRICADE
- TEMPORARY TRAFFIC BARRIER
- CHANGEABLE MESSAGE SIGN
- IMPACT ATTENUATOR
- TYPE III MOVABLE BARRICADE
- FLASHING ARROW PANEL

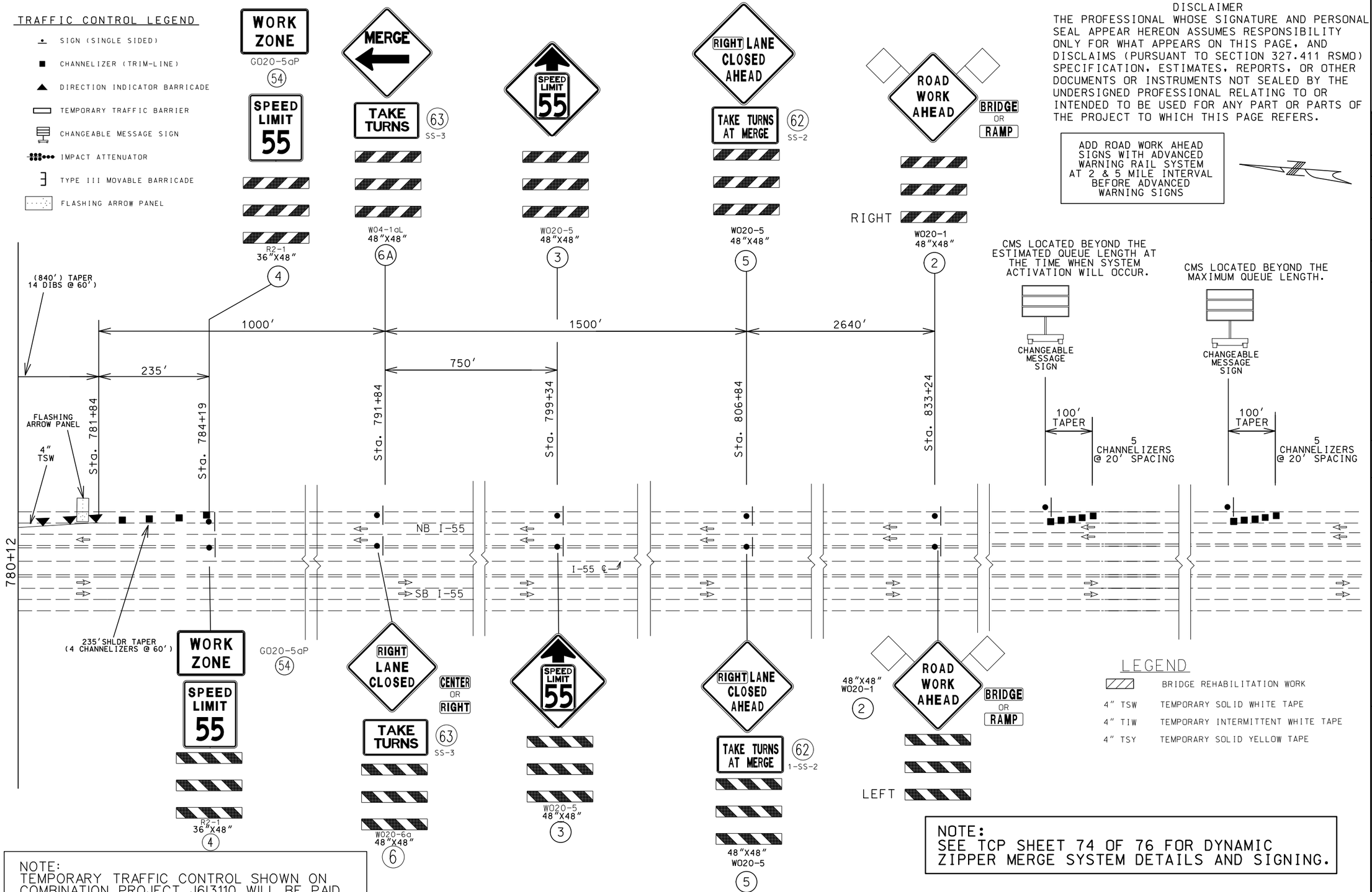

DISCLAIMER

THE PROFESSIONAL WHOSE SIGNATURE AND PERSONAL SEAL APPEAR HEREON ASSUMES RESPONSIBILITY ONLY FOR WHAT APPEARS ON THIS PAGE, AND DISCLAIMS (PURSUANT TO SECTION 327.411 RSMO) SPECIFICATION, ESTIMATES, REPORTS, OR OTHER DOCUMENTS OR INSTRUMENTS NOT SEALED BY THE UNDERSIGNED PROFESSIONAL RELATING TO OR INTENDED TO BE USED FOR ANY PART OR PARTS OF THE PROJECT TO WHICH THIS PAGE REFERS.

ADD ROAD WORK AHEAD SIGNS WITH ADVANCED WARNING RAIL SYSTEM AT 2 & 5 MILE INTERVAL BEFORE ADVANCED WARNING SIGNS

LEGEND

	BRIDGE REHABILITATION WORK
4" TSW	TEMPORARY SOLID WHITE TAPE
4" TIW	TEMPORARY INTERMITTENT WHITE TAPE
4" TSY	TEMPORARY SOLID YELLOW TAPE

NOTE:
TEMPORARY TRAFFIC CONTROL SHOWN ON COMBINATION PROJECT J6I3110 WILL BE PAID FOR ON THIS PROJECT. J6I3110 TEMPORARY TRAFFIC CONTROL IS FOR INFORMATIONAL USE ONLY.

NOTE:
SEE TCP SHEET 74 OF 76 FOR DYNAMIC ZIPPER MERGE SYSTEM DETAILS AND SIGNING.

NOTE:
SHOWN TEMP. TRAFFIC CONTROL SIGNS AND DEVICES TO BE RELOCATED FROM PRIOR STAGE AT NO DIRECT PAY

NOT TO SCALE

STATE OF MISSOURI
SHIRLEY J. NORRIS
NUMBER PE-28779
PROFESSIONAL ENGINEER
THIS SHEET HAS BEEN SIGNED, SEALED AND DATED ELECTRONICALLY.

IF A SEAL IS PRESENT ON THIS SHEET IT HAS BEEN ELECTRONICALLY SEALED AND DATED.

DATE PREPARED	9/29/2016
ROUTE	I-55
STATE	MO
DISTRICT	SL
SHEET NO.	65
COUNTY	JEFFERSON
JOB NO.	J6I3131
CONTRACT ID.	
PROJECT NO.	
BRIDGE NO.	

DATE	DESCRIPTION

MISSOURI HIGHWAYS AND TRANSPORTATION COMMISSION
105 WEST CAPITOL
JEFFERSON CITY, MO 65102
1-888-ASK-MODOT (1-888-275-6636)

TRAFFIC CONTROL
STAGE 4B NB

SHEET 60 OF 76

SHOWN TEMP. TRAFFIC CONTROL SIGNS AND DEVICES TO BE RELOCATED FROM PRIOR STAGE AT NO DIRECT PAY.

LEGEND

4" TSW	TEMPORARY SOLID WHITE TAPE
4" TIW	TEMPORARY INTERMITTENT WHITE TAPE
4" TSY	TEMPORARY SOLID YELLOW TAPE

TRAFFIC CONTROL LEGEND

- SIGN (SINGLE SIDED)
- CHANNELIZER (TRIM-LINE)
- DIRECTION INDICATOR BARRICADE
- TEMPORARY TRAFFIC BARRIER
- CHANGEABLE MESSAGE SIGN
- IMPACT ATTENUATOR
- TYPE III MOVABLE BARRICADE
- WORK ZONE

DISCLAIMER

THE PROFESSIONAL WHOSE SIGNATURE AND PERSONAL SEAL APPEAR HEREON ASSUMES RESPONSIBILITY ONLY FOR WHAT APPEARS ON THIS PAGE, AND DISCLAIMS (PURSUANT TO SECTION 327.411 RSMO) SPECIFICATION, ESTIMATES, REPORTS, OR OTHER DOCUMENTS OR INSTRUMENTS NOT SEALED BY THE UNDERSIGNED PROFESSIONAL RELATING TO OR INTENDED TO BE USED FOR ANY PART OR PARTS OF THE PROJECT TO WHICH THIS PAGE REFERS.

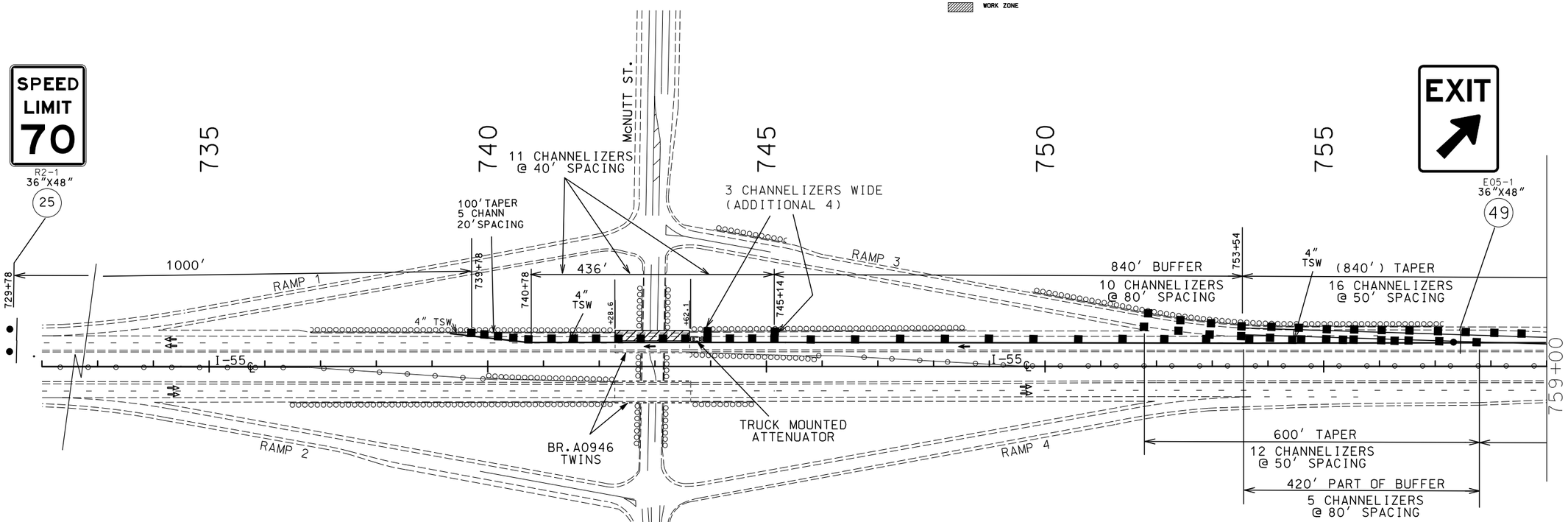

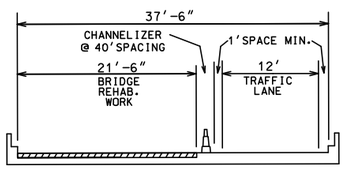

TYPICAL AT BRIDGE A946 (SB I-55) REHABILITATION
STA 742+28.1 TO 743+64.1 (I-55 ℄)
(IN DIRECTION OF INCREASING STATIONING)

STAGE 4B NB

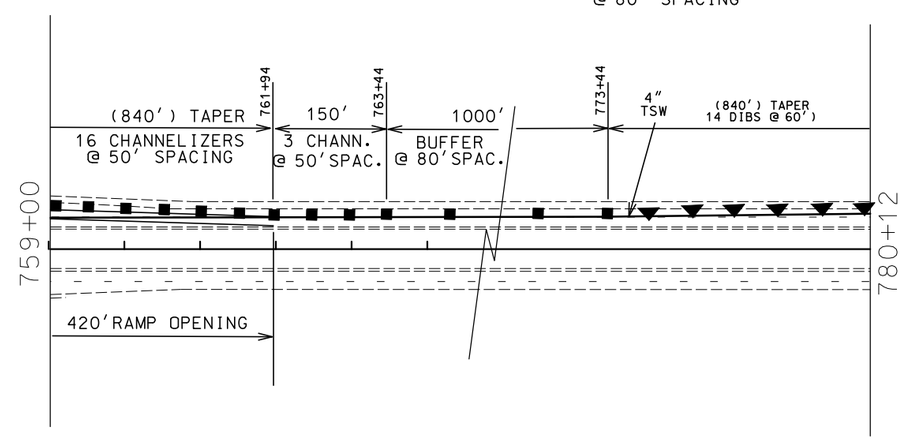

BRIDGE REHABILITATION WORK

NOTE:
TEMPORARY TRAFFIC CONTROL SHOWN ON COMBINATION PROJECT J6I3110 WILL BE PAID FOR ON THIS PROJECT. J6I3110 TEMPORARY TRAFFIC CONTROL IS FOR INFORMATIONAL USE ONLY.

SCALE
0 100 200 300 400 500

STATE OF MISSOURI
SHIRLEY J. NORRIS
NUMBER PE-28779
PROFESSIONAL ENGINEER
THIS SHEET HAS BEEN SIGNED, SEALED AND DATED ELECTRONICALLY.

DATE PREPARED	9/29/2016
ROUTE	I-55
STATE	MO
DISTRICT	SL
SHEET NO.	66
COUNTY	JEFFERSON
JOB NO.	J6I3131
CONTRACT ID.	
PROJECT NO.	
BRIDGE NO.	

DESCRIPTION

DATE

IF A SEAL IS PRESENT ON THIS SHEET IT HAS BEEN ELECTRONICALLY SEALED AND DATED.

MISSOURI HIGHWAYS AND TRANSPORTATION COMMISSION
105 WEST CAPITOL
JEFFERSON CITY, MO 65102
1-888-ASK-MODOT (1-888-275-6636)

TRAFFIC CONTROL

STAGE 4B NB

SHEET 61 OF 76

SHEET LEFT BLANK
INTENTIONALLY

STATE OF MISSOURI
SHIRLEY J. NORRIS
NUMBER PE-28779
PROFESSIONAL ENGINEER

THIS SHEET HAS BEEN SIGNED, SEALED AND DATED ELECTRONICALLY.

DATE PREPARED	9/29/2016
ROUTE	I-55
STATE	MO
DISTRICT	SL
SHEET NO.	67
COUNTY	JEFFERSON
JOB NO.	J6I3131
CONTRACT ID.	
PROJECT NO.	
BRIDGE NO.	

DATE	DESCRIPTION

IF A SEAL IS PRESENT ON THIS SHEET IT HAS BEEN ELECTRONICALLY SEALED AND DATED.

MISSOURI HIGHWAYS AND TRANSPORTATION COMMISSION

105 WEST CAPITOL
JEFFERSON CITY, MO 65102
1-888-ASK-MODOT (1-888-275-6636)

TRAFFIC CONTROL
LEFT BLANK

SHEET 62 OF 76

TRAFFIC CONTROL LEGEND

- SIGN (SINGLE SIDED)
- CHANNELIZER (TRIM-LINE)
- DIRECTION INDICATOR BARRICADE
- TEMPORARY TRAFFIC BARRIER
- CHANGEABLE MESSAGE SIGN
- IMPACT ATTENUATOR
- TYPE III MOVABLE BARRICADE
- FLASHING ARROW PANEL

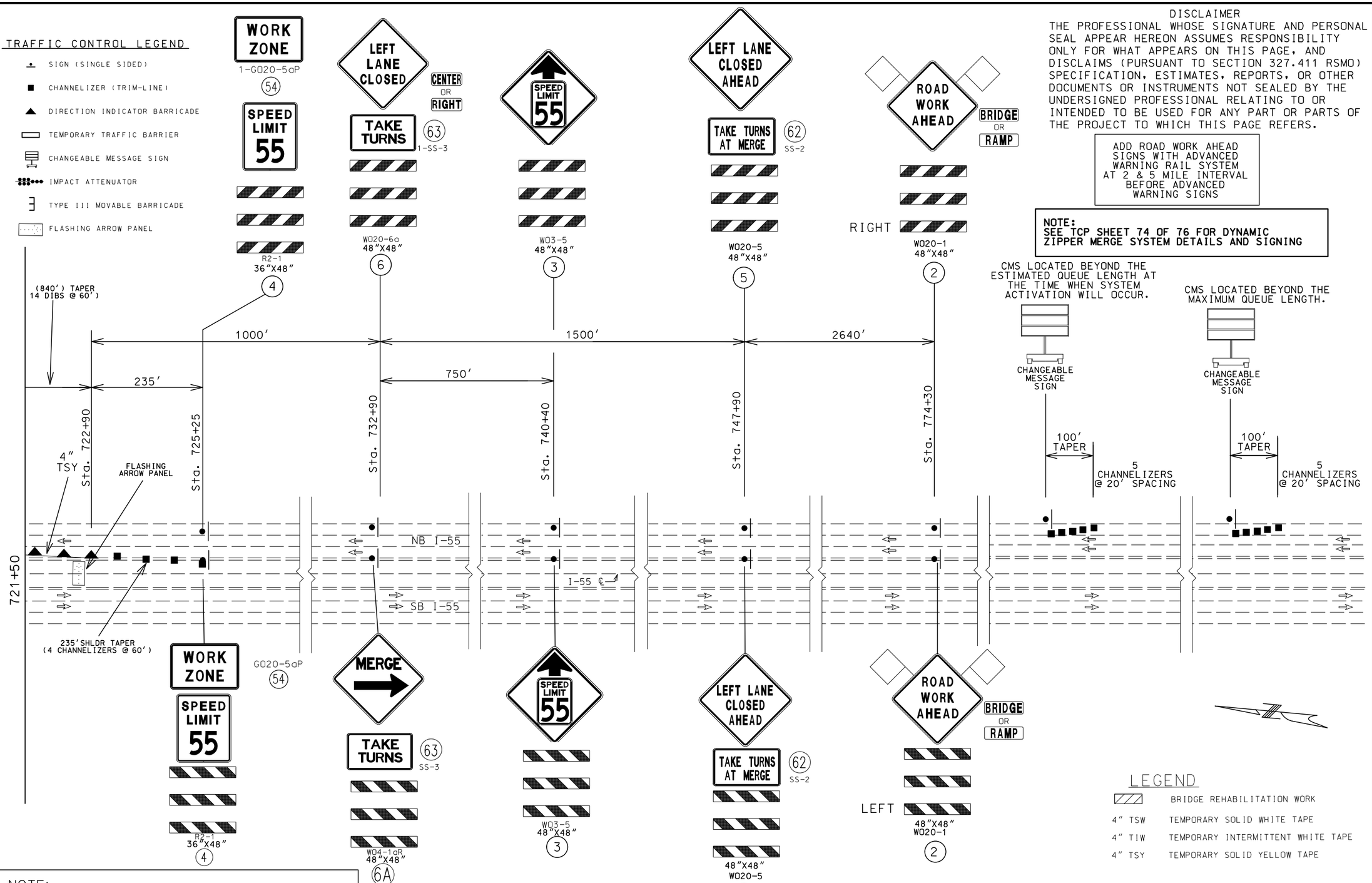

DISCLAIMER

THE PROFESSIONAL WHOSE SIGNATURE AND PERSONAL SEAL APPEAR HEREON ASSUMES RESPONSIBILITY ONLY FOR WHAT APPEARS ON THIS PAGE, AND DISCLAIMS (PURSUANT TO SECTION 327.411 RSMO) SPECIFICATION, ESTIMATES, REPORTS, OR OTHER DOCUMENTS OR INSTRUMENTS NOT SEALED BY THE UNDERSIGNED PROFESSIONAL RELATING TO OR INTENDED TO BE USED FOR ANY PART OR PARTS OF THE PROJECT TO WHICH THIS PAGE REFERS.

ADD ROAD WORK AHEAD SIGNS WITH ADVANCED WARNING RAIL SYSTEM AT 2 & 5 MILE INTERVAL BEFORE ADVANCED WARNING SIGNS

NOTE:
SEE TCP SHEET 74 OF 76 FOR DYNAMIC ZIPPER MERGE SYSTEM DETAILS AND SIGNING

NOTE:
TEMPORARY TRAFFIC CONTROL SHOWN ON COMBINATION PROJECT J6I3110 WILL BE PAID FOR ON THIS PROJECT. J6I3110 TEMPORARY TRAFFIC CONTROL IS FOR INFORMATIONAL USE ONLY.

NOTE:
SHOWN TEMP. TRAFFIC CONTROL SIGNS AND DEVICES TO BE RELOCATED FROM PRIOR STAGE AT NO DIRECT PAY

LEGEND

	BRIDGE REHABILITATION WORK
4" TSW	TEMPORARY SOLID WHITE TAPE
4" TIW	TEMPORARY INTERMITTENT WHITE TAPE
4" TSY	TEMPORARY SOLID YELLOW TAPE

NOT TO SCALE

STATE OF MISSOURI
SHIRLEY J. NORRIS
NUMBER PE-28779
PROFESSIONAL ENGINEER
THIS SHEET HAS BEEN SIGNED, SEALED AND DATED ELECTRONICALLY.

IF A SEAL IS PRESENT ON THIS SHEET IT HAS BEEN ELECTRONICALLY SEALED AND DATED.

DATE PREPARED	
9/29/2016	
ROUTE I-55	STATE MO
DISTRICT SL	SHEET NO. 68
COUNTY JEFFERSON	
JOB NO. J6I3131	
CONTRACT ID.	
PROJECT NO.	
BRIDGE NO.	

DATE	DESCRIPTION

MISSOURI HIGHWAYS AND TRANSPORTATION COMMISSION
105 WEST CAPITOL
JEFFERSON CITY, MO 65102
1-888-ASK-MODOT (1-888-275-6636)

TRAFFIC CONTROL
STAGE 5A NB

SHEET 63 OF 76

TRAFFIC CONTROL LEGEND

- SIGN (SINGLE SIDED)
- CHANNELIZER (TRIM-LINE)
- DIRECTION INDICATOR BARRICADE
- TEMPORARY TRAFFIC BARRIER
- CHANGEABLE MESSAGE SIGN
- IMPACT ATTENUATOR
- TYPE III MOVABLE BARRICADE

LEGEND

4" TSW	TEMPORARY SOLID WHITE TAPE
4" TIW	TEMPORARY INTERMITTENT WHITE TAPE
4" TSY	TEMPORARY SOLID YELLOW TAPE

SHOWN TEMP. TRAFFIC CONTROL SIGNS AND DEVICES TO BE RELOCATED FROM PRIOR STAGE AT NO DIRECT PAY

DISCLAIMER
THE PROFESSIONAL WHOSE SIGNATURE AND PERSONAL SEAL APPEAR HEREON ASSUMES RESPONSIBILITY ONLY FOR WHAT APPEARS ON THIS PAGE, AND DISCLAIMS (PURSUANT TO SECTION 327.411 RSMO) SPECIFICATION, ESTIMATES, REPORTS, OR OTHER DOCUMENTS OR INSTRUMENTS NOT SEALED BY THE UNDERSIGNED PROFESSIONAL RELATING TO OR INTENDED TO BE USED FOR ANY PART OR PARTS OF THE PROJECT TO WHICH THIS PAGE REFERS.

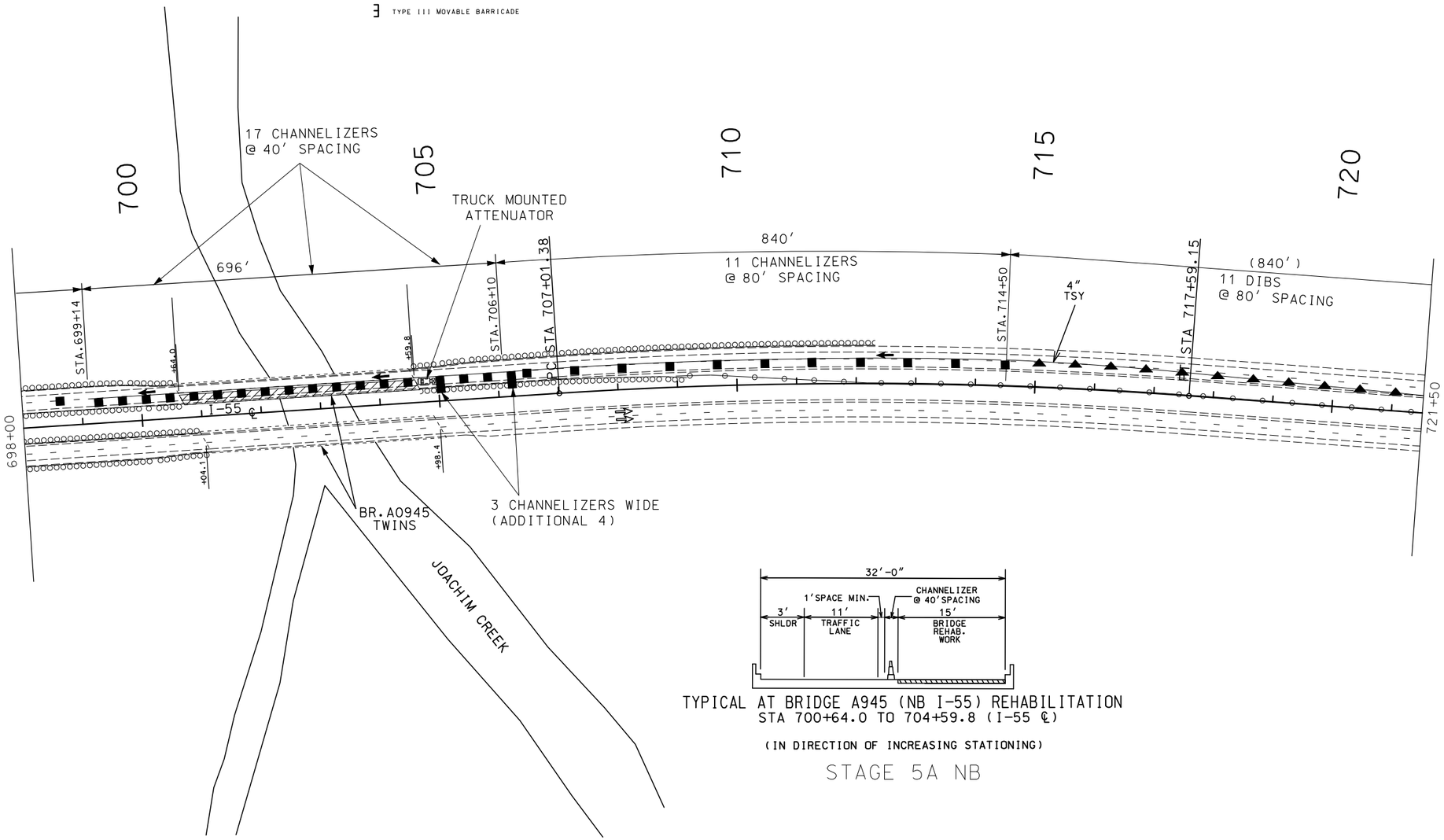

TYPICAL AT BRIDGE A945 (NB I-55) REHABILITATION
STA 700+64.0 TO 704+59.8 (I-55 ℄)

(IN DIRECTION OF INCREASING STATIONING)

STAGE 5A NB

NOTE:
TEMPORARY TRAFFIC CONTROL SHOWN ON COMBINATION PROJECT J6I3110 WILL BE PAID FOR ON THIS PROJECT. J6I3110 TEMPORARY TRAFFIC CONTROL IS FOR INFORMATIONAL USE ONLY.

BRIDGE REHABILITATION WORK

SCALE
0 100 200 300 400 500

STATE OF MISSOURI
SHIRLEY J. NORRIS
NUMBER PE-28779
PROFESSIONAL ENGINEER

THIS SHEET HAS BEEN SIGNED, SEALED AND DATED ELECTRONICALLY.

DATE PREPARED	9/29/2016
ROUTE	I-55
STATE	MO
DISTRICT	SL
SHEET NO.	69
COUNTY	JEFFERSON
JOB NO.	J6I3131
CONTRACT ID.	
PROJECT NO.	
BRIDGE NO.	

DATE	DESCRIPTION

IF A SEAL IS PRESENT ON THIS SHEET IT HAS BEEN ELECTRONICALLY SEALED AND DATED.

MISSOURI HIGHWAYS AND TRANSPORTATION COMMISSION
105 WEST CAPITOL
JEFFERSON CITY, MO 65102
1-888-ASK-MODOT (1-888-275-6636)

TRAFFIC CONTROL
STAGE 5A NB

SHEET 64 OF 76

TRAFFIC CONTROL LEGEND

- SIGN (SINGLE SIDED)
- CHANNELIZER (TRIM-LINE)
- DIRECTION INDICATOR BARRICADE
- TEMPORARY TRAFFIC BARRIER
- CHANGEABLE MESSAGE SIGN
- IMPACT ATTENUATOR
- TYPE III MOVABLE BARRICADE

LEGEND

4" TSW	TEMPORARY SOLID WHITE TAPE
4" TIW	TEMPORARY INTERMITTENT WHITE TAPE
4" TSY	TEMPORARY SOLID YELLOW TAPE

SHOWN TEMP. TRAFFIC CONTROL SIGNS AND DEVICES TO BE RELOCATED FROM PRIOR STAGE AT NO DIRECT PAY

DISCLAIMER
THE PROFESSIONAL WHOSE SIGNATURE AND PERSONAL SEAL APPEAR HEREON ASSUMES RESPONSIBILITY ONLY FOR WHAT APPEARS ON THIS PAGE, AND DISCLAIMS (PURSUANT TO SECTION 327.411 RSMO) SPECIFICATION, ESTIMATES, REPORTS, OR OTHER DOCUMENTS OR INSTRUMENTS NOT SEALED BY THE UNDERSIGNED PROFESSIONAL RELATING TO OR INTENDED TO BE USED FOR ANY PART OR PARTS OF THE PROJECT TO WHICH THIS PAGE REFERS.

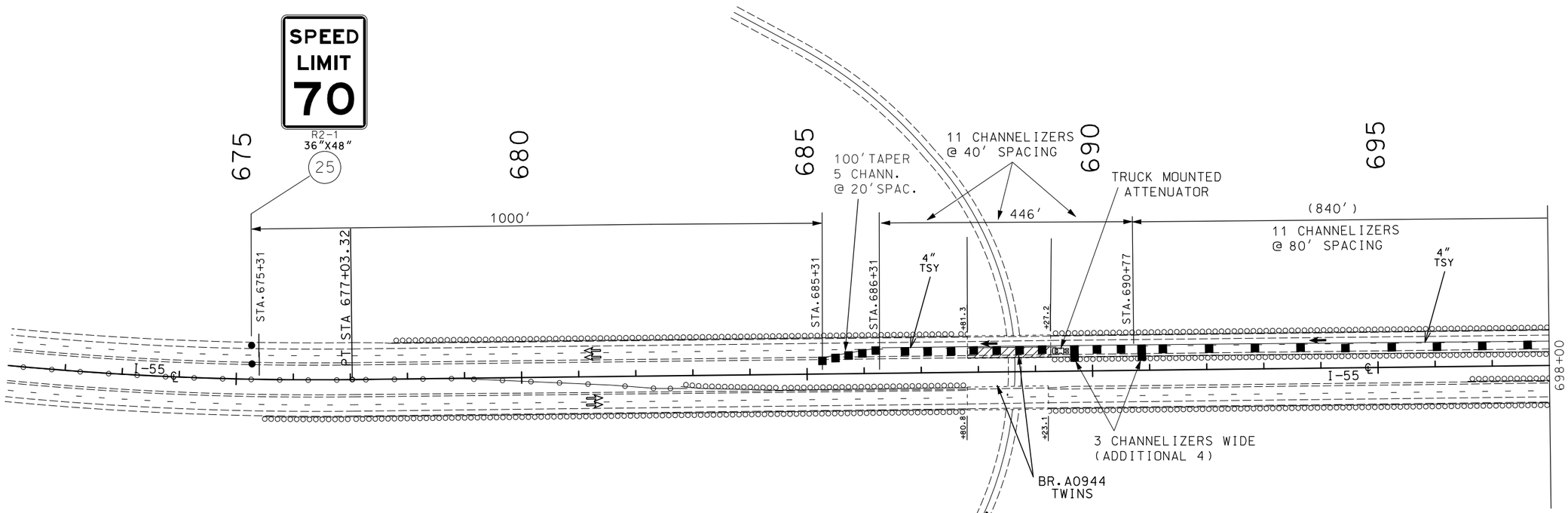

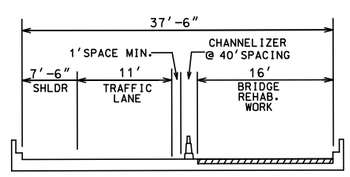

TYPICAL AT BRIDGE A944 (NB I-55) REHABILITATION
STA 687+81.3 TO 689+27.2 (I-55 ℄)

(IN DIRECTION OF INCREASING STATIONING)

STAGE 5A NB

NOTE:
TEMPORARY TRAFFIC CONTROL SHOWN ON COMBINATION PROJECT J6I3110 WILL BE PAID FOR ON THIS PROJECT. J6I3110 TEMPORARY TRAFFIC CONTROL IS FOR INFORMATIONAL USE ONLY.

BRIDGE REHABILITATION WORK

SCALE
0 100 200 300 400 500

STATE OF MISSOURI
SHIRLEY J. NORRIS
NUMBER PE-28779
PROFESSIONAL ENGINEER
THIS SHEET HAS BEEN SIGNED, SEALED AND DATED ELECTRONICALLY.

DATE PREPARED	9/29/2016
ROUTE	I-55
STATE	MO
DISTRICT	SL
SHEET NO.	70
COUNTY	JEFFERSON
JOB NO.	J6I3131
CONTRACT ID.	
PROJECT NO.	
BRIDGE NO.	

DESCRIPTION | DATE

MISSOURI HIGHWAYS AND TRANSPORTATION COMMISSION
105 WEST CAPITOL
JEFFERSON CITY, MO 65102
1-888-ASK-MODOT (1-888-275-6636)

IF A SEAL IS PRESENT ON THIS SHEET IT HAS BEEN ELECTRONICALLY SEALED AND DATED.

TRAFFIC CONTROL
STAGE 5A NB

SHEET 65 OF 76

TRAFFIC CONTROL LEGEND

- SIGN (SINGLE SIDED)
- CHANNELIZER (TRIM-LINE)
- DIRECTION INDICATOR BARRICADE
- TEMPORARY TRAFFIC BARRIER
- CHANGEABLE MESSAGE SIGN
- IMPACT ATTENUATOR
- TYPE III MOVABLE BARRICADE
- FLASHING ARROW PANEL

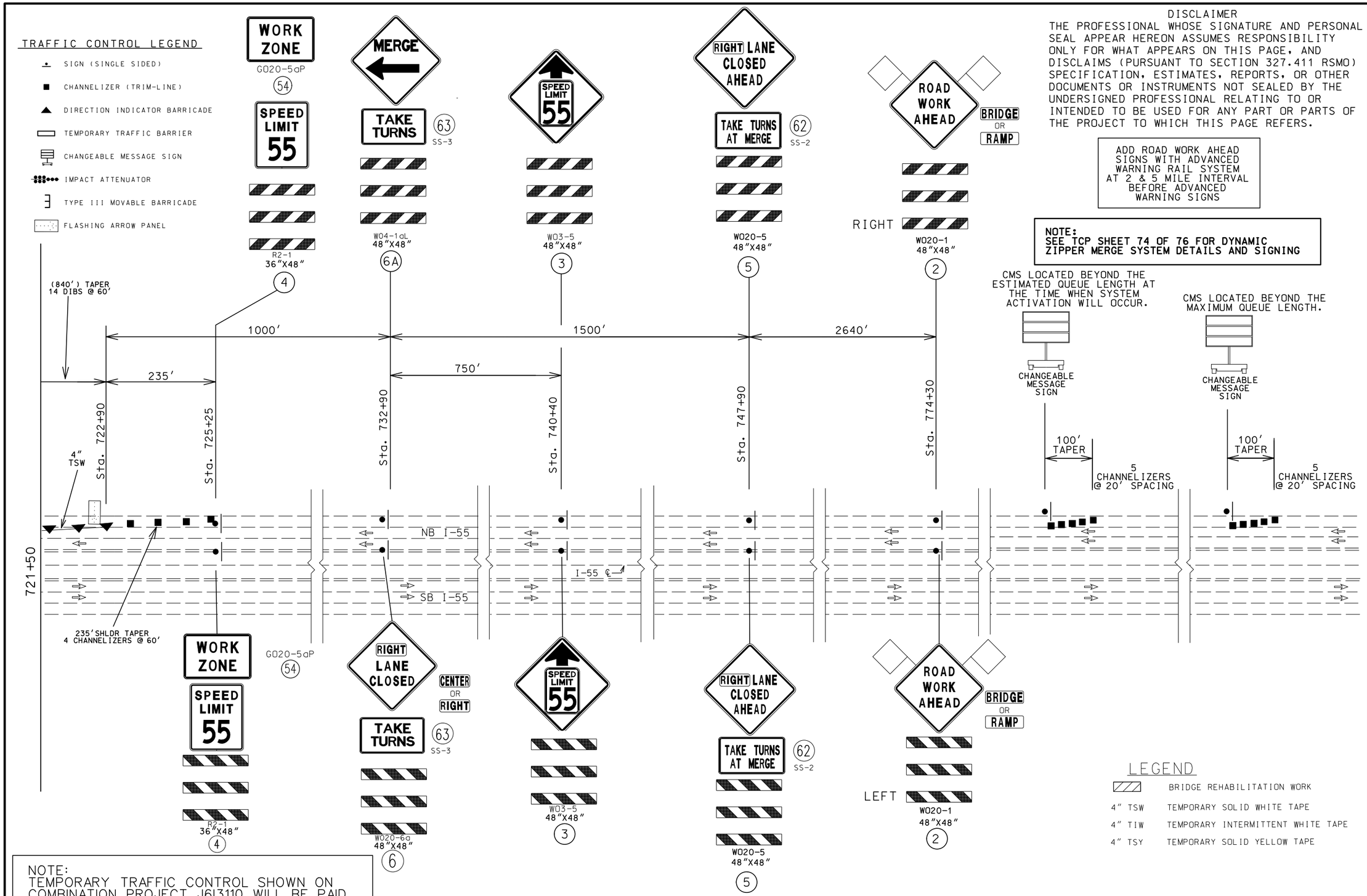

DISCLAIMER

THE PROFESSIONAL WHOSE SIGNATURE AND PERSONAL SEAL APPEAR HEREON ASSUMES RESPONSIBILITY ONLY FOR WHAT APPEARS ON THIS PAGE, AND DISCLAIMS (PURSUANT TO SECTION 327.411 RSMO) SPECIFICATION, ESTIMATES, REPORTS, OR OTHER DOCUMENTS OR INSTRUMENTS NOT SEALED BY THE UNDERSIGNED PROFESSIONAL RELATING TO OR INTENDED TO BE USED FOR ANY PART OR PARTS OF THE PROJECT TO WHICH THIS PAGE REFERS.

ADD ROAD WORK AHEAD SIGNS WITH ADVANCED WARNING RAIL SYSTEM AT 2 & 5 MILE INTERVAL BEFORE ADVANCED WARNING SIGNS

NOTE:
SEE TCP SHEET 74 OF 76 FOR DYNAMIC ZIPPER MERGE SYSTEM DETAILS AND SIGNING

NOTE:
TEMPORARY TRAFFIC CONTROL SHOWN ON COMBINATION PROJECT J6I3110 WILL BE PAID FOR ON THIS PROJECT. J6I3110 TEMPORARY TRAFFIC CONTROL IS FOR INFORMATIONAL USE ONLY.

NOTE:
SHOWN TEMP.TRAFFIC CONTROL SIGNS AND DEVICES TO BE RELOCATED FROM PRIOR STAGE AT NO DIRECT PAY

LEGEND

	BRIDGE REHABILITATION WORK
4" TSW	TEMPORARY SOLID WHITE TAPE
4" TIW	TEMPORARY INTERMITTENT WHITE TAPE
4" TSY	TEMPORARY SOLID YELLOW TAPE

NOT TO SCALE

STATE OF MISSOURI
SHIRLEY J. NORRIS
NUMBER PE-28779
PROFESSIONAL ENGINEER
THIS SHEET HAS BEEN SIGNED, SEALED AND DATED ELECTRONICALLY.

DATE PREPARED	9/29/2016
ROUTE	I-55
STATE	MO
DISTRICT	SL
SHEET NO.	71
COUNTY	JEFFERSON
JOB NO.	J6I3131
CONTRACT ID.	
PROJECT NO.	
BRIDGE NO.	

DESCRIPTION

DATE

IF A SEAL IS PRESENT ON THIS SHEET IT HAS BEEN ELECTRONICALLY SEALED AND DATED.

MISSOURI HIGHWAYS AND TRANSPORTATION COMMISSION
105 WEST CAPITOL
JEFFERSON CITY, MO 65102
1-888-ASK-MODOT (1-888-275-6636)

TRAFFIC CONTROL
STAGE 5B NB

SHEET 66 OF 76

TRAFFIC CONTROL LEGEND

- SIGN (SINGLE SIDED)
- CHANNELIZER (TRIM-LINE)
- DIRECTION INDICATOR BARRICADE
- TEMPORARY TRAFFIC BARRIER
- CHANGEABLE MESSAGE SIGN
- IMPACT ATTENUATOR
- TYPE III MOVABLE BARRICADE

LEGEND

4" TSW	TEMPORARY SOLID WHITE TAPE
4" TIW	TEMPORARY INTERMITTENT WHITE TAPE
4" TSY	TEMPORARY SOLID YELLOW TAPE

SHOWN TEMP. TRAFFIC CONTROL SIGNS AND DEVICES TO BE RELOCATED FROM PRIOR STAGE AT NO DIRECT PAY

DISCLAIMER

THE PROFESSIONAL WHOSE SIGNATURE AND PERSONAL SEAL APPEAR HEREON ASSUMES RESPONSIBILITY ONLY FOR WHAT APPEARS ON THIS PAGE, AND DISCLAIMS (PURSUANT TO SECTION 327.411 RSMO) SPECIFICATION, ESTIMATES, REPORTS, OR OTHER DOCUMENTS OR INSTRUMENTS NOT SEALED BY THE UNDERSIGNED PROFESSIONAL RELATING TO OR INTENDED TO BE USED FOR ANY PART OR PARTS OF THE PROJECT TO WHICH THIS PAGE REFERS.

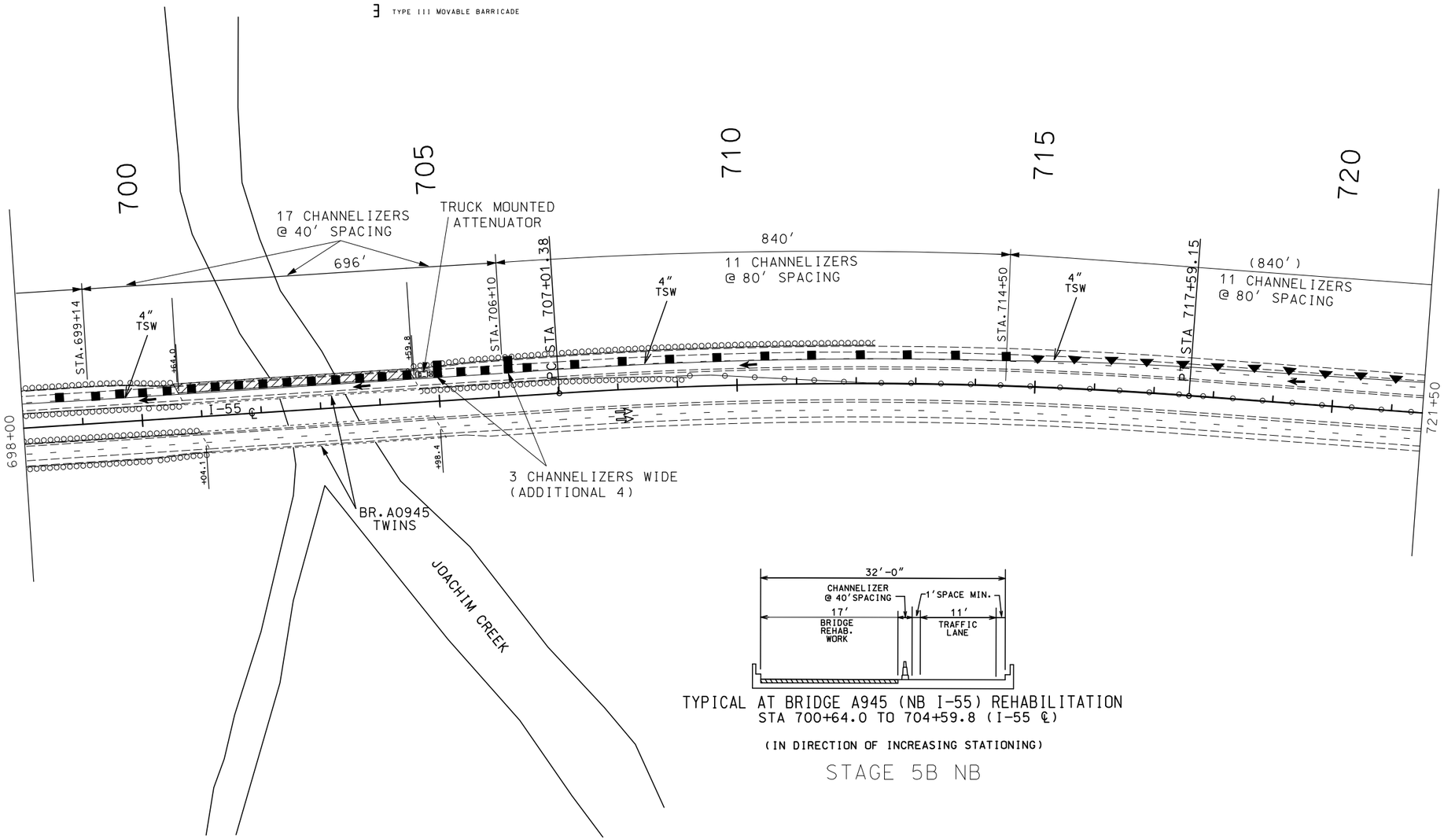

TYPICAL AT BRIDGE A945 (NB I-55) REHABILITATION
STA 700+64.0 TO 704+59.8 (I-55 ℄)

(IN DIRECTION OF INCREASING STATIONING)

STAGE 5B NB

NOTE:
TEMPORARY TRAFFIC CONTROL SHOWN ON COMBINATION PROJECT J6I3110 WILL BE PAID FOR ON THIS PROJECT. J6I3110 TEMPORARY TRAFFIC CONTROL IS FOR INFORMATIONAL USE ONLY.

BRIDGE REHABILITATION WORK

SCALE

0 100 200 300 400 500

STATE OF MISSOURI
SHIRLEY J. NORRIS
NUMBER PE-28779
PROFESSIONAL ENGINEER

THIS SHEET HAS BEEN SIGNED, SEALED AND DATED ELECTRONICALLY.

DATE PREPARED	9/29/2016
ROUTE	I-55
STATE	MO
DISTRICT	SL
SHEET NO.	72
COUNTY	JEFFERSON
JOB NO.	J6I3131
CONTRACT ID.	
PROJECT NO.	
BRIDGE NO.	

DESCRIPTION

DATE

IF A SEAL IS PRESENT ON THIS SHEET IT HAS BEEN ELECTRONICALLY SEALED AND DATED.

MISSOURI HIGHWAYS AND TRANSPORTATION COMMISSION

105 WEST CAPITOL
JEFFERSON CITY, MO 65102
1-888-ASK-MODOT (1-888-275-6636)

TRAFFIC CONTROL

STAGE 5B NB

SHEET 67 OF 76

TRAFFIC CONTROL LEGEND

- SIGN (SINGLE SIDED)
- CHANNELIZER (TRIM-LINE)
- DIRECTION INDICATOR BARRICADE
- TEMPORARY TRAFFIC BARRIER
- CHANGEABLE MESSAGE SIGN
- IMPACT ATTENUATOR
- TYPE III MOVABLE BARRICADE

LEGEND

4" TSW	TEMPORARY SOLID WHITE TAPE
4" TIW	TEMPORARY INTERMITTENT WHITE TAPE
4" TSY	TEMPORARY SOLID YELLOW TAPE

SHOWN TEMP. TRAFFIC CONTROL SIGNS AND DEVICES TO BE RELOCATED FROM PRIOR STAGE AT NO DIRECT PAY

DISCLAIMER
THE PROFESSIONAL WHOSE SIGNATURE AND PERSONAL SEAL APPEAR HEREON ASSUMES RESPONSIBILITY ONLY FOR WHAT APPEARS ON THIS PAGE, AND DISCLAIMS (PURSUANT TO SECTION 327.411 RSMO) SPECIFICATION, ESTIMATES, REPORTS, OR OTHER DOCUMENTS OR INSTRUMENTS NOT SEALED BY THE UNDERSIGNED PROFESSIONAL RELATING TO OR INTENDED TO BE USED FOR ANY PART OR PARTS OF THE PROJECT TO WHICH THIS PAGE REFERS.

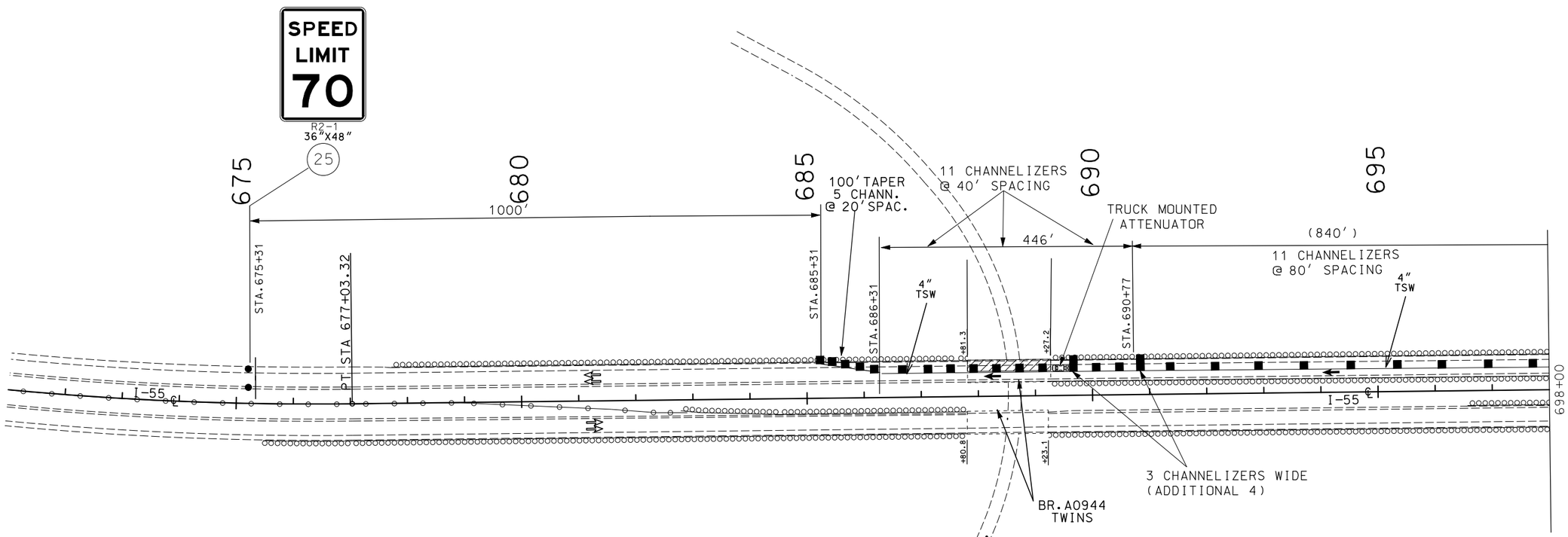

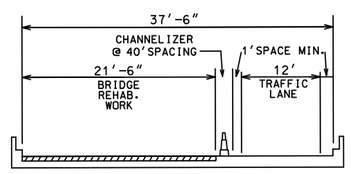

TYPICAL AT BRIDGE A944 (NB I-55) REHABILITATION
STA 687+81.3 TO 689+27.2 (I-55 ℄)

(IN DIRECTION OF INCREASING STATIONING)

STAGE 5B NB

NOTE:
TEMPORARY TRAFFIC CONTROL SHOWN ON COMBINATION PROJECT J6I3110 WILL BE PAID FOR ON THIS PROJECT. J6I3110 TEMPORARY TRAFFIC CONTROL IS FOR INFORMATIONAL USE ONLY.

BRIDGE REHABILITATION WORK

SCALE
0 100 200 300 400 500

STATE OF MISSOURI
SHIRLEY J. NORRIS
NUMBER PE-28779
PROFESSIONAL ENGINEER
THIS SHEET HAS BEEN SIGNED, SEALED AND DATED ELECTRONICALLY.

DATE PREPARED	9/29/2016
ROUTE	I-55
STATE	MO
DISTRICT	SL
SHEET NO.	73
COUNTY	JEFFERSON
JOB NO.	J6I3131
CONTRACT ID.	
PROJECT NO.	
BRIDGE NO.	

DESCRIPTION | DATE

MISSOURI HIGHWAYS AND TRANSPORTATION COMMISSION
105 WEST CAPITOL
JEFFERSON CITY, MO 65102
1-888-ASK-MODOT (1-888-275-6636)

IF A SEAL IS PRESENT ON THIS SHEET IT HAS BEEN ELECTRONICALLY SEALED AND DATED.

TRAFFIC CONTROL

STAGE 5B NB

SHEET 68 OF 76

TRAFFIC CONTROL LEGEND

- SIGN (SINGLE SIDED)
- CHANNELIZER (TRIM-LINE)
- DIRECTION INDICATOR BARRICADE
- TEMPORARY TRAFFIC BARRIER
- CHANGEABLE MESSAGE SIGN
- IMPACT ATTENUATOR
- TYPE III MOVABLE BARRICADE
- FLASHING ARROW PANEL

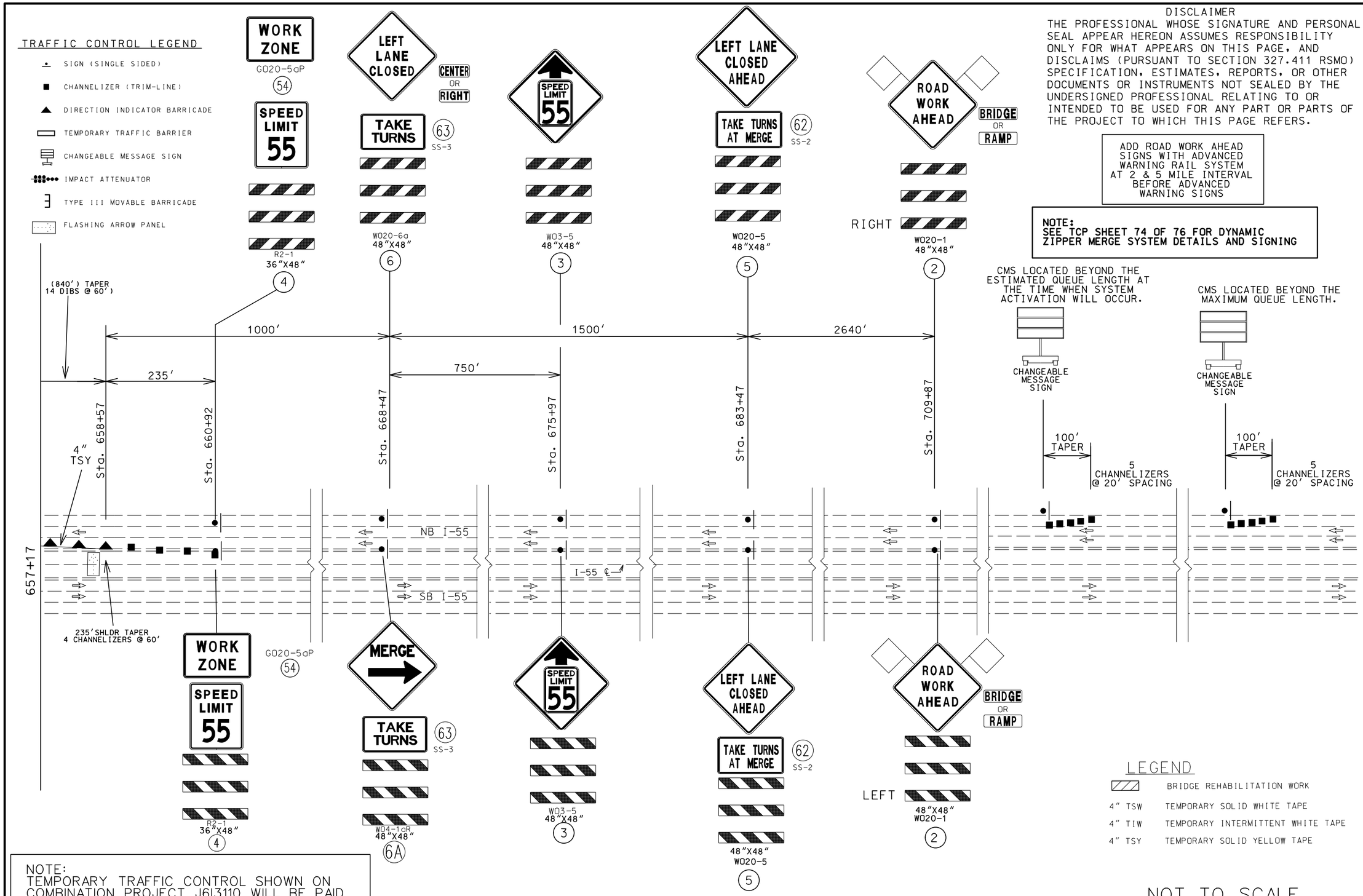

DISCLAIMER

THE PROFESSIONAL WHOSE SIGNATURE AND PERSONAL SEAL APPEAR HEREON ASSUMES RESPONSIBILITY ONLY FOR WHAT APPEARS ON THIS PAGE, AND DISCLAIMS (PURSUANT TO SECTION 327.411 RSMO) SPECIFICATION, ESTIMATES, REPORTS, OR OTHER DOCUMENTS OR INSTRUMENTS NOT SEALED BY THE UNDERSIGNED PROFESSIONAL RELATING TO OR INTENDED TO BE USED FOR ANY PART OR PARTS OF THE PROJECT TO WHICH THIS PAGE REFERS.

ADD ROAD WORK AHEAD SIGNS WITH ADVANCED WARNING RAIL SYSTEM AT 2 & 5 MILE INTERVAL BEFORE ADVANCED WARNING SIGNS

NOTE:
SEE TCP SHEET 74 OF 76 FOR DYNAMIC ZIPPER MERGE SYSTEM DETAILS AND SIGNING

LEGEND

	BRIDGE REHABILITATION WORK
4" TSW	TEMPORARY SOLID WHITE TAPE
4" TIW	TEMPORARY INTERMITTENT WHITE TAPE
4" TSY	TEMPORARY SOLID YELLOW TAPE

NOT TO SCALE

NOTE:
TEMPORARY TRAFFIC CONTROL SHOWN ON COMBINATION PROJECT J6I3110 WILL BE PAID FOR ON THIS PROJECT. J6I3110 TEMPORARY TRAFFIC CONTROL IS FOR INFORMATIONAL USE ONLY.

NOTE:
SHOWN TEMP. TRAFFIC CONTROL SIGNS AND DEVICES TO BE RELOCATED FROM PRIOR STAGE AT NO DIRECT PAY

STATE OF MISSOURI
SHIRLEY J. NORRIS
NUMBER PE-28779
PROFESSIONAL ENGINEER
THIS SHEET HAS BEEN SIGNED, SEALED AND DATED ELECTRONICALLY.

DATE PREPARED	9/29/2016
ROUTE	I-55
STATE	MO
DISTRICT	SL
SHEET NO.	74
COUNTY	JEFFERSON
JOB NO.	J6I3131
CONTRACT ID.	
PROJECT NO.	
BRIDGE NO.	

DESCRIPTION

DATE

IF A SEAL IS PRESENT ON THIS SHEET IT HAS BEEN ELECTRONICALLY SEALED AND DATED.

MISSOURI HIGHWAYS AND TRANSPORTATION COMMISSION
105 WEST CAPITOL
JEFFERSON CITY, MO 65102
1-888-ASK-MODOT (1-888-275-6636)

TRAFFIC CONTROL

STAGE 6A NB

SHEET 69 OF 76

TRAFFIC CONTROL LEGEND

- SIGN (SINGLE SIDED)
- CHANNELIZER (TRIM-LINE)
- DIRECTION INDICATOR BARRICADE
- TEMPORARY TRAFFIC BARRIER
- CHANGEABLE MESSAGE SIGN
- IMPACT ATTENUATOR
- TYPE III MOVABLE BARRICADE

LEGEND

4" TSW	TEMPORARY SOLID WHITE TAPE
4" TIW	TEMPORARY INTERMITTENT WHITE TAPE
4" TSY	TEMPORARY SOLID YELLOW TAPE

DISCLAIMER
THE PROFESSIONAL WHOSE SIGNATURE AND PERSONAL SEAL APPEAR HEREON ASSUMES RESPONSIBILITY ONLY FOR WHAT APPEARS ON THIS PAGE, AND DISCLAIMS (PURSUANT TO SECTION 327.411 RSMO) SPECIFICATION, ESTIMATES, REPORTS, OR OTHER DOCUMENTS OR INSTRUMENTS NOT SEALED BY THE UNDERSIGNED PROFESSIONAL RELATING TO OR INTENDED TO BE USED FOR ANY PART OR PARTS OF THE PROJECT TO WHICH THIS PAGE REFERS.

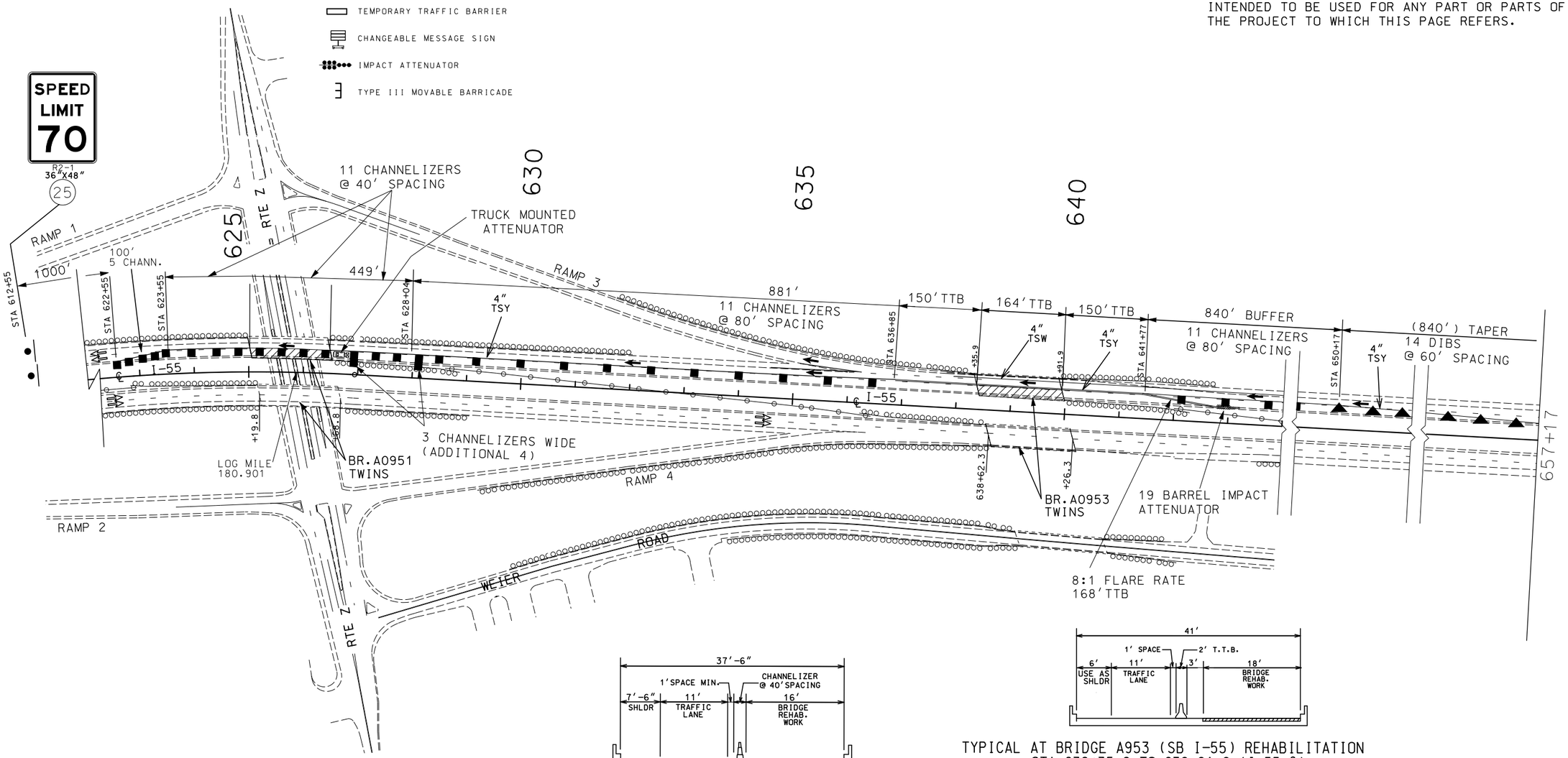

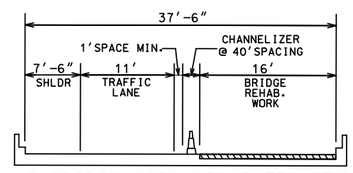

TYPICAL AT BRIDGE A951 (SB I-55) REHABILITATION
STA 625+04.5 TO 626+53.5 (I-55 ℄)

(IN DIRECTION OF INCREASING STATIONING)

STAGE 6A NB

TYPICAL AT BRIDGE A953 (SB I-55) REHABILITATION
STA 638+35.9 TO 639+91.9 (I-55 ℄)

(IN DIRECTION OF INCREASING STATIONING)

STAGE 6A NB

BRIDGE REHABILITATION WORK

NOTE:
TEMPORARY TRAFFIC CONTROL SHOWN ON COMBINATION PROJECT J6I3110 WILL BE PAID FOR ON THIS PROJECT. J6I3110 TEMPORARY TRAFFIC CONTROL IS FOR INFORMATIONAL USE ONLY.

SCALE
0 100 200 300 400 500

STATE OF MISSOURI
SHIRLEY J. NORRIS
NUMBER PE-28779
PROFESSIONAL ENGINEER
THIS SHEET HAS BEEN SIGNED, SEALED AND DATED ELECTRONICALLY.

DATE PREPARED	9/29/2016
ROUTE	I-55
STATE	MO
DISTRICT	SL
SHEET NO.	75
COUNTY	JEFFERSON
JOB NO.	J6I3131
CONTRACT ID.	
PROJECT NO.	
BRIDGE NO.	

DESCRIPTION
DATE

IF A SEAL IS PRESENT ON THIS SHEET IT HAS BEEN ELECTRONICALLY SEALED AND DATED.

MISSOURI HIGHWAYS AND TRANSPORTATION COMMISSION
105 WEST CAPITOL
JEFFERSON CITY, MO 65102
1-888-ASK-MODOT (1-888-275-6636)

TRAFFIC CONTROL
STAGE 6A NB

SHEET 70 OF 76

TRAFFIC CONTROL LEGEND

- SIGN (SINGLE SIDED)
- CHANNELIZER (TRIM-LINE)
- DIRECTION INDICATOR BARRICADE
- TEMPORARY TRAFFIC BARRIER
- CHANGEABLE MESSAGE SIGN
- IMPACT ATTENUATOR
- TYPE III MOVABLE BARRICADE
- FLASHING ARROW PANEL

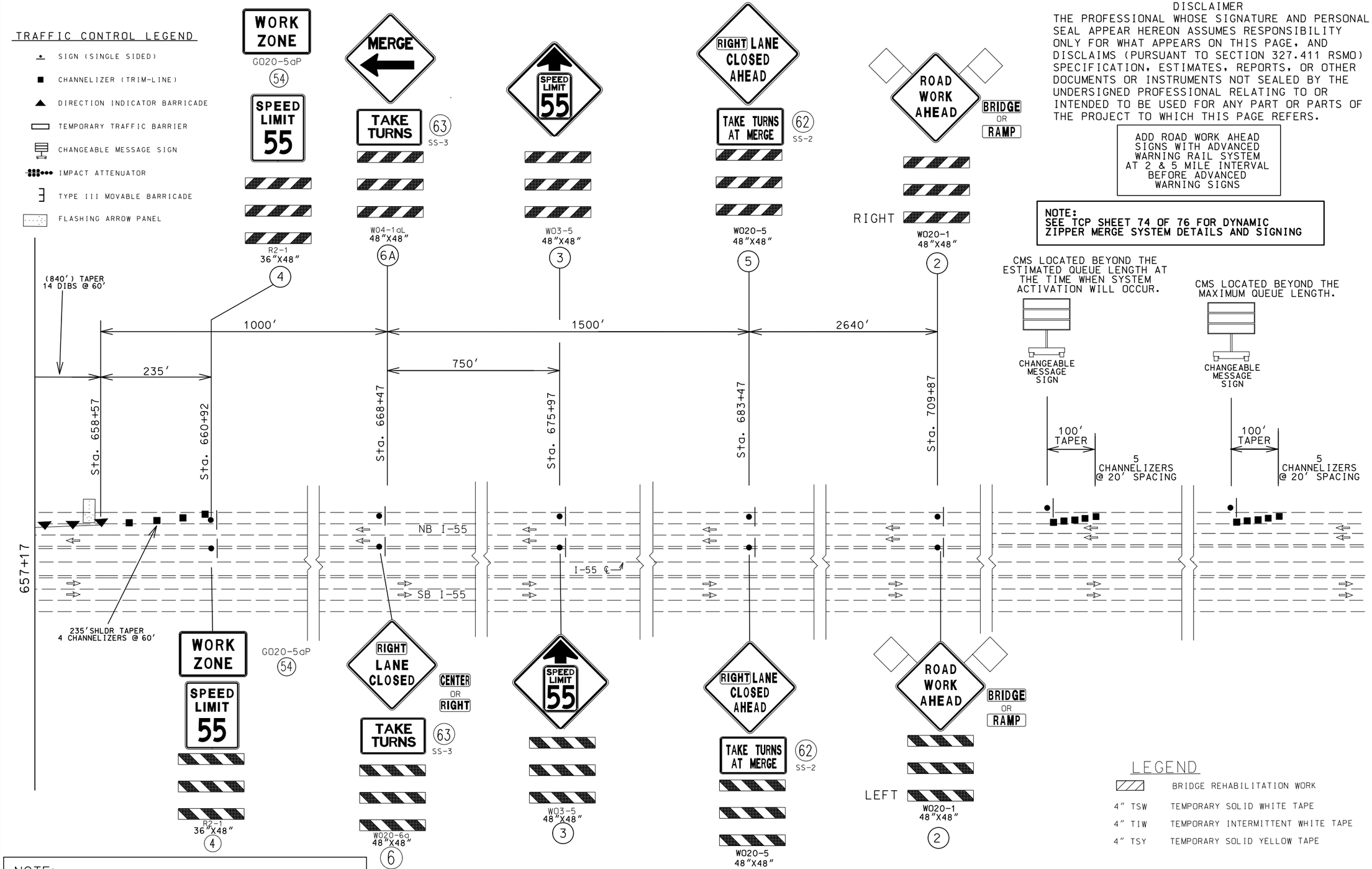

DISCLAIMER

THE PROFESSIONAL WHOSE SIGNATURE AND PERSONAL SEAL APPEAR HEREON ASSUMES RESPONSIBILITY ONLY FOR WHAT APPEARS ON THIS PAGE, AND DISCLAIMS (PURSUANT TO SECTION 327.411 RSMO) SPECIFICATION, ESTIMATES, REPORTS, OR OTHER DOCUMENTS OR INSTRUMENTS NOT SEALED BY THE UNDERSIGNED PROFESSIONAL RELATING TO OR INTENDED TO BE USED FOR ANY PART OR PARTS OF THE PROJECT TO WHICH THIS PAGE REFERS.

ADD ROAD WORK AHEAD SIGNS WITH ADVANCED WARNING RAIL SYSTEM AT 2 & 5 MILE INTERVAL BEFORE ADVANCED WARNING SIGNS

NOTE:
SEE TCP SHEET 74 OF 76 FOR DYNAMIC ZIPPER MERGE SYSTEM DETAILS AND SIGNING

LEGEND

	BRIDGE REHABILITATION WORK
4" TSW	TEMPORARY SOLID WHITE TAPE
4" TIW	TEMPORARY INTERMITTENT WHITE TAPE
4" TSY	TEMPORARY SOLID YELLOW TAPE

NOTE:
TEMPORARY TRAFFIC CONTROL SHOWN ON COMBINATION PROJECT J6I3110 WILL BE PAID FOR ON THIS PROJECT. J6I3110 TEMPORARY TRAFFIC CONTROL IS FOR INFORMATIONAL USE ONLY.

NOTE:
SHOWN TEMP. TRAFFIC CONTROL SIGNS AND DEVICES TO BE RELOCATED FROM PRIOR STAGE AT NO DIRECT PAY

NOT TO SCALE

STATE OF MISSOURI
SHIRLEY J. NORRIS
NUMBER PE-28779
PROFESSIONAL ENGINEER
THIS SHEET HAS BEEN SIGNED, SEALED AND DATED ELECTRONICALLY.

IF A SEAL IS PRESENT ON THIS SHEET IT HAS BEEN ELECTRONICALLY SEALED AND DATED.

DATE PREPARED	9/29/2016
ROUTE	I-55
STATE	MO
DISTRICT	SL
SHEET NO.	76
COUNTY	JEFFERSON
JOB NO.	J6I3131
CONTRACT ID.	
PROJECT NO.	
BRIDGE NO.	

DESCRIPTION

DATE

MISSOURI HIGHWAYS AND TRANSPORTATION COMMISSION
105 WEST CAPITOL
JEFFERSON CITY, MO 65102
1-888-ASK-MODOT (1-888-275-6636)

TRAFFIC CONTROL
STAGE 6B NB

SHEET 71 OF 76

TRAFFIC CONTROL LEGEND

- SIGN (SINGLE SIDED)
- CHANNELIZER (TRIM-LINE)
- DIRECTION INDICATOR BARRICADE
- TEMPORARY TRAFFIC BARRIER
- CHANGEABLE MESSAGE SIGN
- IMPACT ATTENUATOR
- TYPE III MOVABLE BARRICADE

LEGEND

4" TSW	TEMPORARY SOLID WHITE TAPE
4" TIW	TEMPORARY INTERMITTENT WHITE TAPE
4" TSY	TEMPORARY SOLID YELLOW TAPE

DISCLAIMER
THE PROFESSIONAL WHOSE SIGNATURE AND PERSONAL SEAL APPEAR HEREON ASSUMES RESPONSIBILITY ONLY FOR WHAT APPEARS ON THIS PAGE, AND DISCLAIMS (PURSUANT TO SECTION 327.411 RSMO) SPECIFICATION, ESTIMATES, REPORTS, OR OTHER DOCUMENTS OR INSTRUMENTS NOT SEALED BY THE UNDERSIGNED PROFESSIONAL RELATING TO OR INTENDED TO BE USED FOR ANY PART OR PARTS OF THE PROJECT TO WHICH THIS PAGE REFERS.

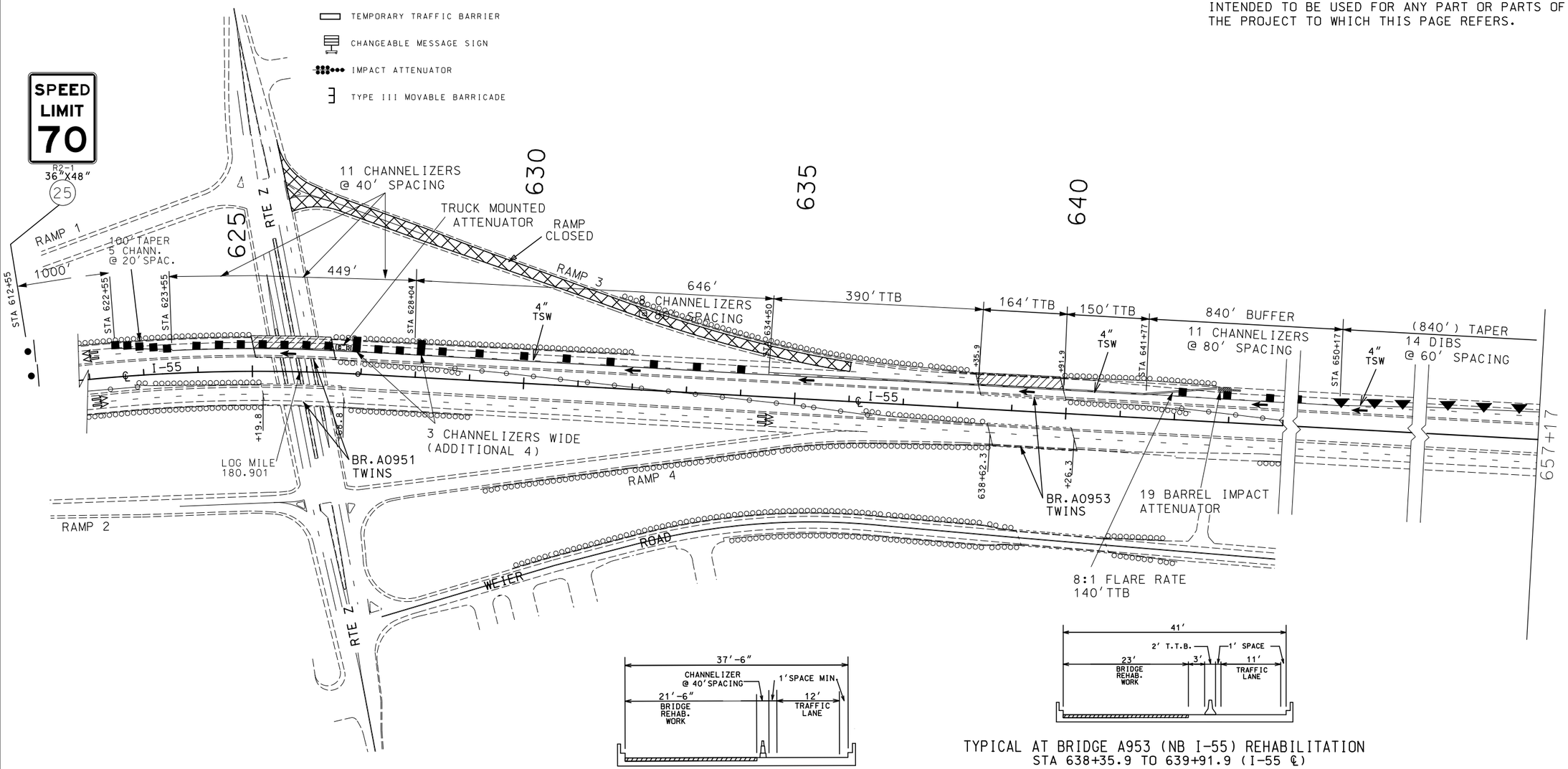

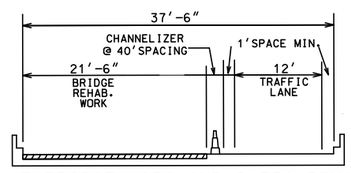

TYPICAL AT BRIDGE A951 (NB I-55) REHABILITATION
STA 625+04.5 TO 626+53.5 (I-55 ℄)

(IN DIRECTION OF INCREASING STATIONING)

STAGE 6B NB

TYPICAL AT BRIDGE A953 (NB I-55) REHABILITATION
STA 638+35.9 TO 639+91.9 (I-55 ℄)

(IN DIRECTION OF INCREASING STATIONING)

STAGE 6B NB

NOTE:
TEMPORARY TRAFFIC CONTROL SHOWN ON COMBINATION PROJECT J6I3110 WILL BE PAID FOR ON THIS PROJECT. J6I3110 TEMPORARY TRAFFIC CONTROL IS FOR INFORMATIONAL USE ONLY.

SHOWN TEMP. TRAFFIC CONTROL SIGNS AND DEVICES TO BE RELOCATED FROM PRIOR STAGE AT NO DIRECT PAY

BRIDGE REHABILITATION WORK

SCALE
0 100 200 300 400 500

STATE OF MISSOURI
SHIRLEY J. NORRIS
NUMBER PE-28779
PROFESSIONAL ENGINEER
THIS SHEET HAS BEEN SIGNED, SEALED AND DATED ELECTRONICALLY.

DATE PREPARED	9/29/2016
ROUTE	I-55
STATE	MO
DISTRICT	SL
SHEET NO.	77
COUNTY	JEFFERSON
JOB NO.	J6I3131
CONTRACT ID.	
PROJECT NO.	
BRIDGE NO.	

DATE | DESCRIPTION

IF A SEAL IS PRESENT ON THIS SHEET IT HAS BEEN ELECTRONICALLY SEALED AND DATED.

MISSOURI HIGHWAYS AND TRANSPORTATION COMMISSION
105 WEST CAPITOL
JEFFERSON CITY, MO 65102
1-888-ASK-MODOT (1-888-275-6636)

TRAFFIC CONTROL
STAGE 6B NB

SHEET 72 OF 76

DETOUR FOR NORTHBOUND I-55 @ ROUTE Z EXIT-RAMP CLOSURE DURING STAGE 6B CONSTRUCTION

DISCLAIMER
THE PROFESSIONAL WHOSE SIGNATURE AND PERSONAL SEAL APPEAR HEREON ASSUMES RESPONSIBILITY ONLY FOR WHAT APPEARS ON THIS PAGE, AND DISCLAIMS (PURSUANT TO SECTION 327.411 RSMO) SPECIFICATION, ESTIMATES, REPORTS, OR OTHER DOCUMENTS OR INSTRUMENTS NOT SEALED BY THE UNDERSIGNED PROFESSIONAL RELATING TO OR INTENDED TO BE USED FOR ANY PART OR PARTS OF THE PROJECT TO WHICH THIS PAGE REFERS.

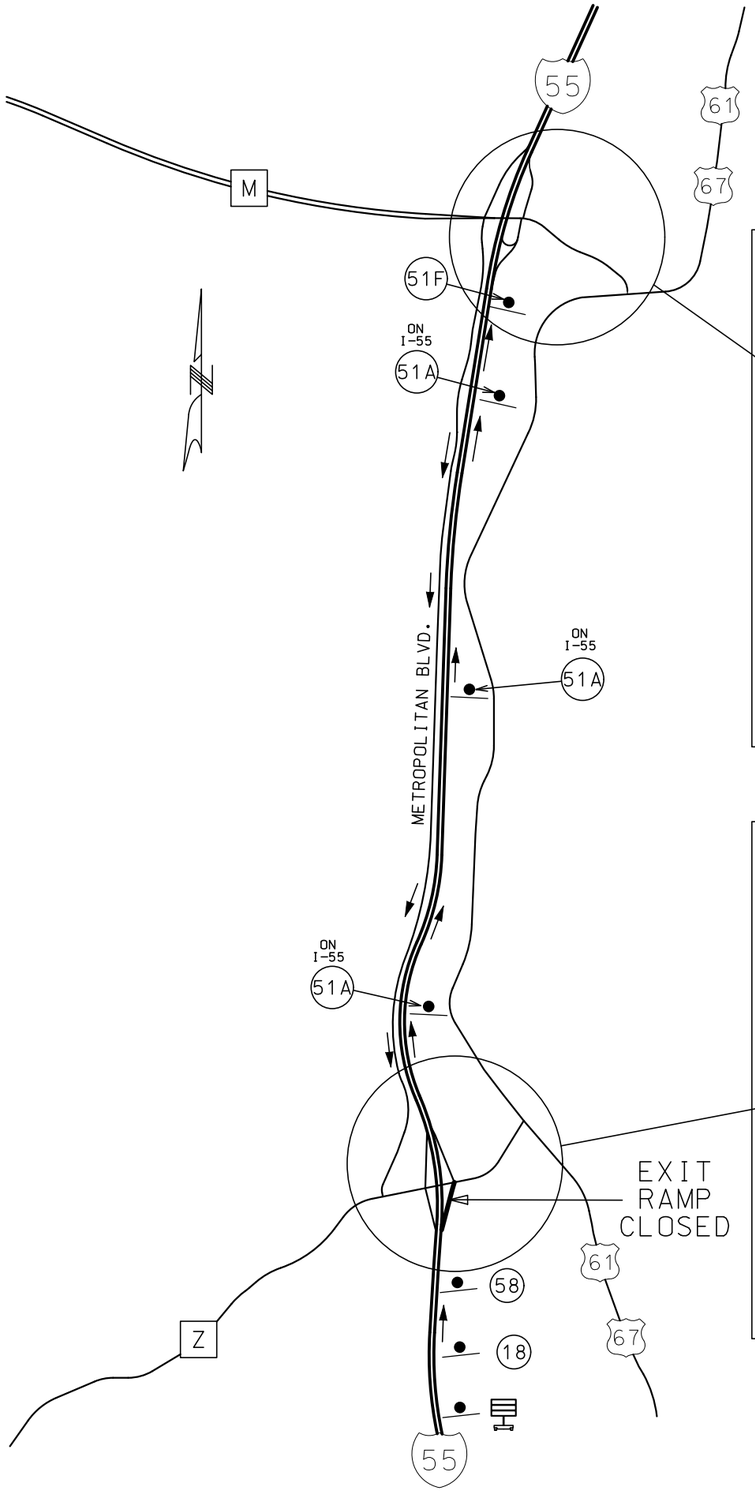

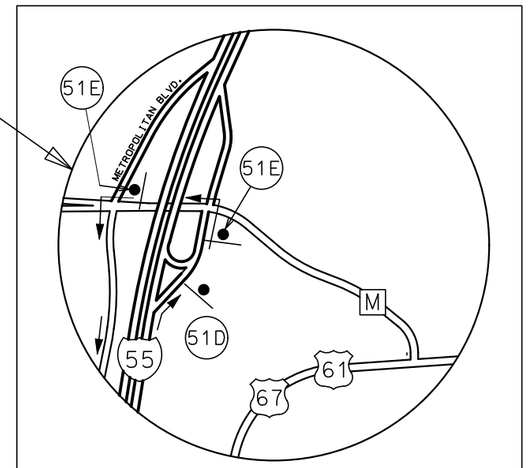

DETAIL OF ROAD CLOSURE

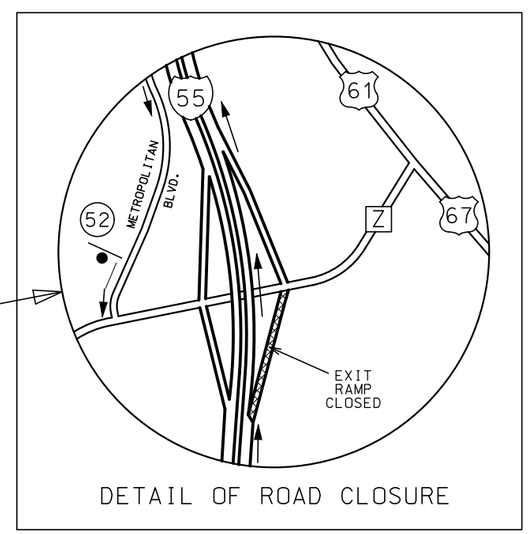

DETAIL OF ROAD CLOSURE

GENERAL NOTES:

1. ANY EXISTING SIGNS THAT CONFLICT WITH THE TRAFFIC CONTROL PLAN SHALL BE COMPLETELY COVERED OR REMOVED.
2. ALL SIGNS SHALL BE GROUND-MOUNTED.
3. ALL DISTANCES AND SPACING OF TRAFFIC CONTROL DEVICES ARE APPROXIMATE AND MAY BE REVISED AS DIRECTED BY THE ENGINEER TO FIT FIELD CONDITIONS.

TRAFFIC CONTROL LEGEND

SIGN (SINGLE SIDED)

CHANGEABLE MESSAGE SIGN (WITH 5 CHANNELIZERS)

W020-2
48"X48"
18

M04-8a
24"X18"
52

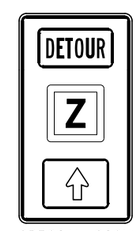

SPECIAL SIGN
36"X60"
51A
(SEE SIGN DETAIL SHEET)

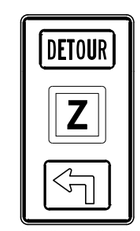

SPECIAL SIGN
36"X60"
51D
(SEE SIGN DETAIL SHEET)

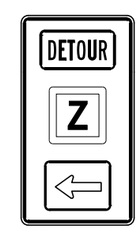

SPECIAL SIGN
36"X60"
51E
(SEE SIGN DETAIL SHEET)

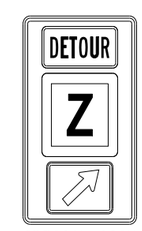

SPECIAL SIGN
36"X60"
51F
(SEE SIGN DETAIL SHEET)

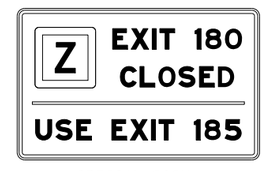

SPECIAL SIGN
96"X60"
58
(SEE SIGN DETAIL SHEET)

NOT TO SCALE

STATE OF MISSOURI
SHIRLEY J. NORRIS
NUMBER PE-28779
PROFESSIONAL ENGINEER
THIS SHEET HAS BEEN SIGNED, SEALED AND DATED ELECTRONICALLY.

DATE PREPARED	9/29/2016
ROUTE	I-55
STATE	MO
DISTRICT	SL
SHEET NO.	78
COUNTY	JEFFERSON
JOB NO.	J6I3131
CONTRACT ID.	
PROJECT NO.	
BRIDGE NO.	

DATE	DESCRIPTION

IF A SEAL IS PRESENT ON THIS SHEET IT HAS BEEN ELECTRONICALLY SEALED AND DATED.

MISSOURI HIGHWAYS AND TRANSPORTATION COMMISSION
105 WEST CAPITOL
JEFFERSON CITY, MO 65102
1-888-ASK-MODOT (1-888-275-6636)

TRAFFIC CONTROL
I-55 DETOUR PLAN
STAGE 6B NB
SHEET 73 OF 76

DYNAMIC ZIPPER MERGE SYSTEM

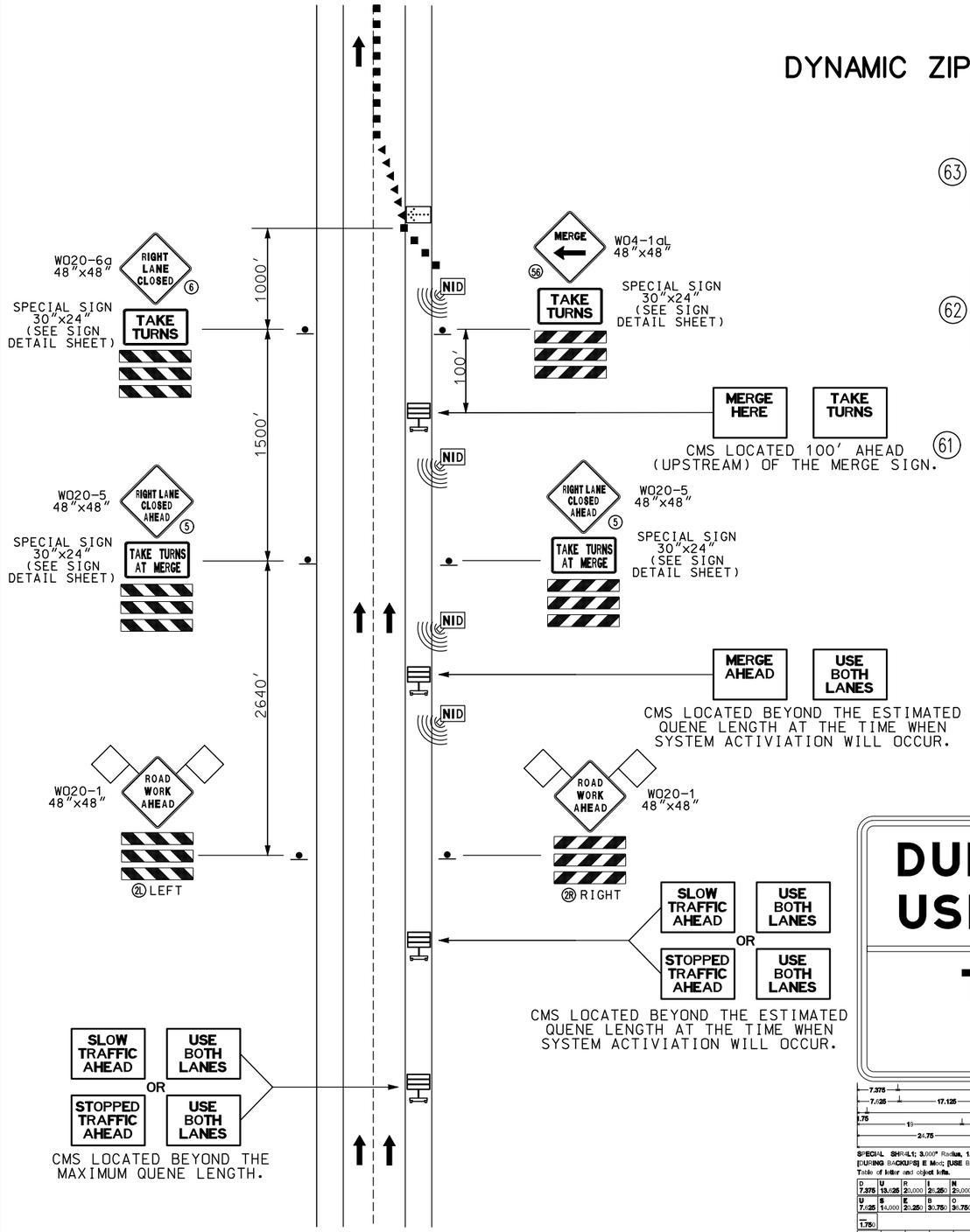

63 **TAKE TURNS** — SPECIAL SIGN 30"x24"

62 **TAKE TURNS AT MERGE** — SPECIAL SIGN 30"x24"

61 **DURING BACKUPS USE BOTH LANES / TAKE TURNS AT MERGE** — SPECIAL SIGN 96"x48"

DISCLAIMER

THE PROFESSIONAL WHOSE SIGNATURE AND PERSONAL SEAL APPEAR HEREON ASSUMES RESPONSIBILITY ONLY FOR WHAT APPEARS ON THIS PAGE, AND DISCLAIMS (PURSUANT TO SECTION 327.411 RSMO) SPECIFICATION, ESTIMATES, REPORTS, OR OTHER DOCUMENTS OR INSTRUMENTS NOT SEALED BY THE UNDERSIGNED PROFESSIONAL RELATING TO OR INTENDED TO BE USED FOR ANY PART OR PARTS OF THE PROJECT TO WHICH THIS PAGE REFERS.

TRAFFIC CONTROL LEGEND

- SIGN (SINGLE SIDED)
- ADVANCED WARNING RAIL SYSTEM
- CHANNELIZER (TRIM LINE)
- DIRECTIONAL INDICATOR BARRICADE
- CHANGEABLE MESSAGE SIGN
- FLASHING ARROW PANEL
- NID NON-INTRUSIVE DETECTOR

NOTES:

THE CHANGEABLE MESSAGE SIGNS AND NON-INTRUSIVE DETECTORS SHALL BE SPACED ALONG THE ROUTE AS NEEDED FOR PROPER SYSTEMS OPERATIONS.

STATIC SIGNS MAY BE USED AS A SUPPLEMENT FOR CMS BOARDS. THE STATIC SIGN PROVIDES A CONTINUOUS REINFORCING MESSAGE TO THE TRAVELING PUBLIC.

STATIC SIGNS MAY BE LOCATED BEYOND AND WITHIN THE ANTICIPATED QUENE LENGTH.

NO DIRECT PAY FOR NON-INTRUSIVE DETECTOR

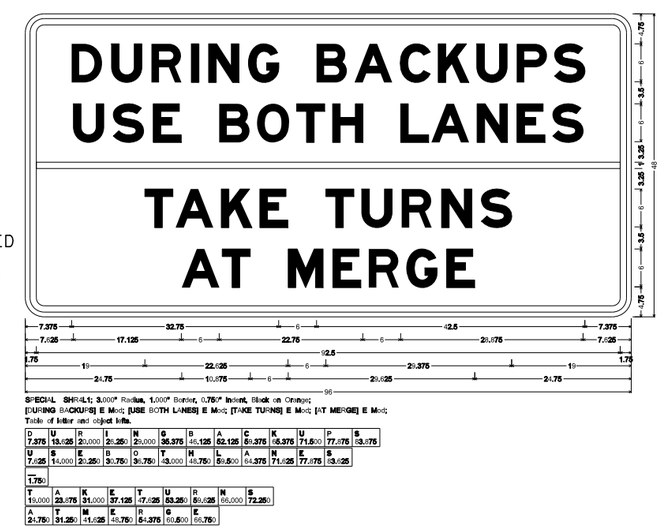

SPECIAL SHR-4L1; 3.000" Radius, 1.000" Border, 0.750" Indent, Black on Orange;
[DURING BACKUPS] E Mod; [USE BOTH LANES] E Mod; [TAKE TURNS] E Mod; [AT MERGE] E Mod;
Table of letter and object info.

D	U	R	I	N	G	B	A	C	K	U	P	S					
7.375	13.625	20.000	21.250	29.000	35.375	45.125	52.125	59.375	65.375	71.500	77.375	83.375					
U	S	E	B	O	T	H	L	A	N	E	S						
7.625	14.000	20.250	30.750	36.750	43.000	48.750	59.500	64.375	71.625	77.375	83.625						
1.750																	
T	A	K	E	T	U	R	N	S									
15.000	23.375	31.000	37.125	47.625	53.250	59.625	66.000	72.250									
A	T	M	E	R	G	E											
24.750	31.250	41.625	48.750	54.375	60.500	66.750											

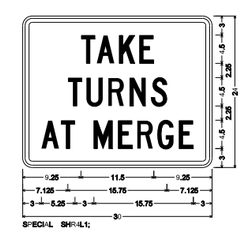

SPECIAL SHR-4L1;
1.500" Radius, 0.625" Border, 0.375" Indent, Black on Orange;
[TAKE] C; [TURNS] C; [AT MERGE] C;
Table of letter and object info.

T	A	K	E														
9.250	11.750	15.250	18.500														
T	U	R	N	S													
7.125	10.125	13.625	17.000	20.375													
A	T	M	E	R	G	E											
3.000	6.000	11.250	15.125	18.125	21.375	24.750											

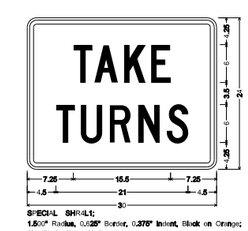

SPECIAL SHR-4L1;
1.500" Radius, 0.625" Border, 0.375" Indent, Black on Orange;
[TAKE] C; [TURNS] C;
Table of letter and object info.

T	A	K	E	
7.250	10.625	15.375	18.750	
T	U	R	N	S
4.500	8.500	13.125	17.625	22.125

NOT TO SCALE

STATE OF MISSOURI
SHIRLEY J. NORRIS
NUMBER PE-28779
PROFESSIONAL ENGINEER

THIS SHEET HAS BEEN SIGNED, SEALED AND DATED ELECTRONICALLY.

DATE PREPARED	
9/29/2016	
ROUTE	STATE
I-55	MO
DISTRICT	SHEET NO.
SL	79
COUNTY	
JEFFERSON	
JOB NO.	
J6I3131	
CONTRACT ID.	
PROJECT NO.	
BRIDGE NO.	

DATE	DESCRIPTION

IF A SEAL IS PRESENT ON THIS SHEET IT HAS BEEN ELECTRONICALLY SEALED AND DATED.

MISSOURI HIGHWAYS AND TRANSPORTATION COMMISSION

105 WEST CAPITOL
JEFFERSON CITY, MO 65102
1-888-ASK-MODOT (1-888-275-6636)

TRAFFIC CONTROL

DYNAMIC ZIPPER MERGE SYSTEM

SHEET 74 OF 76

Lane Closure
Single Lane of Multi-Lane Divided Highway

DISCLAIMER
THE PROFESSIONAL WHOSE SIGNATURE AND PERSONAL SEAL APPEAR HEREON ASSUMES RESPONSIBILITY ONLY FOR WHAT APPEARS ON THIS PAGE, AND DISCLAIMS (PURSUANT TO SECTION 327.411 RSMO) SPECIFICATION, ESTIMATES, REPORTS, OR OTHER DOCUMENTS OR INSTRUMENTS NOT SEALED BY THE UNDERSIGNED PROFESSIONAL RELATING TO OR INTENDED TO BE USED FOR ANY PART OR PARTS OF THE PROJECT TO WHICH THIS PAGE REFERS.

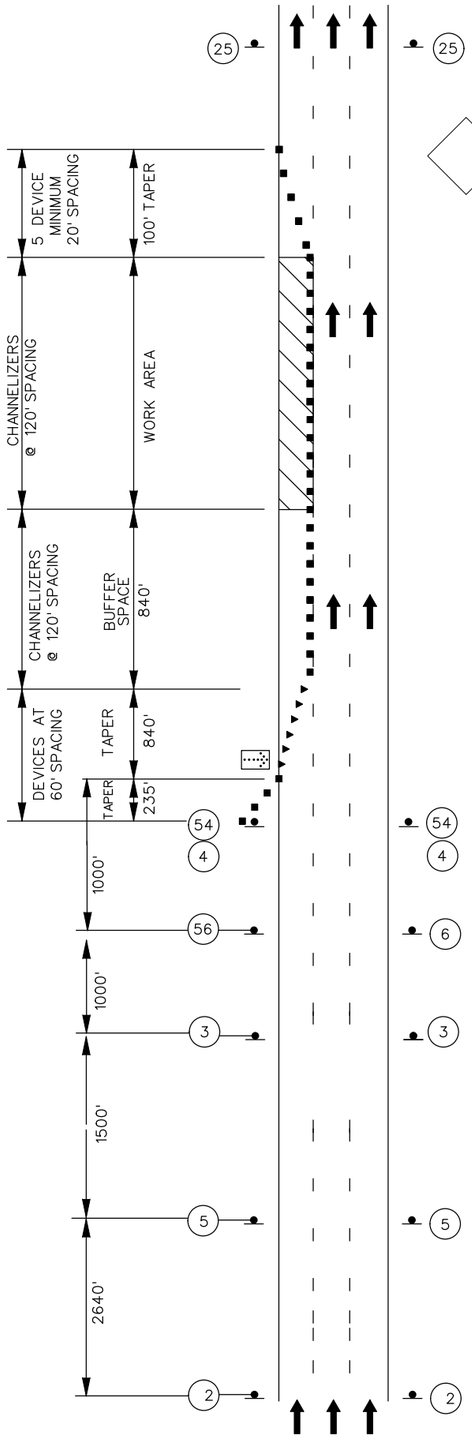

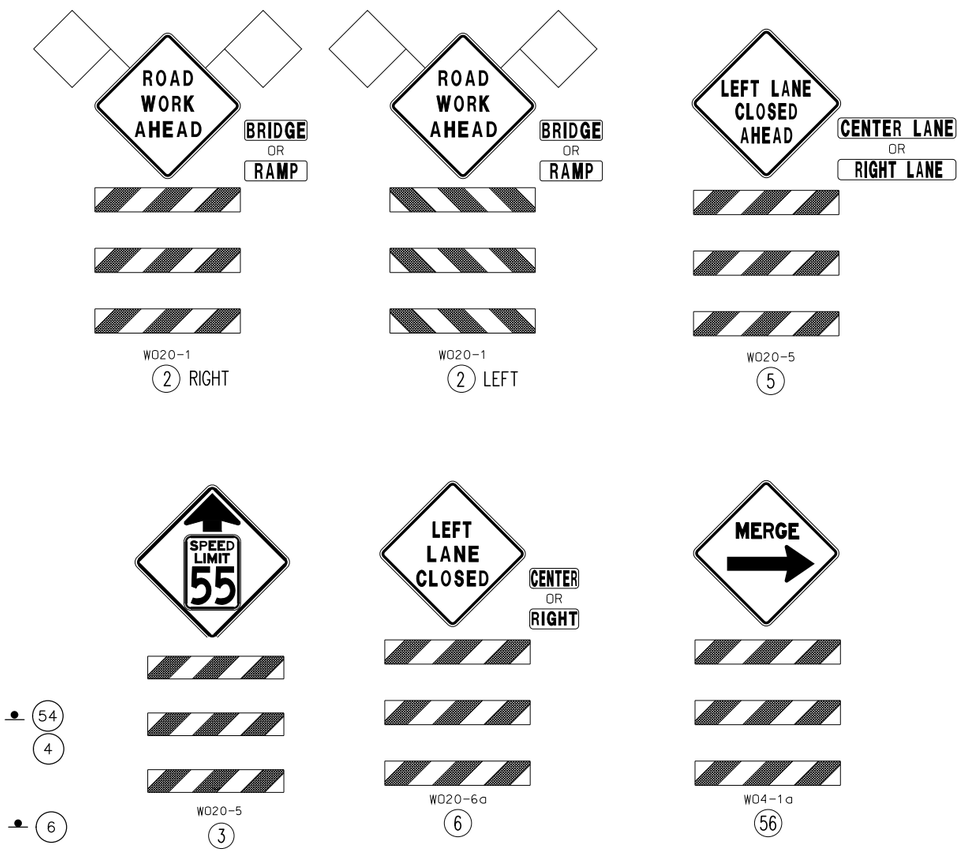

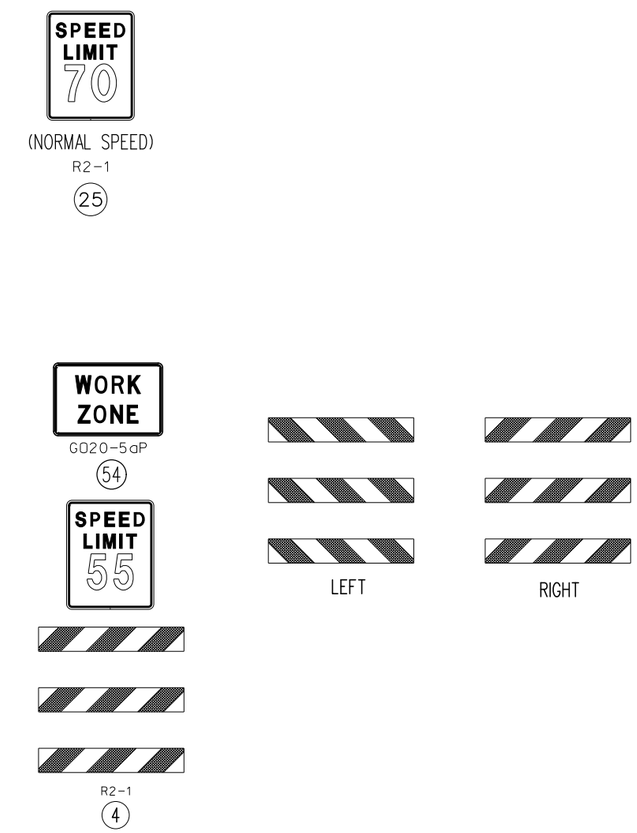

TRAFFIC CONTROL LEGEND

- SIGN (SINGLE SIDED)
- SIGN (DOUBLE SIDED)
- FLAGGER
- CONE
- CHANNELIZER (TRIM LINE)
- BARRICADE
- CHANGEABLE MESSAGE SIGN
- FLASHING ARROW PANEL

NOTES:

SEE BEGIN/END OF PROJECT SIGNING SHEET FOR ADDITIONAL SIGNS.

REMOVE AND/OR MODIFY ANY EXISTING PAVEMENT MARKING AS NEEDED.

TEMPORARY PAVEMENT MARKING REQUIRED WITH LONG TERM LANE CLOSURES.

ANY EXISTING SIGNING THAT CONFLICTS WITH THE TRAFFIC CONTROL SIGNING SHALL BE COMPLETELY COVERED OR REMOVED.

NO DIRECT PAY WILL BE MADE FOR RELOCATION OF TCP SIGNS.

STATE OF MISSOURI
SHIRLEY J. NORRIS
NUMBER PE-28779
PROFESSIONAL ENGINEER
THIS SHEET HAS BEEN SIGNED, SEALED AND DATED ELECTRONICALLY.

DATE PREPARED	9/29/2016
ROUTE	I-55
STATE	MO
DISTRICT	SL
SHEET NO.	80
COUNTY	JEFFERSON
JOB NO.	J6I3131
CONTRACT ID.	
PROJECT NO.	
BRIDGE NO.	

DATE	DESCRIPTION

IF A SEAL IS PRESENT ON THIS SHEET IT HAS BEEN ELECTRONICALLY SEALED AND DATED.

MISSOURI HIGHWAYS AND TRANSPORTATION COMMISSION
105 WEST CAPITOL
JEFFERSON CITY, MO 65102
1-888-ASK-MODOT (1-888-275-6636)

TRAFFIC CONTROL
SINGLE LANE CLOSURE

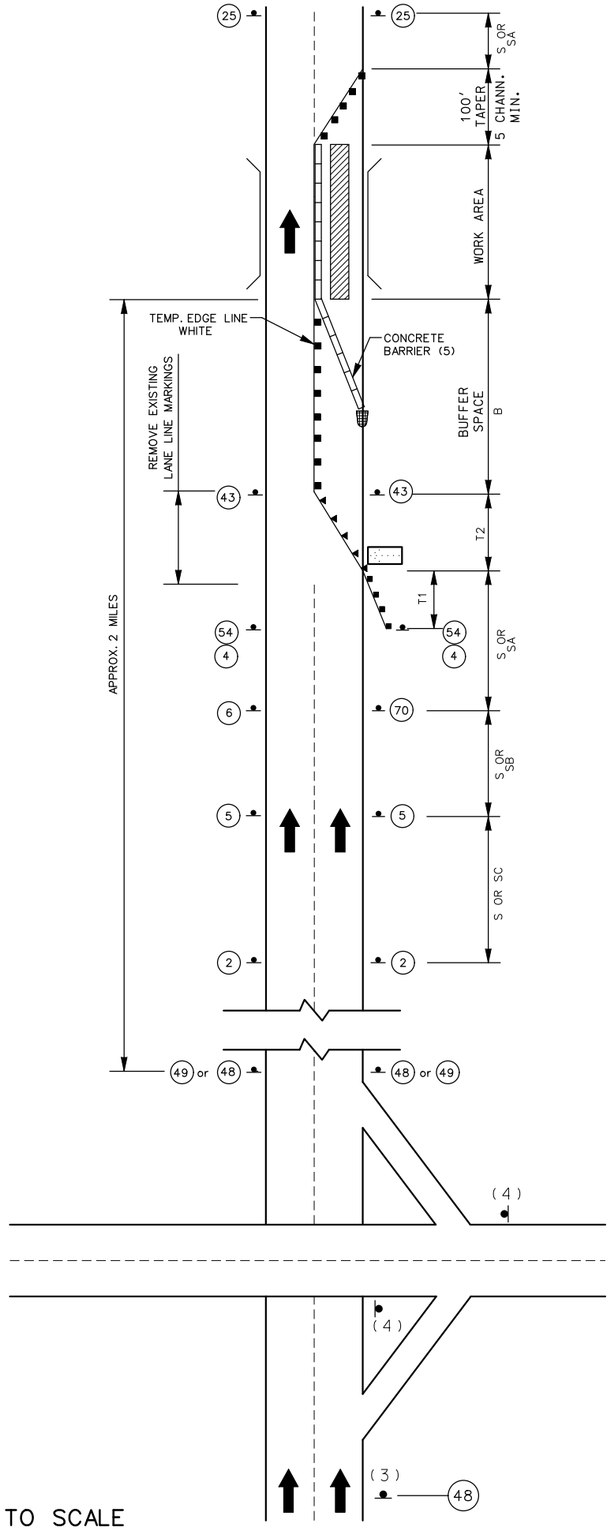

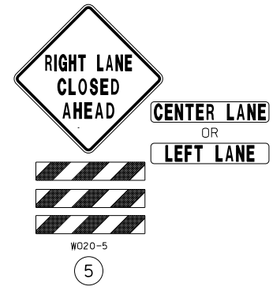

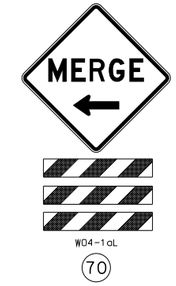

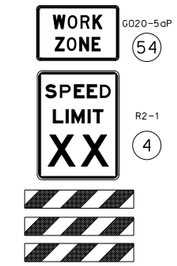

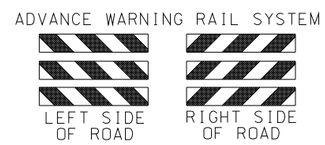

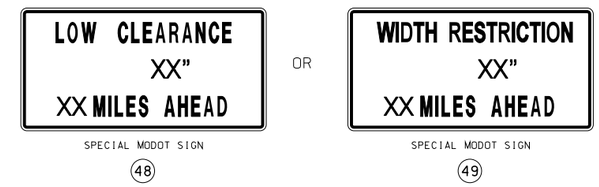

LANE CLOSURE WITH
WIDTH AND LANE RESTRICTIONS

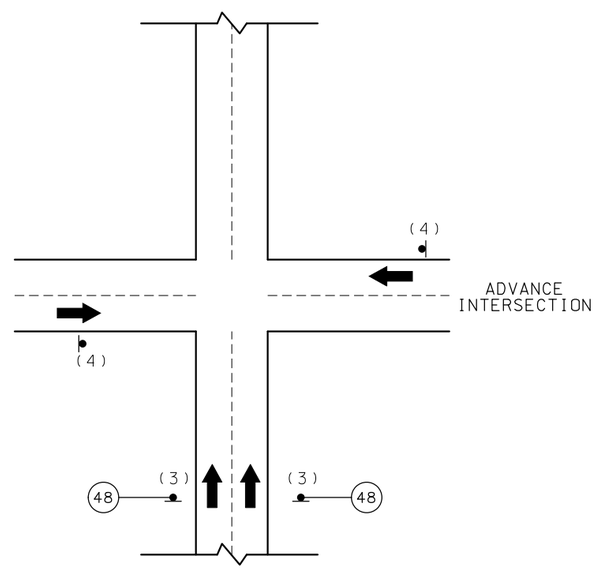

NOTES:

SEE EPG 616.12 WORK ZONE SPEED LIMITS FOR SPEED LIMIT GUIDELINES.

REVIEW 616.8.33 (TA-33) STATIONARY LANE CLOSURE ON A DIVIDED HIGHWAY AND 616.8.34 (TA-34) LANE CLOSURE WITH A TEMPORARY TRAFFIC BARRIER FOR LANE CLOSURE GUIDELINES.

A CMS AND/OR ALTERNATE ROUTE SIGNING SHOULD BE USED IN ADDITION TO THIS SIGNING.

WIDTH RESTRICTION OR LOW CLEARANCE SIGN MAY BE USED WITH OTHER TRAFFIC CONTROL SITUATIONS RESULTING IN A WIDTH RESTRICTION.

WIDTH RESTRICTION SHOWN ON SIGNS ARE EQUAL TO THE ACTUAL PAVEMENT WIDTH AT THE RESTRICTION.

(3) SIGN INSTALLED A MINIMUM OF 1000' IN ADVANCE OF THE OF THE LAST INTERCHANGE EXIT RAMP. INTERSECTION OR POINT WHERE A DETOUR OR TURN AROUND IS PROVIDED BEFORE THE CLEARANCE RESTRICTION WHEN AN EXIT IS UNAVAILABLE AT THE WORK LOCATION. SIGN PLACEMENT MAY DEPEND ON GEOMETRY AND LOCATION OF EXISTING SIGNS.

(4)

SIGN MAY BE MODIFIED BASED ON GEOMETRICS.

(5) FLARE BARRIER TO EXTEND BEYOND CLEAR ZONE OR FLARE BARRIER TO EDGE LINE APPROVED ENDTREATMENT.

TRAFFIC CONTROL LEGEND

- SIGN (SINGLE SIDED)
- DIRECTIONAL INDICATOR BARRICADE
- CHANNELIZER (TRIM-LINE)
- WORK AREA
- TEMPORARY CONCRETE BARRIER
- END TREATMENT
- FLASHING ARROW PANEL
- ADVANCE WARNING RAILS

DISCLAIMER

THE PROFESSIONAL WHOSE SIGNATURE AND PERSONAL SEAL APPEAR HEREON ASSUMES RESPONSIBILITY ONLY FOR WHAT APPEARS ON THIS PAGE, AND DISCLAIMS (PURSUANT TO SECTION 327.411 RSMO) SPECIFICATION, ESTIMATES, REPORTS, OR OTHER DOCUMENTS OR INSTRUMENTS NOT SEALED BY THE UNDERSIGNED PROFESSIONAL RELATING TO OR INTENDED TO BE USED FOR ANY PART OR PARTS OF THE PROJECT TO WHICH THIS PAGE REFERS.

NOT TO SCALE

STATE OF MISSOURI
SHIRLEY J. NORRIS
NUMBER PE-28779
PROFESSIONAL ENGINEER

THIS SHEET HAS BEEN SIGNED, SEALED AND DATED ELECTRONICALLY.

DATE PREPARED	
9/29/2016	
ROUTE	STATE
I-55	MO
DISTRICT	SHEET NO.
SL	81
COUNTY	
JEFFERSON	
JOB NO.	
J6I3131	
CONTRACT ID.	
PROJECT NO.	
BRIDGE NO.	

DATE	DESCRIPTION

IF A SEAL IS PRESENT ON THIS SHEET IT HAS BEEN ELECTRONICALLY SEALED AND DATED.

MISSOURI HIGHWAYS AND TRANSPORTATION COMMISSION

105 WEST CAPITOL
JEFFERSON CITY, MO 65102
1-888-ASK-MODOT (1-888-275-6636)

TRAFFIC CONTROL SHEET
LANE CLOSURE WITH WIDTH
AND LANE RESTRICTIONS

SHEET 76 OF 76

50A

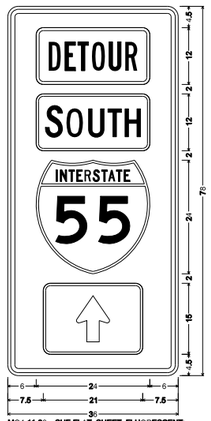

MO4-11-36 SHF-FLAT SHEET FLUORESCENT;
2.25" Radius, 0.875" Border, 0.625" Indent, Black on Orange;
Table of letter and object lefts.

	6.000
	6.000
	6.000
	7.500

50B

MO4-11-36 SHF-FLAT SHEET FLUORESCENT;
2.25" Radius, 0.875" Border, 0.625" Indent, Black on Orange;
Table of letter and object lefts.

	6.000
	6.000
	6.000
	7.500

50C

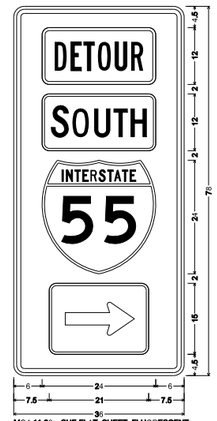

MO4-11-36 SHF-FLAT SHEET FLUORESCENT;
2.25" Radius, 0.875" Border, 0.625" Indent, Black on Orange;
Table of letter and object lefts.

	6.000
	6.000
	6.000
	7.500

50D

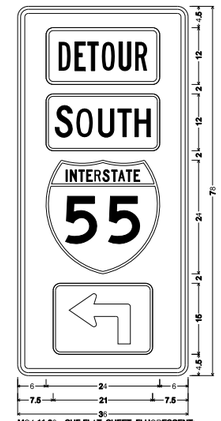

MO4-11-36 SHF-FLAT SHEET FLUORESCENT;
2.25" Radius, 0.875" Border, 0.625" Indent, Black on Orange;
Table of letter and object lefts.

	6.000
	6.000
	6.000
	7.500

50E

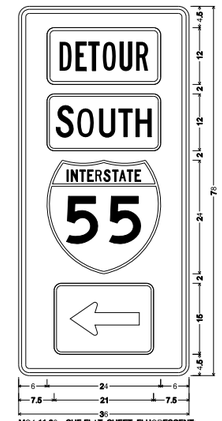

MO4-11-36 SHF-FLAT SHEET FLUORESCENT;
2.25" Radius, 0.875" Border, 0.625" Indent, Black on Orange;
Table of letter and object lefts.

	6.000
	6.000
	6.000
	7.500

50H

MO4-11-36 SHF-FLAT SHEET FLUORESCENT;
2.25" Radius, 0.875" Border, 0.625" Indent, Black on Orange;
Table of letter and object lefts.

	6.000
	6.000
	6.000
	7.500

50K

MO4-11-36 SHF-FLAT SHEET FLUORESCENT;
2.25" Radius, 0.875" Border, 0.625" Indent, Black on Orange;
Table of letter and object lefts.

	6.000
	6.000
	6.000
	7.500

50L

MO4-11-36 SHF-FLAT SHEET FLUORESCENT;
2.25" Radius, 0.875" Border, 0.625" Indent, Black on Orange;
Table of letter and object lefts.

	6.000
	6.000
	6.000
	7.500

TRAFFIC CONTROL SIGN DETAILS

DISCLAIMER
THE PROFESSIONAL WHOSE SIGNATURE AND PERSONAL SEAL APPEAR HEREON ASSUMES RESPONSIBILITY ONLY FOR WHAT APPEARS ON THIS PAGE, AND DISCLAIMS (PURSUANT TO SECTION 327.411 RSMO) SPECIFICATION, ESTIMATES, REPORTS, OR OTHER DOCUMENTS OR INSTRUMENTS NOT SEALED BY THE UNDERSIGNED PROFESSIONAL RELATING TO OR INTENDED TO BE USED FOR ANY PART OR PARTS OF THE PROJECT TO WHICH THIS PAGE REFERS.

STATE OF MISSOURI
SHIRLEY J. NORRIS
NUMBER PE-28779
PROFESSIONAL ENGINEER

THIS SHEET HAS BEEN SIGNED, SEALED AND DATED ELECTRONICALLY.

DATE PREPARED	9/29/2016
ROUTE	I-55
STATE	MO
DISTRICT	SL
SHEET NO.	82
COUNTY	JEFFERSON
JOB NO.	J6I3131
CONTRACT ID.	
PROJECT NO.	
BRIDGE NO.	

DATE	DESCRIPTION

IF A SEAL IS PRESENT ON THIS SHEET IT HAS BEEN ELECTRONICALLY SEALED AND DATED.

MISSOURI HIGHWAYS AND TRANSPORTATION COMMISSION
105 WEST CAPITOL
JEFFERSON CITY, MO 65102
1-888-ASK-MODOT (1-888-275-6636)

TRAFFIC CONTROL
DETOUR SIGN DETAILS

SHEET 1 OF 3

51A

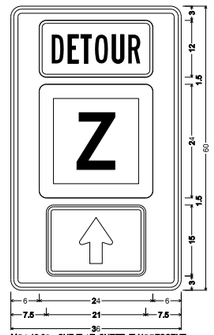

MO4-12-36 SHF-FLAT SHEET FLUORESCENT;
2.25" Radius, 0.875" Border, 0.625" Indent, Black on Orange;
Table of letter and object lefts.

	6.000
	6.000
	7.500

51D

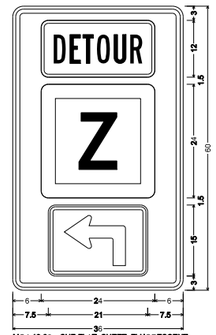

MO4-12-36 SHF-FLAT SHEET FLUORESCENT;
2.25" Radius, 0.875" Border, 0.625" Indent, Black on Orange;
Table of letter and object lefts.

	6.000
	6.000
	7.500

51E

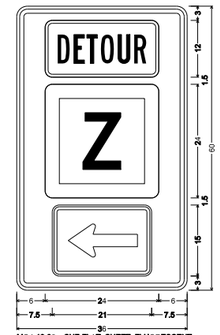

MO4-12-36 SHF-FLAT SHEET FLUORESCENT;
2.25" Radius, 0.875" Border, 0.625" Indent, Black on Orange;
Table of letter and object lefts.

	6.000
	6.000
	7.500

51F

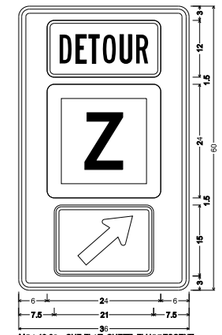

MO4-12-36 SHF-FLAT SHEET FLUORESCENT;
2.25" Radius, 0.875" Border, 0.625" Indent, Black on Orange;
Table of letter and object lefts.

	6.000
	6.000
	7.500

53A

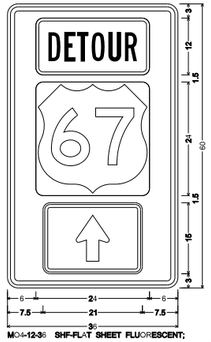

MO4-12-36 SHF-FLAT SHEET FLUORESCENT;
2.25" Radius, 0.875" Border, 0.625" Indent, Black on Orange;
Table of letter and object lefts.

	6.000
	6.000
	7.500

53B

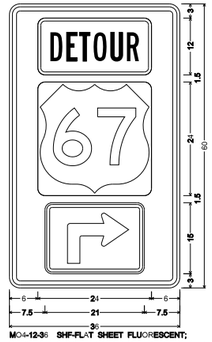

MO4-12-36 SHF-FLAT SHEET FLUORESCENT;
2.25" Radius, 0.875" Border, 0.625" Indent, Black on Orange;
Table of letter and object lefts.

	6.000
	6.000
	7.500

53C

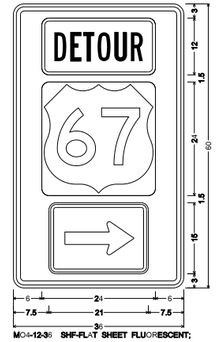

MO4-12-36 SHF-FLAT SHEET FLUORESCENT;
2.25" Radius, 0.875" Border, 0.625" Indent, Black on Orange;
Table of letter and object lefts.

	6.000
	6.000
	7.500

53D

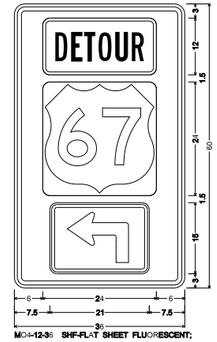

MO4-12-36 SHF-FLAT SHEET FLUORESCENT;
2.25" Radius, 0.875" Border, 0.625" Indent, Black on Orange;
Table of letter and object lefts.

	6.000
	6.000
	7.500

53E

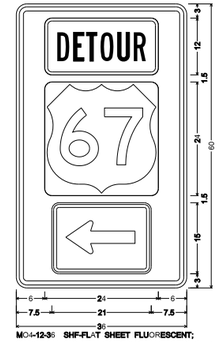

MO4-12-36 SHF-FLAT SHEET FLUORESCENT;
2.25" Radius, 0.875" Border, 0.625" Indent, Black on Orange;
Table of letter and object lefts.

	6.000
	6.000
	7.500

TRAFFIC CONTROL SIGN DETAILS

DISCLAIMER
THE PROFESSIONAL WHOSE SIGNATURE AND PERSONAL SEAL APPEAR HEREON ASSUMES RESPONSIBILITY ONLY FOR WHAT APPEARS ON THIS PAGE, AND DISCLAIMS (PURSUANT TO SECTION 327.411 RSMO) SPECIFICATION, ESTIMATES, REPORTS, OR OTHER DOCUMENTS OR INSTRUMENTS NOT SEALED BY THE UNDERSIGNED PROFESSIONAL RELATING TO OR INTENDED TO BE USED FOR ANY PART OR PARTS OF THE PROJECT TO WHICH THIS PAGE REFERS.

STATE OF MISSOURI
SHIRLEY J. NORRIS
NUMBER PE-28779
PROFESSIONAL ENGINEER

THIS SHEET HAS BEEN SIGNED, SEALED AND DATED ELECTRONICALLY.

DATE PREPARED
9/29/2016

ROUTE	STATE
I-55	MO
DISTRICT	SHEET NO.
SL	83

COUNTY
JEFFERSON

JOB NO.
J6I3131

CONTRACT ID.

PROJECT NO.

BRIDGE NO.

DATE	DESCRIPTION

IF A SEAL IS PRESENT ON THIS SHEET IT HAS BEEN ELECTRONICALLY SEALED AND DATED.

MISSOURI HIGHWAYS AND TRANSPORTATION COMMISSION
105 WEST CAPITOL
JEFFERSON CITY, MO 65102
1-888-ASK-MODOT (1-888-275-6636)

TRAFFIC CONTROL
DETOUR SIGN DETAILS

SHEET 2 OF 3

55

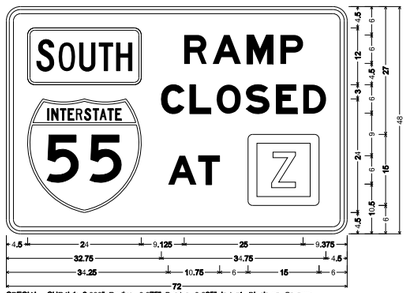

SPECIAL SHR4L1; 3.000" Radius, 0.875" Border, 0.625" Indent, Black on Orange;
[RAMP] E Mod; [CLOSED] E Mod [] D; [AT] E Mod [] D;
Table of letter and object lefts.

R 4.500	R 37.625	A 43.625	M 50.875	P 57.875
9 4.500	C 32.750	L 38.750	O 44.500	S 50.750	E 57.000	D 62.750
A 34.250	T 40.625	D 51.000

56

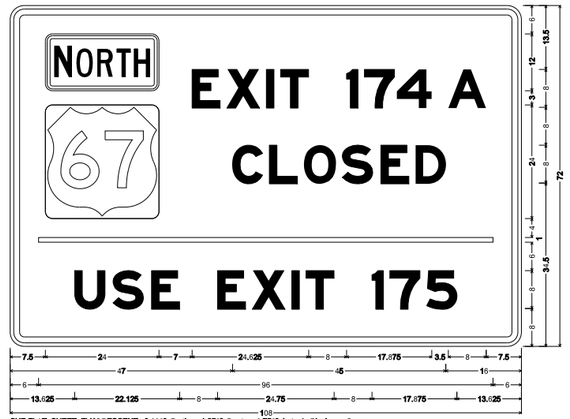

SHF-FLAT SHEET FLUORESCENT; 3.000" Radius, 1.250" Border, 0.750" Indent, Black on Orange;
[EXIT 174 A] E Mod 85% spacing; [CLOSED] E Mod 85% spacing; [USE EXIT 175] E Mod 85% spacing;
Table of letter and object lefts.

E 7.500	E 36.500	X 45.750	I 54.125	T 57.125	I 71.125	T 74.875	4 81.625	A 92.500
9 7.500	C 47.000	L 54.750	O 62.125	S 70.250	E 78.250	D 85.625
6.000
U 13.625	S 21.750	E 29.875	E 43.750	X 51.125	I 59.500	T 62.500	I 76.500	T 80.250	S 88.000

57

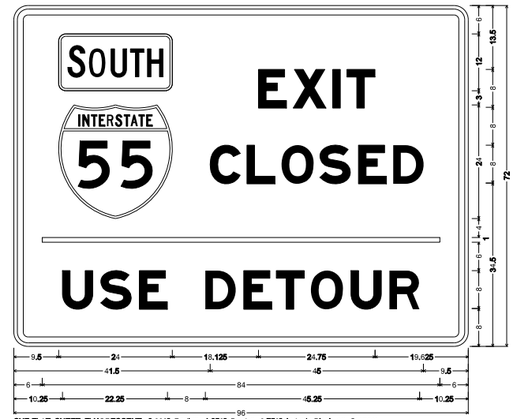

SHF-FLAT SHEET FLUORESCENT; 3.000" Radius, 1.250" Border, 0.750" Indent, Black on Orange;
[EXIT] E Mod 85% spacing; [CLOSED] E Mod 85% spacing; [USE DETOUR] E Mod 85% spacing;
Table of letter and object lefts.

E 9.500	E 51.625	X 59.000	I 67.375	T 70.375
9 9.500	C 41.500	L 49.250	O 56.625	S 64.750	E 72.750	D 80.125
6.000
U 10.250	S 18.375	E 26.500	D 40.500	E 48.625	T 56.500	O 62.750	U 71.250	R 79.375

DISCLAIMER

THE PROFESSIONAL WHOSE SIGNATURE AND PERSONAL SEAL APPEAR HEREON ASSUMES RESPONSIBILITY ONLY FOR WHAT APPEARS ON THIS PAGE, AND DISCLAIMS (PURSUANT TO SECTION 327.411 RSMO) SPECIFICATION, ESTIMATES, REPORTS, OR OTHER DOCUMENTS OR INSTRUMENTS NOT SEALED BY THE UNDERSIGNED PROFESSIONAL RELATING TO OR INTENDED TO BE USED FOR ANY PART OR PARTS OF THE PROJECT TO WHICH THIS PAGE REFERS.

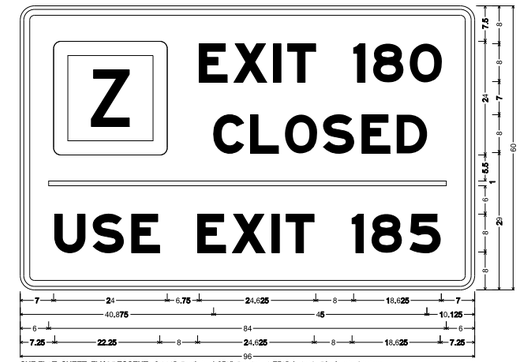

SHF-FLAT SHEET FLUORESCENT; 3.000" Radius, 1.250" Border, 0.750" Indent, Black on Orange;
[EXIT 180] E Mod 85% spacing; [CLOSED] E Mod 85% spacing; [USE EXIT 185] E Mod 85% spacing;
Table of letter and object lefts.

Z 7.000	E 37.750	X 45.125	I 53.500	T 56.500	I 70.375	8 74.500	O 82.375
C 40.875	L 48.625	O 56.000	S 64.125	E 72.125	D 79.500
6.000
U 7.250	S 15.375	E 23.500	E 37.500	X 44.750	I 53.125	T 56.125	I 70.125	8 74.250	S 82.375

58

58 SB

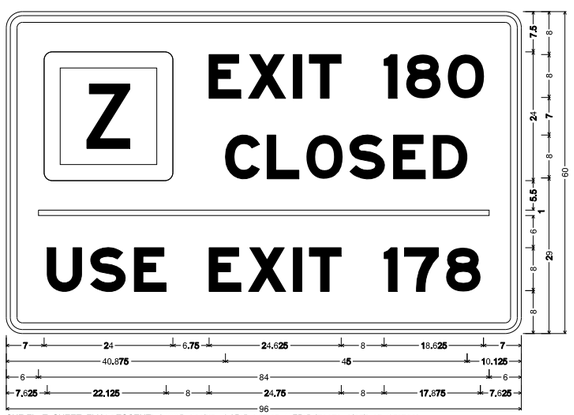

SHF-FLAT SHEET FLUORESCENT; 3.000" Radius, 1.250" Border, 0.750" Indent, Black on Orange;
[EXIT 180] E Mod 85% spacing; [CLOSED] E Mod 85% spacing; [USE EXIT 178] E Mod 85% spacing;
Table of letter and object lefts.

Z 7.000	E 37.750	X 45.125	I 53.500	T 56.500	I 70.375	8 74.500	O 82.375
C 40.875	L 48.625	O 56.000	S 64.125	E 72.125	D 79.500
6.000
U 7.625	S 15.750	E 23.875	E 37.750	X 45.125	I 53.500	T 56.500	I 70.500	7 74.250	8 82.000

60

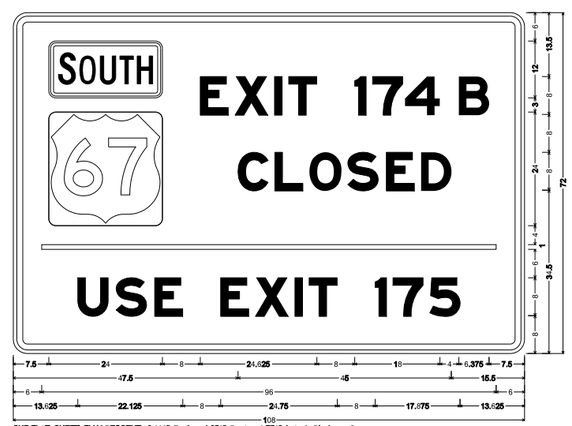

SHF-FLAT SHEET FLUORESCENT; 3.000" Radius, 1.250" Border, 0.750" Indent, Black on Orange;
[EXIT 174 B] E Mod 85% spacing; [CLOSED] E Mod 85% spacing; [USE EXIT 175] E Mod 85% spacing;
Table of letter and object lefts.

E 7.500	E 39.500	X 46.875	I 55.125	T 58.250	I 72.125	T 75.875	4 82.750	B 94.125
9 7.500	C 47.500	L 55.250	O 62.625	S 70.750	E 78.750	D 86.125
6.000
U 13.625	S 21.750	E 29.875	E 43.750	X 51.125	I 59.500	T 62.500	I 76.500	T 80.250	S 88.000

61

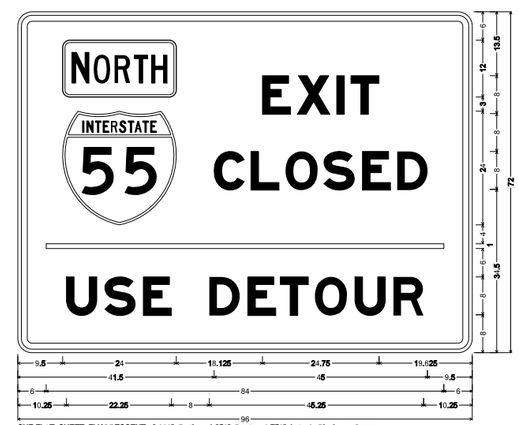

SHF-FLAT SHEET FLUORESCENT; 3.000" Radius, 1.250" Border, 0.750" Indent, Black on Orange;
[EXIT] E Mod 85% spacing; [CLOSED] E Mod 85% spacing; [USE DETOUR] E Mod 85% spacing;
Table of letter and object lefts.

E 9.500	E 51.625	X 59.000	I 67.375	T 70.375
9 9.500	C 41.500	L 49.250	O 56.625	S 64.750	E 72.750	D 80.125
6.000
U 10.250	S 18.375	E 26.500	D 40.500	E 48.625	T 56.500	O 62.750	U 71.250	R 79.375

TRAFFIC CONTROL SIGN DETAILS

STATE OF MISSOURI
SHIRLEY J. NORRIS
NUMBER PE-28779
PROFESSIONAL ENGINEER

THIS SHEET HAS BEEN SIGNED, SEALED AND DATED ELECTRONICALLY.

DATE PREPARED 9/29/2016	
ROUTE I-55	STATE MO
DISTRICT SL	SHEET NO. 84
COUNTY JEFFERSON	
JOB NO. J6I3131	
CONTRACT ID.	
PROJECT NO.	
BRIDGE NO.	

DATE	DESCRIPTION

IF A SEAL IS PRESENT ON THIS SHEET IT HAS BEEN ELECTRONICALLY SEALED AND DATED.

MISSOURI HIGHWAYS AND TRANSPORTATION COMMISSION
105 WEST CAPITOL
JEFFERSON CITY, MO 65102
1-888-ASK-MODOT (1-888-275-6636)

TRAFFIC CONTROL
DETOUR SIGN DETAILS

SHEET 3 OF 3

SEC/SUR 416 TWP 40N RGE 6E

U.I.P. AND REHAB EXISTING (50′-60′-50′) CONTINUOUS CONCRETE VOIDED SLAB SPANS (11° 01′ 00″ LA)

General Notes:

Design Specifications:

2002 - AASHTO LFD (17th Edition) Standard Specifications
Load Factor Design
Bridge Deck Rating = 4

Miscellaneous:

In order to maintain grade and a minimum thickness of overlay as shown on plans it may be necessary to use additional quantities of overlay at various locations throughout the structure. The cost of furnishing and installing the overlay will be considered completely covered in the contract unit price, including all additional labor, materials or equipment for variations in thickness of overlay.

Roadway surfacing adjacent to bridge ends shall match bridge overlay (Roadway Item).

Outline of old work is indicated by light dashed lines. Heavy lines indicate new work.

Contractor shall verify all dimensions in field before ordering new material.

Traffic Handling:

Traffic to be maintained on structure during construction. See Roadway Plans for traffic control.

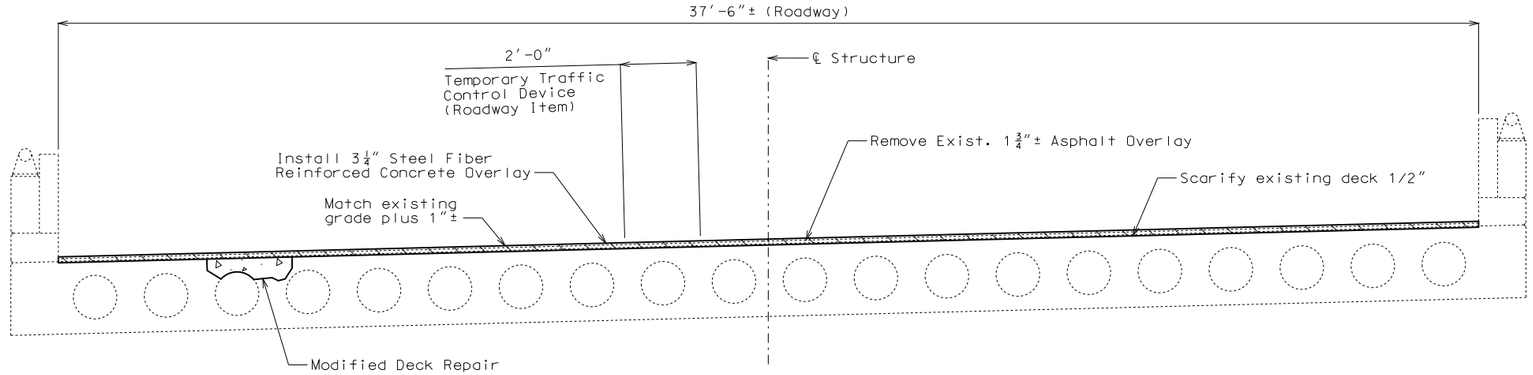

TYPICAL SECTION THRU EXISTING SLAB

Estimated Quantities

Item		Total
Scarification of Bridge Deck	sq. yard	677
Removal of Asphalt Wearing Surface	sq. foot	6095
Steel Fiber Reinforced Concrete Overlay	sq. yard	677
Modified Deck Repair	sq. foot	900

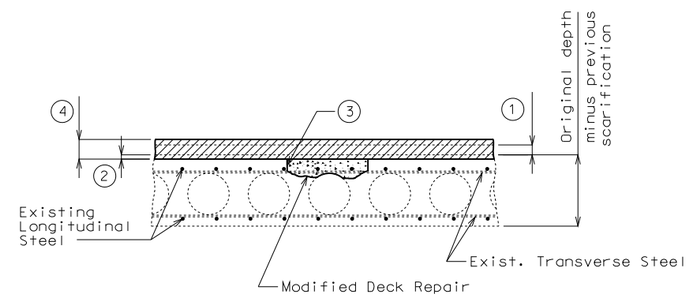

MODIFIED DECK REPAIR

1. Remove existing asphalt overlay.
2. Scarify existing deck 1/2″.
3. One inch vertical side shall be established outside the deteriorated area. See Sec 704.
4. 3 1/4″ (min.) for Steel Fiber Reinforced Concrete Overlay.

Notes:

An exposed void in the deck shall be patched as approved by the engineer in a manner that shall maintain the void area completely free of concrete. Cost of patching an exposed void will be considered completely covered by the contract unit price for Modified Deck Repair.

Concrete in Modified Deck Repair may be poured monolithically if existing steel is not exposed by more than half the diameter of a bar.

REPAIRS TO BRIDGE: I-55 NB OVER CENTRAL AVE.

ROUTE I-55 FROM ROUTE Z TO ROUTE 67

ABOUT 4.1 MILES SOUTH OF ROUTE Z

STA. 840+06.71± (Match Existing)

Detailed Apr. 2016
Checked July 2016

Note: This drawing is not to scale. Follow dimensions.

STATE OF MISSOURI
DAVID JAMES HAGEMEYER
NUMBER PE-2007002788
PROFESSIONAL ENGINEER

THIS SHEET HAS BEEN SIGNED, SEALED AND DATED ELECTRONICALLY.

DATE PREPARED 10/3/2016

ROUTE	STATE
I-55	MO
DISTRICT	SHEET NO.
BR	1

COUNTY JEFFERSON

JOB NO. J6I3131

CONTRACT ID.

PROJECT NO.

BRIDGE NO. A07974

DATE	DESCRIPTION

IF A SEAL IS PRESENT ON THIS SHEET IT HAS BEEN ELECTRONICALLY SEALED AND DATED.

MISSOURI HIGHWAYS AND TRANSPORTATION COMMISSION

105 WEST CAPITOL
JEFFERSON CITY, MO 65102
1-888-ASK-MODOT (1-888-275-6636)

SEC/SUR 416 TWP 40N RGE 6E

U.I.P. AND REHAB EXISTING (50'-60'-50') CONTINUOUS CONCRETE VOIDED SLAB SPANS (11° 01' 00" LA)

General Notes:

Design Specifications:

2002 - AASHTO LFD (17th Edition) Standard Specifications
Load Factor Design
Bridge Deck Rating = 4

Miscellaneous:

In order to maintain grade and a minimum thickness of overlay as shown on plans it may be necessary to use additional quantities of overlay at various locations throughout the structure. The cost of furnishing and installing the overlay will be considered completely covered in the contract unit price, including all additional labor, materials or equipment for variations in thickness of overlay.

Roadway surfacing adjacent to bridge ends shall match bridge overlay (Roadway Item).

Outline of old work is indicated by light dashed lines. Heavy lines indicate new work.

Contractor shall verify all dimensions in field before ordering new material.

Traffic Handling:

Traffic to be maintained on structure during construction. See Roadway Plans for traffic control.

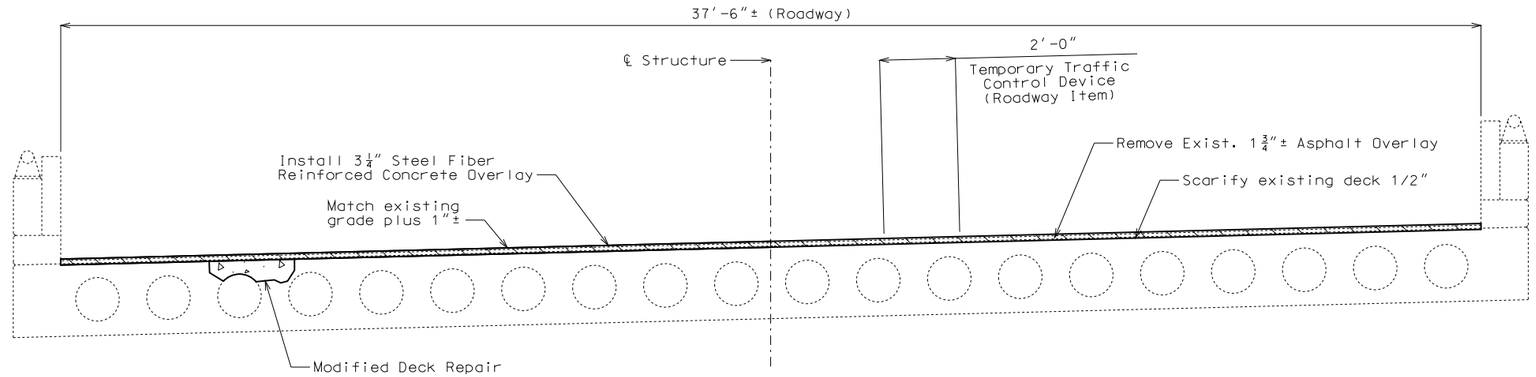

TYPICAL SECTION THRU EXISTING SLAB

Estimated Quantities		
Item		Total
Scarification of Bridge Deck	sq. yard	677
Removal of Asphalt Wearing Surface	sq. foot	6095
Steel Fiber Reinforced Concrete Overlay	sq. yard	677
Modified Deck Repair	sq. foot	900

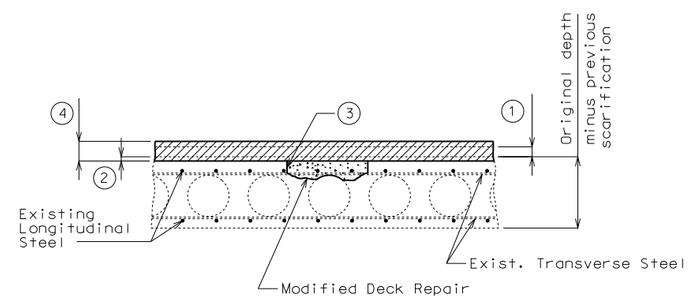

MODIFIED DECK REPAIR

1. Remove existing asphalt overlay.
2. Scarify existing deck 1/2".
3. One inch vertical side shall be established outside the deteriorated area. See Sec 704.
4. 3 1/4" (min.) for Steel Fiber Reinforced Concrete Overlay.

Notes:

An exposed void in the deck shall be patched as approved by the engineer in a manner that shall maintain the void area completely free of concrete. Cost of patching an exposed void will be considered completely covered by the contract unit price for Modified Deck Repair.

Concrete in Modified Deck Repair may be poured monolithically if existing steel is not exposed by more than half the diameter of a bar.

REPAIRS TO BRIDGE: I-55 SB OVER CENTRAL AVE.

ROUTE I-55 FROM ROUTE Z TO ROUTE 67

ABOUT 4.1 MILES SOUTH OF ROUTE Z

STA. 839+93.18± (Match Existing)

Detailed Apr. 2016
Checked July 2016

Note: This drawing is not to scale. Follow dimensions.

STATE OF MISSOURI
DAVID JAMES HAGEMEYER
NUMBER PE-2007002788
PROFESSIONAL ENGINEER

THIS SHEET HAS BEEN SIGNED, SEALED AND DATED ELECTRONICALLY.

DATE PREPARED 10/3/2016

ROUTE	STATE
I-55	MO
DISTRICT	SHEET NO.
BR	1

COUNTY JEFFERSON

JOB NO. J6I3131

CONTRACT ID.

PROJECT NO.

BRIDGE NO. A07975

DATE	DESCRIPTION

MISSOURI HIGHWAYS AND TRANSPORTATION COMMISSION

105 WEST CAPITOL
JEFFERSON CITY, MO 65102
1-888-ASK-MODOT (1-888-275-6636)

IF A SEAL IS PRESENT ON THIS SHEET IT HAS BEEN ELECTRONICALLY SEALED AND DATED.

SEC/SUR 1906 TWP 40N RGE 6E

U.I.P. AND REHAB EXISTING (48'-55'-55'-38') CONTINUOUS COMPOSITE WIDE FLANGE BEAM SPANS (5° 49' 00" RA)

General Notes:

Design Specifications:
2002 AASHTO LFD (17th Ed.) Standard Specifications
Load Factor Design
Bridge Deck Rating = 6

Design Loading:
HS20-44 and Modified 24,000 lb Tandem Axle
(1961 & New Construction)

Design Unit Stresses:

Class B-1 Concrete (Curb and Parapet)	f'c = 4,000 psi
Class B-2 Concrete (Slab)	f'c = 4,000 psi
Reinforcing Steel (Grade 60)	fy = 60,000 psi

Miscellaneous:
In order to maintain grade and a minimum thickness of overlay as shown on plans it may be necessary to use additional quantities of overlay at various locations throughout the structure. The cost of furnishing and installing the overlay will be considered completely covered in the contract unit price, including all additional labor, materials or equipment for variations in thickness of overlay.

Roadway surfacing adjacent to bridge overlay ends shall match bridge overlay (Roadway Item).

Outline of old work is indicated by light dashed lines. Heavy lines indicate new work.

Contractor shall verify all dimensions in field before ordering new material.

Contractor shall remove all asphalt overlay to existing concrete substrate.

Traffic Handling:
Traffic to be maintained on structure during construction. See Roadway Plans for traffic control and staged construction details.

Structural Steel Protective Coating:
Protective Coating: System G in accordance with Sec 1081.

Coating Limits: All existing structural steel within 10 feet of ends of stringers at End Bents No. 1 & 5. Within these limits, items to be recoated shall include stringers, diaphragms, stiffeners, bearings and miscellaneous structural steel items.

Surface Preparation: Surface preparation of the existing steel shall be in accordance with Sec 1081 for "Recoating of Structural Steel (System G, H or I)". The cost of surface preparation will be considered completely covered by the contract unit price per sq. foot for "Surface Preparation for Recoating Structural Steel".

Prime Coat: The cost of the prime coat on existing structural steel will be considered completely covered by the contract unit price per sq. foot for "Field Application of Inorganic Zinc Primer". Tint of the prime coat for System G shall be similar to the color of the field coat to be used.

Field Coat: The color of the finish field coat shall be Gray (Federal Standard #26373). The cost of the intermediate field coat will be considered completely covered by the contract unit price per sq. foot for "Intermediate Field Coat (System G)". The cost of the finish field coat will be considered completely covered by the contract unit price per sq. foot for "Finish Field Coat (System G)".

Sec 1081.4.5 shall be modified such that the word "RECOATED" is replaced by the word "RECOATED - SYSTEM G - EXPANSION AREAS ONLY".

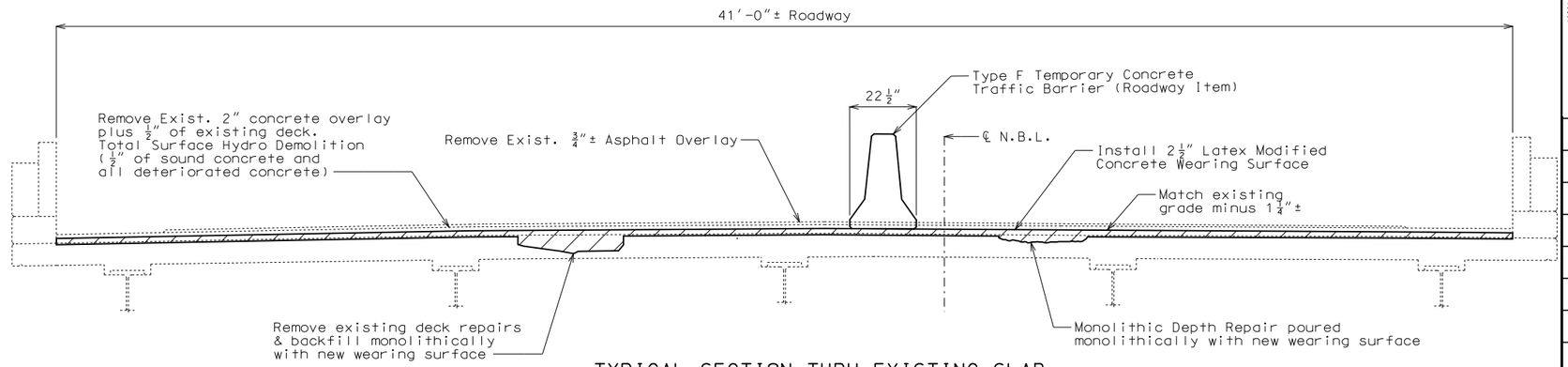

TYPICAL SECTION THRU EXISTING SLAB

Estimated Quantities

Item		Total
Removal of Asphalt Wearing Surface	sq. foot	7183
Removal of Concrete Wearing Surface	sq. foot	8180
Removal of Existing Expansion Joint & Adjacent Concrete	linear foot	82
Remove and Replace Curb & Blockout	linear foot	12
Removal of Existing Deck Repairs	sq. foot	1100
Latex Modified High Early Strength Concrete Wearing Surface	sq. yard	909
Class B-2 Concrete	cu. yard	8.2
Total Surface Hydro Demolition	sq. yard	909
Clean and Epoxy Seal	sq. foot	380
Plugging Curb Outlet	each	18
* Monolithic Deck Repair	cu. yard	6.3
Protective Coating - Concrete Bents and Piers (Epoxy)	lump sum	1
Surface Preparation for Recoating Structural Steel	sq. foot	800
Field Application of Inorganic Zinc Primer	sq. foot	800
Intermediate Field Coat System (System G)	sq. foot	800
Finish Field Coat (System G)	sq. foot	800
Cored Slab Drain	each	14
Strip Seal Expansion Joint System	linear foot	82
Reinforcing Steel (Epoxy Coated)	pound	920

* Monolithic Deck Repairs will be made at a fixed unit price (See Job Special Provisions).

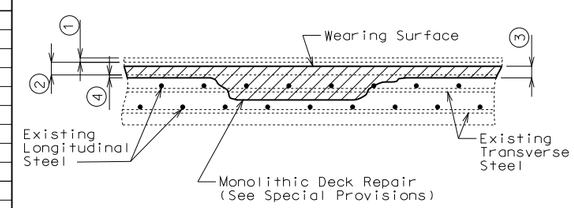

MONOLITHIC DECK REPAIR

1. Remove existing 3/4" asphalt overlay.
2. Remove existing 2" concrete overlay plus 1/2" of original deck.
3. 2 1/2" (Min.) Latex Modified Concrete Wearing Surface
4. Total surface hydro demolition of existing deck (1/2" min. of sound concrete and all deteriorated concrete).

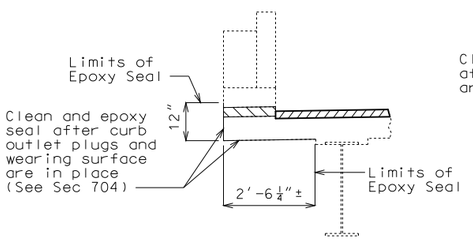

SECTION THRU EDGE OF SLAB SHOWING CLEAN AND EPOXY SEAL

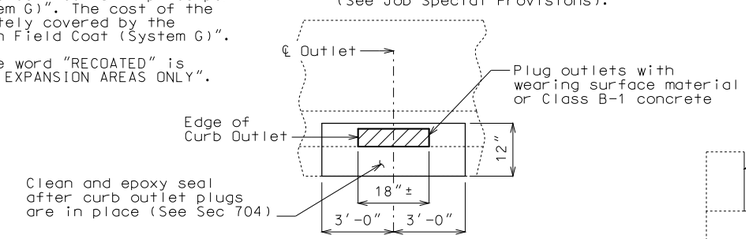

PART ELEVATION SHOWING EXISTING CURB OUTLETS TO BE PLUGGED & SHOWING LIMITS OF EPOXY SEAL

Notes:

Cost of labor and materials required to plug existing curb outlets will be considered completely covered by the contract unit price for Plugging Curb Outlet.

Estimated material required to fill all curb outlets is 0.5 cubic yards.

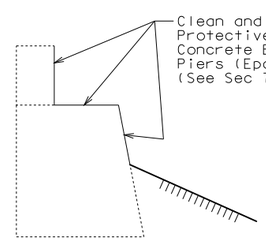

TYPICAL SECTION THRU END BENTS NO.1 & 5 SHOWING PROTECTIVE COATING

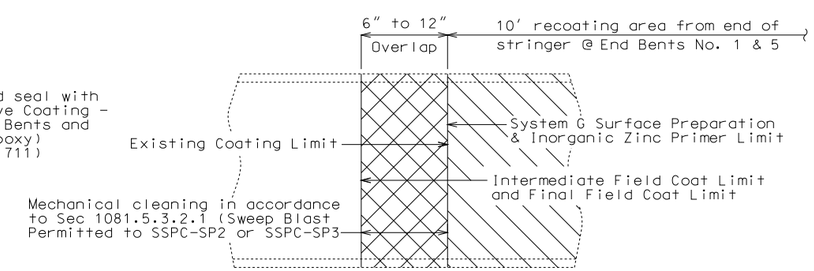

PART ELEVATION SHOWING LIMITS OF PAINT OVERLAP NEAR BENTS NO. 1 & 5

Note:
All reinforcing steel in slab that is loose and exposed shall be removed as directed by the engineer. Removal of reinforcing steel and loose concrete will be considered completely covered by the contract unit price for Clean and Epoxy Seal.

Detailed Jul. 2016
Checked Aug. 2016

Note: This drawing is not to scale. Follow dimensions.

Sheet No. 1 of 5

REPAIRS TO BRIDGE: I-55 NB OVER ROUTE 67

ROUTE I-55 N.B. FROM ROUTE 61 TO ROUTE A

ABOUT 1.2 MILES S. OF ROUTE A

STA. 953+96.32 ± (Match Existing)

STD. 617.20
STD. 706.35

STATE OF MISSOURI
DAVID JAMES HAGEMEYER
NUMBER PE-2007002788
PROFESSIONAL ENGINEER
THIS SHEET HAS BEEN SIGNED, SEALED AND DATED ELECTRONICALLY.

DATE PREPARED 10/28/2016

ROUTE	STATE
I-55	MO
DISTRICT	SHEET NO.
BR	1

COUNTY: JEFFERSON
JOB NO.: J6I3131
CONTRACT ID.:
PROJECT NO.:
BRIDGE NO.: A07997

DATE	DESCRIPTION

MISSOURI HIGHWAYS AND TRANSPORTATION COMMISSION
105 WEST CAPITOL
JEFFERSON CITY, MO 65102
1-888-ASK-MODOT (1-888-275-6636)

IF A SEAL IS PRESENT ON THIS SHEET IT HAS BEEN ELECTRONICALLY SEALED AND DATED.

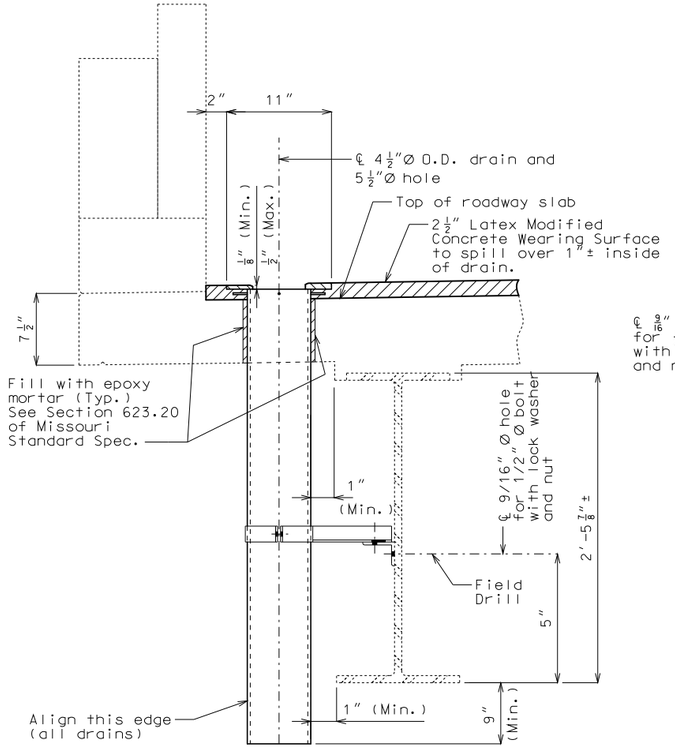

PART SECTION NEAR DRAIN

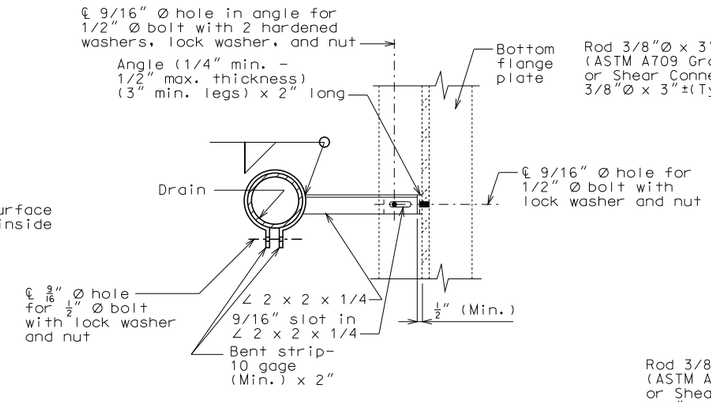

PART SECTION SHOWING BRACKET ASSEMBLY

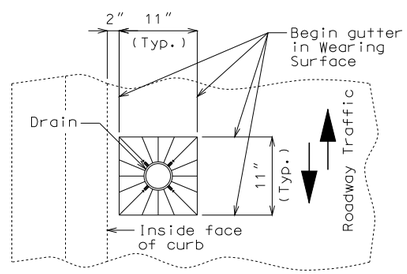

PART PLAN OF SLAB AT DRAIN

SLAB DRAIN DETAILS

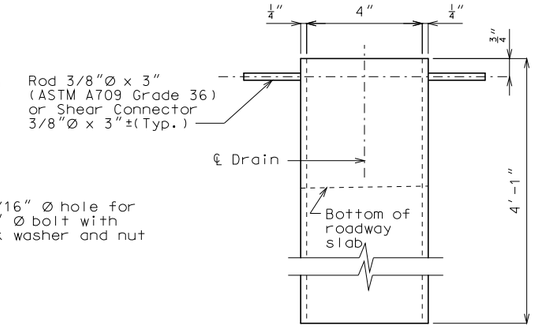

ELEVATION OF DRAIN

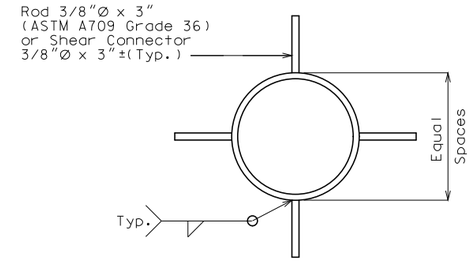

PLAN OF DRAIN

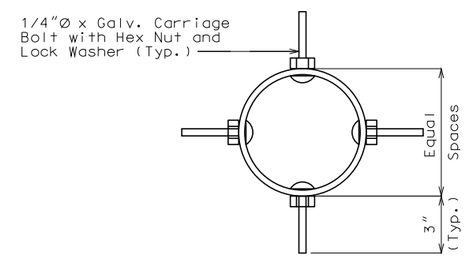

PLAN OF OPTIONAL FRP DRAIN

General Notes:

Contractor shall have the option to construct either steel or Fiberglass Reinforced Polymer (FRP) slab drains. All drains shall be of same type.

Slab drain bracket assembly shall be ASTM A709 Grade 36 steel.

The bracket assembly shall be galvanized in accordance with ASTM A123.

All bolts, hardened washers, lock washers and nuts shall be galvanized in accordance with ASTM A153.

Shop drawings will not be required for the slab drains and the bracket assembly.

Cost of cored slab drains, complete in place, will be considered completely covered by the contract unit price for Cored Slab Drain.

Holes for slab drains shall be cored. Percussion drilling will not be permitted.

Slab drain locations may be shifted the minimum extent necessary to avoid slab reinforcement and to allow for field drilling bolt hole in web of existing stringer or girder to avoid diaphragm connections and splices for bracket assembly attachment.

For details of plugging existing curb outlets, see Sheet No. 1.

Notes for Steel Drain:

Slab drains may be fabricated from 1/4" structural steel pipe ASTM A500 or A501.

The drains shall be galvanized in accordance with ASTM A123.

Drains shall be inserted through slab such that damage to galvanized coating is minimized.

Notes for Optional FRP Drain:

Drains shall be machine filament-wound thermosetting resin pipe meeting the requirements of ASTM D2996 with the following exceptions:

Minimum reinforced wall thickness shall be 1/4 inch.

The resin used shall be ultraviolet (UV) resistant and/or have UV inhibitors mixed throughout. Drains may have an exterior coating for additional UV resistance. Care shall be taken to avoid damage to exterior coating during installation.

The color of the slab drain shall be Gray (Federal Standard #26373). The color shall be uniform throughout the resin and any coating used.

The combination of materials used in the manufacture of the drains shall be tested for UV resistance in accordance with ASTM D4329 Cycle A. The representative material shall withstand at least 500 hours of testing with only minor discoloration and without any physical deterioration. The contractor shall furnish the results of the required ultraviolet testing prior to acceptance of the slab drains.

At the contractor's option, drains may be field cut. The method of cutting FRP slab drain shall be as recommended by the manufacturer to ensure a smooth, chip free cut.

No additional payment will be made for this substitution.

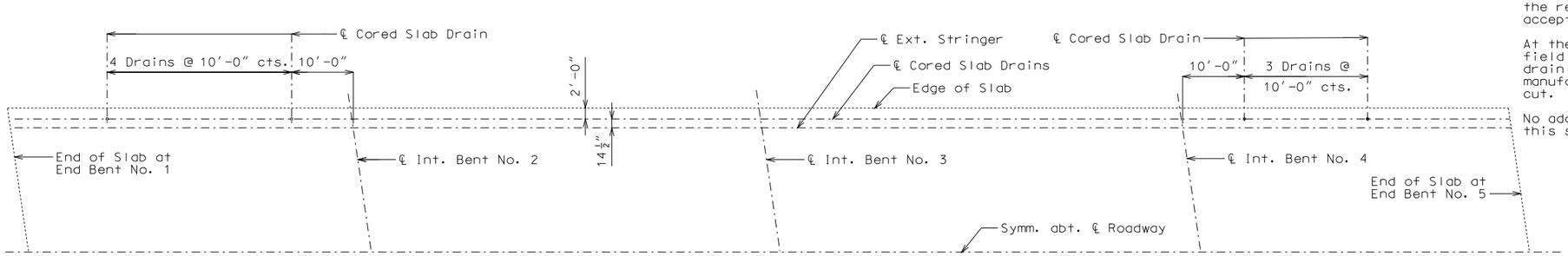

PLAN OF SLAB SHOWING LOCATION OF CORED SLAB DRAINS

Detailed Jul. 2016
Checked Aug. 2016

Note: This drawing is not to scale. Follow dimensions.

STATE OF MISSOURI
DAVID JAMES HAGEMEYER
NUMBER PE-2007002788
PROFESSIONAL ENGINEER

THIS SHEET HAS BEEN SIGNED, SEALED AND DATED ELECTRONICALLY.

DATE PREPARED	
10/3/2016	
ROUTE	STATE
I-55	MO
DISTRICT	SHEET NO.
BR	2
COUNTY	
JEFFERSON	
JOB NO.	
J6I3131	
CONTRACT ID.	
PROJECT NO.	
BRIDGE NO.	
A07997	

DATE	DESCRIPTION

IF A SEAL IS PRESENT ON THIS SHEET IT HAS BEEN ELECTRONICALLY SEALED AND DATED.

MISSOURI HIGHWAYS AND TRANSPORTATION COMMISSION
105 WEST CAPITOL
JEFFERSON CITY, MO 65102
1-888-ASK-MODOT (1-888-275-6636)

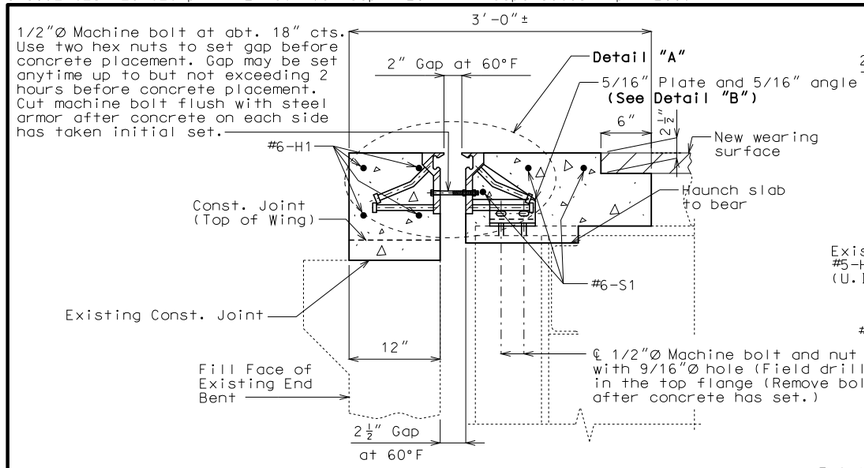

SECTION D-D

Note: Strip seal gland not shown for clarity.

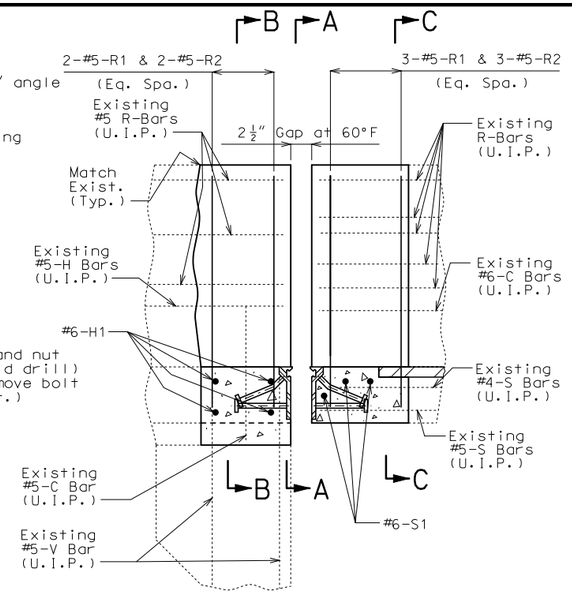

PART ELEVATION OF BARRIER CURB

Notes: Strip seal gland not shown for clarity.

GENERAL NOTES:

Expansion joint system shall be fabricated in one section, except for stage construction and when the length is over 50 feet. A complete joint penetration groove welded splice shall be required. Welds shall be ground flush to provide a smooth surface. The expansion joint system shall be fabricated and installed to the crown and grade of the roadway.

The strip seal gland shall be installed in joints in one continuous piece without field splices. Factory splicing will be permitted for joints in excess of 53 feet.

Structural steel for the expansion joint system shall be ASTM A709 Grade 36 except the steel armor may be ASTM A709 Grade 50W. Anchors for the expansion joint system shall be in accordance with Sec 1037. Strip seal expansion joint system shall be in accordance with Sec 717.

Structural steel for the expansion joint system shall be coated with a minimum of two coats of inorganic zinc primer (5 mils minimum) or galvanized in accordance with ASTM A123. Anchors need not be protected from overspray.

Plan dimensions are based on installation at 60°F. The expansion gap and other dimensions shall be increased or decreased ⅛" for each 10° fall or rise in temperature at installation.

Existing longitudinal reinforcing steel shall be cut/bent so that ends shall not be more than ±1" from vertical leg of the steel armor at the expansion joint system.

Concrete shall be forced under and around steel armor and anchors. Proper consolidation of the concrete shall be achieved by localized internal vibration.

Top of backwall for End Bents No. 1 & 5 shall be formed to the crown and grade of the roadway.

All concrete above the upper construction joint in backwall shall be Class B-2.

Payment for all concrete and reinforcement for curb, parapet and blockout, complete-in-place, will be considered completely covered by the contract unit price for Remove and Replace Curb & Blockout.

All exposed edges of the new curb and blockout shall match existing curb, parapet, blockout and end post.

Bars bonded in old concrete not removed shall be cleanly stripped and fully embedded into new concrete where possible.

Work this sheet with Sheet No. 4.

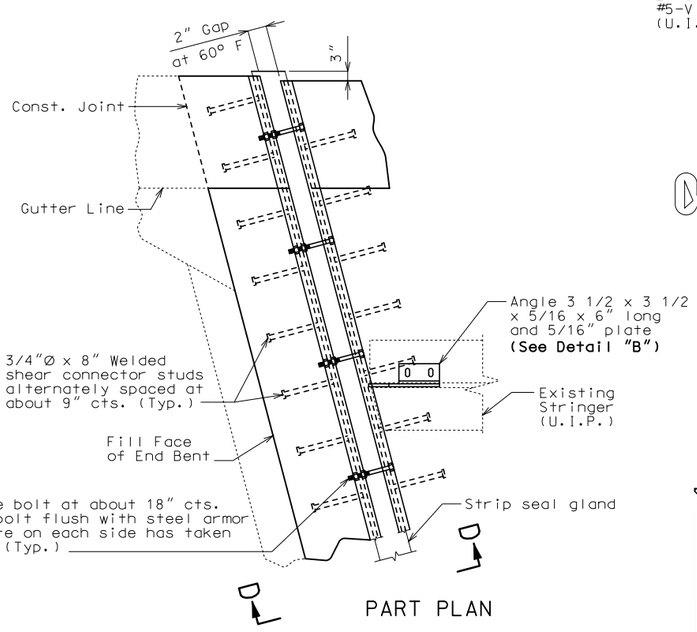

PART PLAN

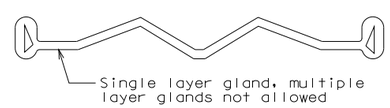

Strip seal gland size = 4"

DETAIL OF GLAND

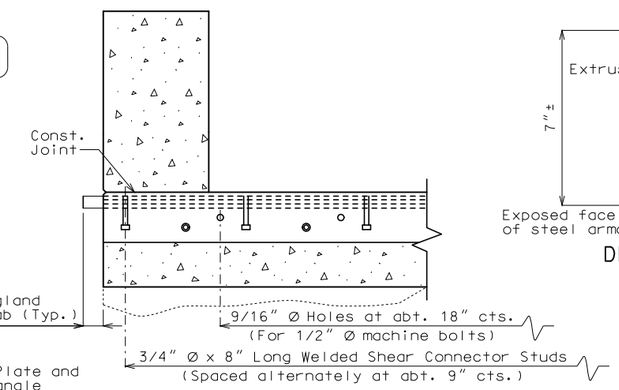

PART SECTION A-A

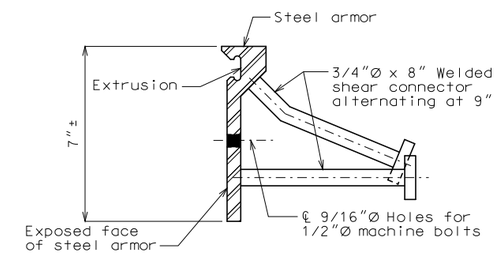

DETAIL OF JOINT ARMOR

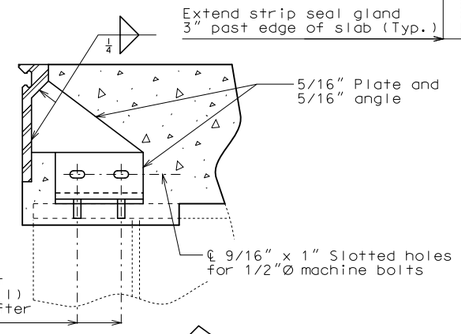

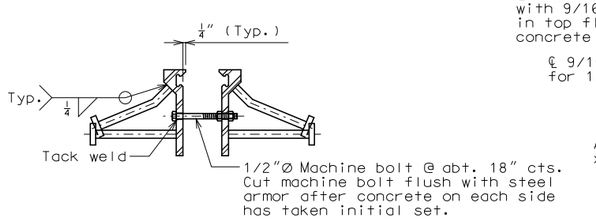

DETAIL "A"

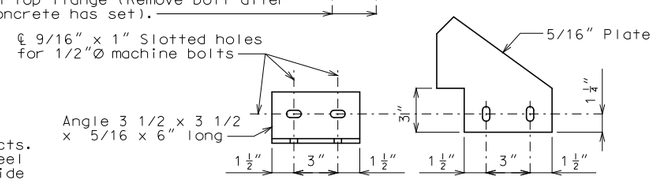

DETAIL "B"

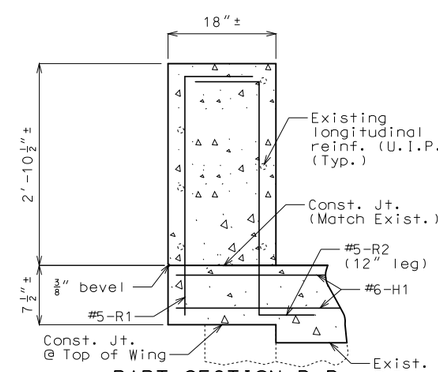

PART SECTION B-B SHOWING REINFORCEMENT

(Strip Seal not shown for clarity)

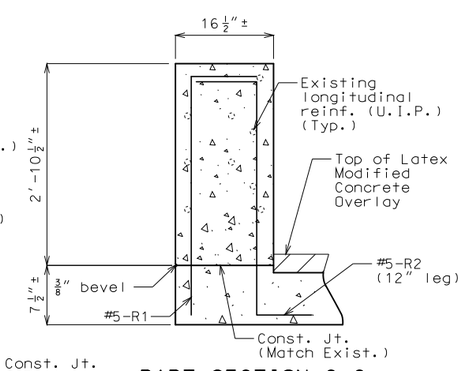

PART SECTION C-C SHOWING REINFORCEMENT

(Strip Seal not shown for clarity)

DETAILS OF STRIP SEAL AT END BENTS NO. 1 & 5

Note: This drawing is not to scale. Follow dimensions.

Sheet No. 3 of 5

Detailed Jul. 2016
Checked Aug. 2016

STATE OF MISSOURI
DAVID JAMES HAGEMEYER
NUMBER PE-2007002788
PROFESSIONAL ENGINEER

THIS SHEET HAS BEEN SIGNED, SEALED AND DATED ELECTRONICALLY.

DATE PREPARED	
10/3/2016	
ROUTE	STATE
I-55	MO
DISTRICT	SHEET NO.
BR	3
COUNTY	
JEFFERSON	
JOB NO.	
J6I3131	
CONTRACT ID.	
PROJECT NO.	
BRIDGE NO.	
A07997	

DATE	DESCRIPTION

IF A SEAL IS PRESENT ON THIS SHEET IT HAS BEEN ELECTRONICALLY SEALED AND DATED.

MISSOURI HIGHWAYS AND TRANSPORTATION COMMISSION
105 WEST CAPITOL
JEFFERSON CITY, MO 65102
1-888-ASK-MODOT (1-888-275-6636)

Notes:

The #6-H1 & #6-S1 bars to be segmented to accommodate stage construction. The total bar length for #6-H1 & #6-S1 bars shown in Bill of Reinforcing Steel allows for two lap splices with a length of 3'-6" each. Actual bar segment lengths to be determined by contractor. The contractor may use a mechanical bar splice in lieu of a lap splice. When a mechanical bar splice is used, the actual bar segment length will be determined by the contractor to accommodate manufacturer's recommendations for installation and stage construction. The cost of furnishing and installing the bar splices will be considered completely covered by the contract unit price for Reinforcing Steel. No adjustment of the quantity of reinforcing steel will be allowed for the use of mechanical bar splices.

If existing rail post attachment is within length of curb, parapet and blockout being removed and replaced, then rail post shall be reattached to new parapet. Contractor may clean and reuse existing anchor bolts as approved by the engineer or replace the anchor bolts with like kind. Cost of rail post attachment will be considered completely covered by the contract unit price for Remove and Replace Curb & Blockout.

Cost of removing existing expansion joint, backwall and slab concrete within the limits shown will be considered completely covered by the contract unit price for Removal of Existing Expansion Joint & Adjacent Concrete.

For location of slab construction joint, see Roadway Plans for traffic control.

For details of strip seal expansion joint system at End Bents No. 1 & 5, see Sheet No. 3.

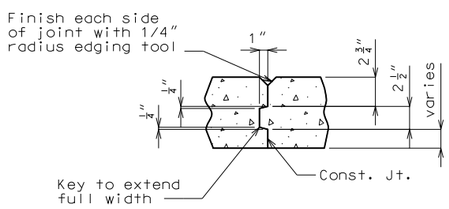

SLAB CONSTRUCTION JOINT DETAIL

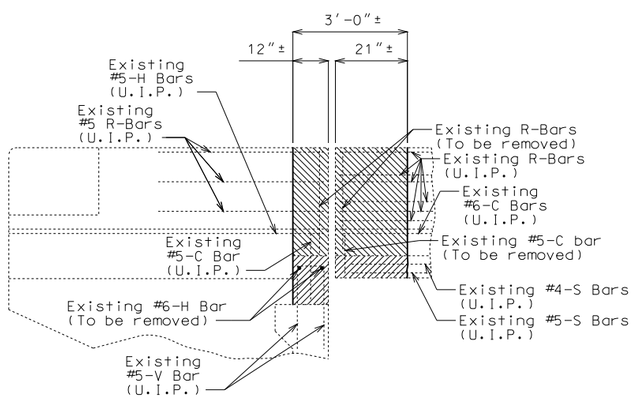

SECTION THRU SLAB AT END BENTS NO. 1 & 5
SHOWING LIMITS OF CONCRETE REMOVAL

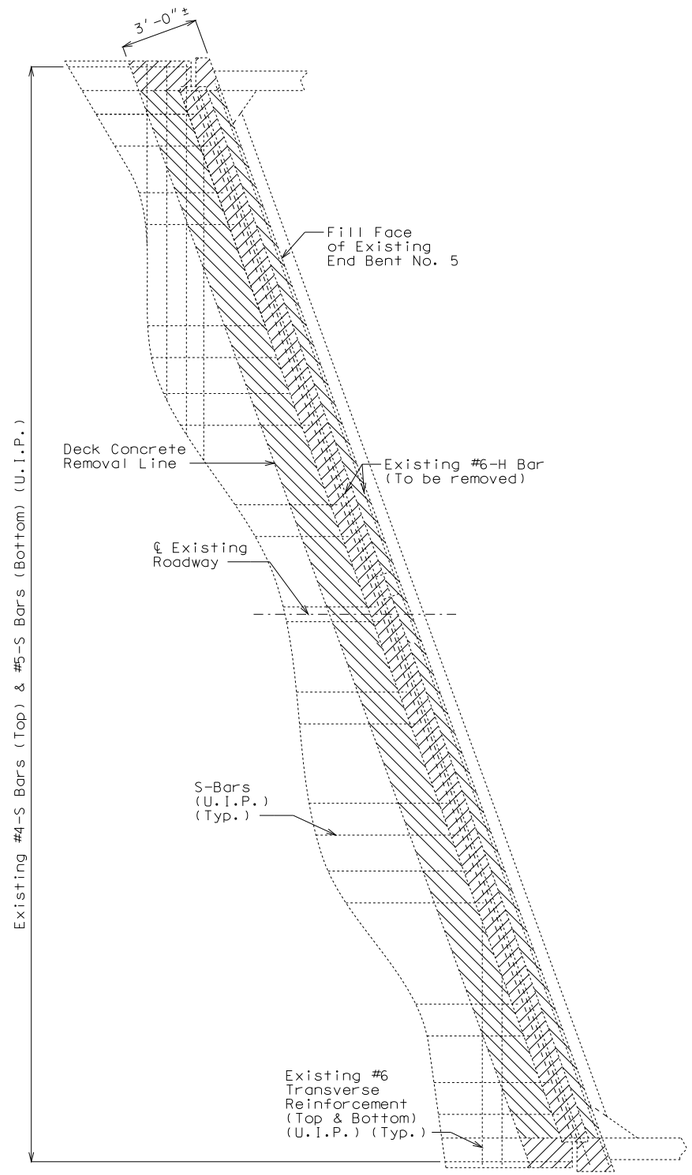

PLAN OF SLAB AT END BENT NO. 5
SHOWING LIMITS OF CONCRETE REMOVAL

(End Bent No. 1 similar by 180° rotation.)

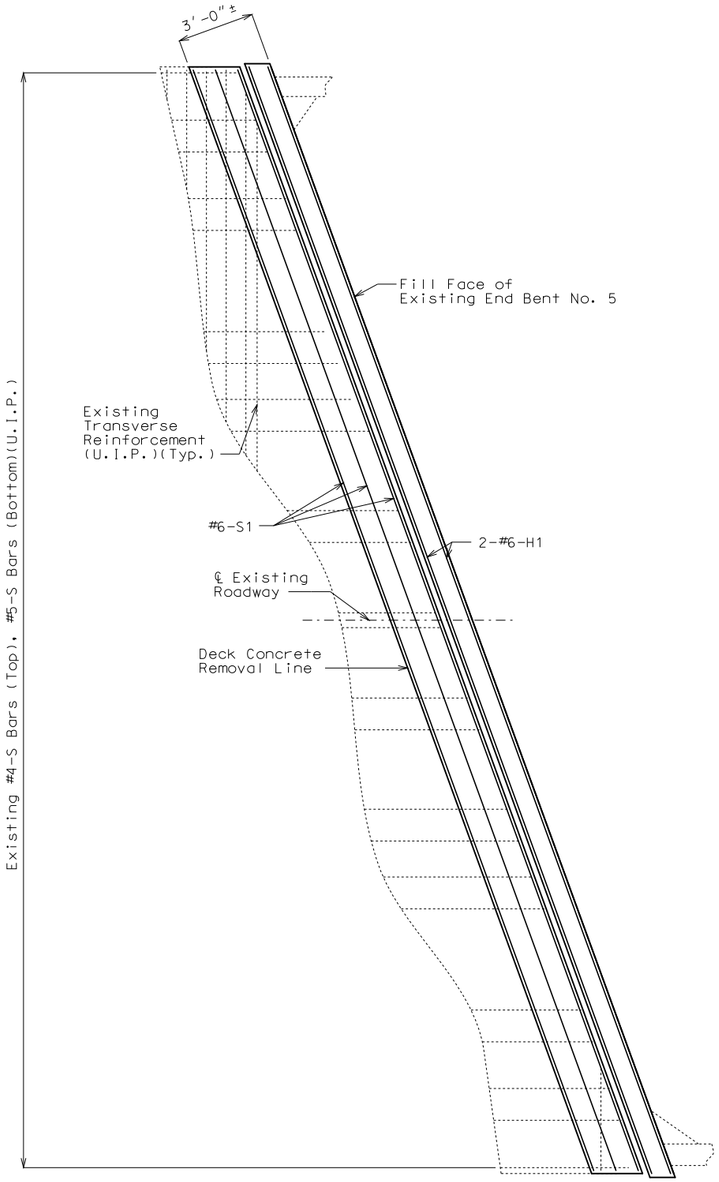

PART PLAN OF SLAB AT END BENT NO. 5
SHOWING NEW CONCRETE AND REINFORCEMENT

(End Bent No. 1 similar by 180° rotation.)

EXPANSION DEVICE REPLACEMENT AT END BENTS

Detailed Jul. 2016
Checked Aug. 2016

Note: This drawing is not to scale. Follow dimensions.

STATE OF MISSOURI
DAVID JAMES HAGEMEYER
NUMBER PE-2007002788
PROFESSIONAL ENGINEER

THIS SHEET HAS BEEN SIGNED, SEALED AND DATED ELECTRONICALLY.

DATE PREPARED	10/3/2016
ROUTE	I-55
STATE	MO
DISTRICT	BR
SHEET NO.	4
COUNTY	JEFFERSON
JOB NO.	J6I3131
CONTRACT ID.	
PROJECT NO.	
BRIDGE NO.	A07997

DATE	DESCRIPTION

MISSOURI HIGHWAYS AND TRANSPORTATION COMMISSION
105 WEST CAPITOL
JEFFERSON CITY, MO 65102
1-888-ASK-MODOT (1-888-275-6636)

IF A SEAL IS PRESENT ON THIS SHEET IT HAS BEEN ELECTRONICALLY SEALED AND DATED.

BILL OF REINFORCING STEEL

NO. REQ'D.	MARK NO. SIZE	MARK NO. MARK	LOCATION	EPOXY (E)	SHAPE NO.	STIRRUP (S)	SUBSTR. (X)	VARIES (V)	NO. EACH	B FT. IN.	C FT. IN.	D FT. IN.	E FT. IN.	F FT. IN.	H FT. IN.	K FT. IN.	NOMINAL LENGTH FT. IN.	ACTUAL LENGTH FT. IN.	WEIGHT LBS.
			SLAB																
8	6	H1	BACKWALL	E	20					44 0.000							44 0	44 0	529
6	6	S1	SLAB	E	20					43 9.000							43 9	43 9	394
			CURB																
20	5	R1	CURB	E	19	S				3 3.000	13.500						4 5	4 3	89
20	5	R2	CURB	E	28	S					13.500	3 3.000	12.000				5 5	5 2	108
			TOTALS																
	5			E															197
	6			E															923
			TOTAL																0
			TOTAL	E															1120
			Slab on Girder																
	5			E															197
	6			E															923
			TOTAL																1120

BILL OF REINFORCING STEEL

NO. REQ'D.	MARK NO. SIZE	MARK NO. MARK	LOCATION	EPOXY (E)	SHAPE NO.	STIRRUP (S)	SUBSTR. (X)	VARIES (V)	NO. EACH	B FT. IN.	C FT. IN.	D FT. IN.	E FT. IN.	F FT. IN.	H FT. IN.	K FT. IN.	NOMINAL LENGTH FT. IN.	ACTUAL LENGTH FT. IN.	WEIGHT LBS.

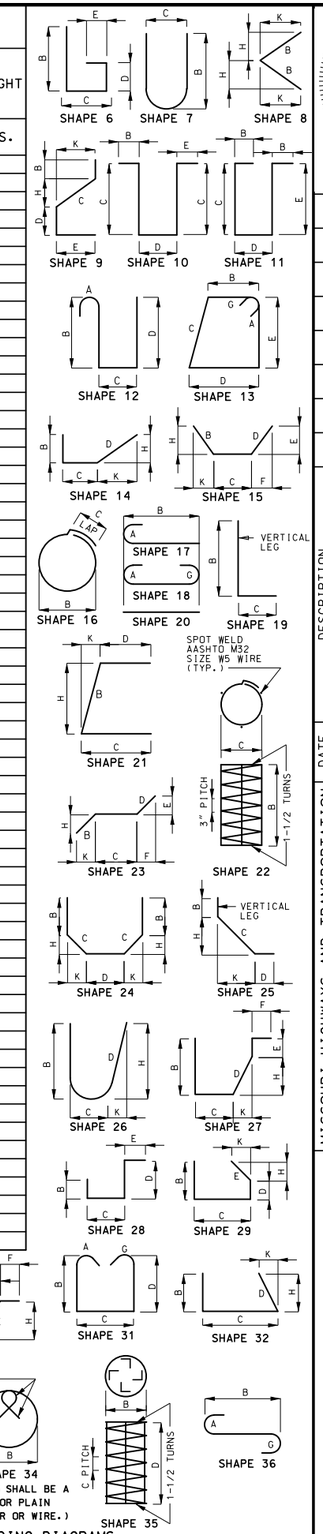

BENDING DIAGRAMS

STATE OF MISSOURI
DAVID JAMES HAGEMEYER
NUMBER PE-2007002788
PROFESSIONAL ENGINEER

THIS SHEET HAS BEEN SIGNED, SEALED AND DATED ELECTRONICALLY.

DATE PREPARED 10/3/2016

ROUTE	STATE
I-55	MO
DISTRICT	SHEET NO.
BR	5

COUNTY: JEFFERSON

JOB NO. J6I3131

CONTRACT ID.

PROJECT NO.

BRIDGE NO. A07997

DESCRIPTION	DATE

IF A SEAL IS PRESENT ON THIS SHEET IT HAS BEEN ELECTRONICALLY SEALED AND DATED.

MISSOURI HIGHWAYS AND TRANSPORTATION COMMISSION

105 WEST CAPITOL
JEFFERSON CITY, MO 65102
1-888-ASK-MODOT (1-888-275-6636)

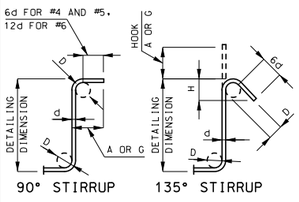

STIRRUP HOOK DIMENSIONS

GRADES 40 - 50 - 60 KSI

BAR SIZE	D (IN.)	90° HOOK: HOOK A OR G	135° HOOK: HOOK A OR G	135° HOOK: APPROX. H
#4	2"	4 1/2"	4 1/2"	3"
#5	2 1/2"	6"	5 1/2"	3 3/4"
#6	4 1/2"	12"	8"	4 1/2"

NOTE: UNLESS OTHERWISE NOTED, DIAMETER "D" IS THE SAME FOR ALL BENDS AND HOOKS ON A BAR.

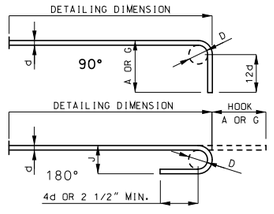

END HOOK DIMENSIONS

BAR SIZE	D (IN.)	ALL GRADES: 180° HOOKS A OR G	180° HOOKS J	90° HOOKS A OR G
#3	2 1/4"	5"	3"	6"
#4	3"	6"	4"	8"
#5	3 3/4"	7"	5"	10"
#6	4 1/2"	8"	6"	12"
#7	5 1/4"	10"	7"	14"
#8	6"	11"	8"	16"
#9	9 1/2"	15"	11 3/4"	19"
#10	10 3/4"	17"	13 1/4"	22"
#11	12"	19"	14 3/4"	2'-0"
#14	18 1/4"	2'-3"	21 3/4"	2'-7"

NOTE:
ALL STANDARD HOOKS AND BENDS OTHER THAN 180 DEGREE ARE TO BE BENT WITH SAME PROCEDURE AS FOR 90 DEGREE STANDARD HOOKS.
HOOKS AND BENDS SHALL BE IN ACCORDANCE WITH THE PROCEDURES AS SHOWN ON THIS SHEET.
E = EPOXY COATED REINFORCEMENT.
S = STIRRUP.
X = BAR IS INCLUDED IN SUBSTRUCTURE QUANTITIES.
V = BAR DIMENSIONS VARY IN EQUAL INCREMENTS BETWEEN DIMENSIONS SHOWN ON THIS LINE AND THE FOLLOWING LINE.
NO. EA. = NUMBER OF BARS OF EACH LENGTH.
NOMINAL LENGTHS ARE BASED ON OUT TO OUT DIMENSIONS SHOWN IN BENDING DIAGRAMS AND ARE LISTED FOR FABRICATORS USE. (NEAREST INCH)
ACTUAL LENGTHS ARE MEASURED ALONG CENTERLINE BAR TO THE NEAREST INCH.
PAYWEIGHTS ARE BASED ON ACTUAL LENGTHS.
FOUR ANGLE OR CHANNEL SPACERS ARE REQUIRED FOR EACH COLUMN SPIRAL. SPACERS ARE TO BE PLACED ON INSIDE OF SPIRALS. LENGTH AND WEIGHT OF COLUMN SPIRALS DO NOT INCLUDE SPLICES OR SPACERS.
REINFORCING STEEL (GRADE 60) FY = 60,000 PSI.

Detailed Aug. 2016
Checked Aug. 2016

Note: This drawing is not to scale. Follow dimensions.

SEC/SUR 1906 TWP 40N RGE 6E

U.I.P. AND REHAB EXISTING (48'-55'-55'-38') CONTINUOUS COMPOSITE WIDE FLANGE BEAM SPANS (5° 49' 00" RA)

General Notes:

Design Specifications:
2002 AASHTO LFD (17th Ed.) Standard Specifications
Load Factor Design
Bridge Deck Rating = 6

Design Loading:
HS20-44 and Modified 24,000 lb Tandem Axle
(1961 & New Construction)

Design Unit Stresses:
Class B-1 Concrete (Curb and Parapet) f'c = 4,000 psi
Class B-2 Concrete (Slab) f'c = 4,000 psi
Reinforcing Steel (Grade 60) fy = 60,000 psi

Miscellaneous:
In order to maintain grade and a minimum thickness of overlay as shown on plans it may be necessary to use additional quantities of overlay at various locations throughout the structure. The cost of furnishing and installing the overlay will be considered completely covered in the contract unit price, including all additional labor, materials or equipment for variations in thickness of overlay.

Roadway surfacing adjacent to bridge overlay ends shall match bridge overlay (Roadway Item).

Outline of old work is indicated by light dashed lines. Heavy lines indicate new work.

Contractor shall verify all dimensions in field before ordering new material.

Contractor shall remove all asphalt overlay to existing concrete substrate.

Traffic Handling:
Traffic to be maintained on structure during construction. See Roadway Plans for traffic control and staged construction details.

Structural Steel Protective Coating:
Protective Coating: System G in accordance with Sec 1081.

Coating Limits: All existing structural steel within 10 feet of ends of stringers at End Bents No. 1 & 5. Within these limits, items to be recoated shall include stringers, diaphragms, stiffeners, bearings and miscellaneous structural steel items.

Surface Preparation: Surface preparation of the existing steel shall be in accordance with Sec 1081 for "Recoating of Structural Steel (System G, H or I)". The cost of surface preparation will be considered completely covered by the contract unit price per sq. foot for "Surface Preparation for Recoating Structural Steel".

Prime Coat: The cost of the prime coat on existing structural steel will be considered completely covered by the contract unit price per sq. foot for "Field Application of Inorganic Zinc Primer". Tint of the prime coat for System G shall be similar to the color of the field coat to be used.

Field Coat: The color of the finish field coat shall be Gray (Federal Standard #26373). The cost of the intermediate field coat will be considered completely covered by the contract unit price per sq. foot for "Intermediate Field Coat (System G)". The cost of the finish field coat will be considered completely covered by the contract unit price per sq. foot for "Finish Field Coat (System G)".

Sec 1081.4.5 shall be modified such that the word "RECOATED" is replaced by the word "RECOATED - SYSTEM G - EXPANSION AREAS ONLY".

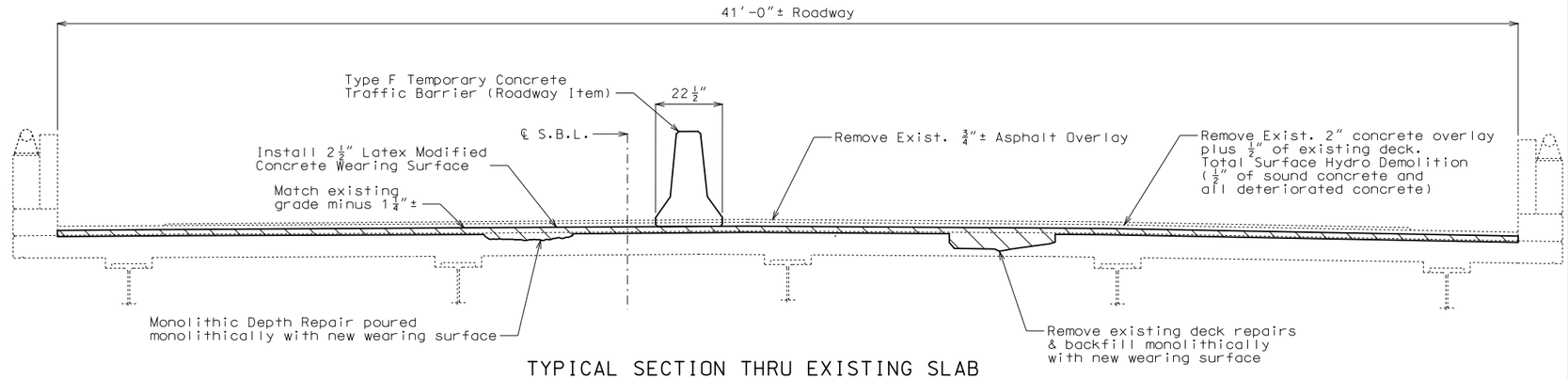

TYPICAL SECTION THRU EXISTING SLAB

Estimated Quantities

Item		Total
Removal of Asphalt Wearing Surface	sq. foot	7183
Removal of Concrete Wearing Surface	sq. foot	8180
Removal of Existing Expansion Joint & Adjacent Concrete	linear foot	82
Remove and Replace Curb & Blockout	linear foot	12
Removal of Existing Deck Repairs	sq. foot	1100
Latex Modified High Early Strength Concrete Wearing Surface	sq. yard	909
Class B-2 Concrete	cu. yard	8.2
Total Surface Hydro Demolition	sq. yard	909
Clean and Epoxy Seal	sq. foot	380
Plugging Curb Outlet	each	18
✳ Monolithic Deck Repair	cu. yard	6.3
Protective Coating - Concrete Bents and Piers (Epoxy)	lump sum	1
Surface Preparation for Recoating Structural Steel	sq. foot	800
Field Application of Inorganic Zinc Primer	sq. foot	800
Intermediate Field Coat System (System G)	sq. foot	800
Finish Field Coat (System G)	sq. foot	800
Cored Slab Drain	each	14
Strip Seal Expansion Joint System	linear foot	82
Reinforcing Steel (Epoxy Coated)	pound	920

✳ Monolithic Deck Repairs will be made at a fixed unit price (See Job Special Provisions).

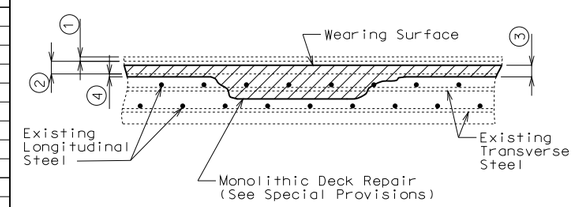

MONOLITHIC DECK REPAIR

1. Remove existing 3/4" asphalt overlay.
2. Remove existing 2" concrete overlay plus 1/2" of original deck.
3. 2 1/2" (Min.) Latex Modified Concrete Wearing Surface
4. Total surface hydro demolition of existing deck (1/2" min. of sound concrete and all deteriorated concrete).

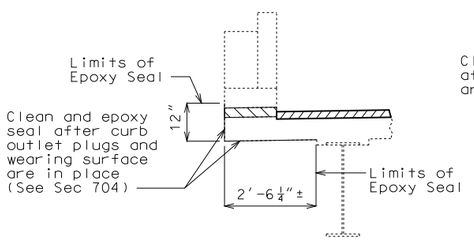

SECTION THRU EDGE OF SLAB SHOWING CLEAN AND EPOXY SEAL

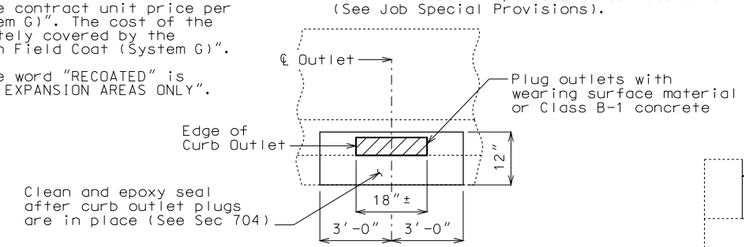

PART ELEVATION SHOWING EXISTING CURB OUTLETS TO BE PLUGGED & SHOWING LIMITS OF EPOXY SEAL

Notes:

Cost of labor and materials required to plug existing curb outlets will be considered completely covered by the contract unit price for Plugging Curb Outlet.

Estimated material required to fill all curb outlets is 0.5 cubic yards.

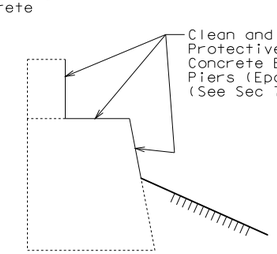

TYPICAL SECTION THRU END BENTS NO.1 & 5 SHOWING PROTECTIVE COATING

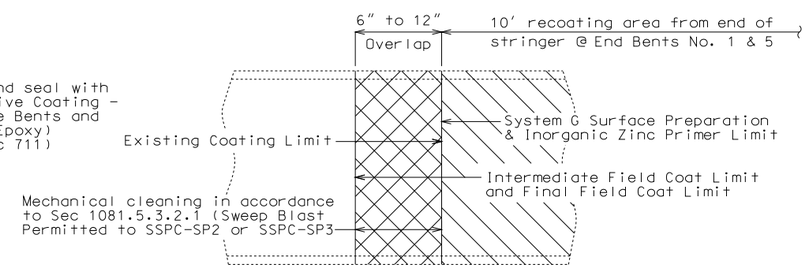

PART ELEVATION SHOWING LIMITS OF PAINT OVERLAP NEAR BENTS NO. 1 & 5

Note:
All reinforcing steel in slab that is loose and exposed shall be removed as directed by the engineer. Removal of reinforcing steel and loose concrete will be considered completely covered by the contract unit price for Clean and Epoxy Seal.

Detailed Jul. 2016
Checked Aug. 2016

Note: This drawing is not to scale. Follow dimensions.

Sheet No. 1 of 5

REPAIRS TO BRIDGE: I-55 SB OVER ROUTE 67

ROUTE I-55 S.B. FROM ROUTE 61 TO ROUTE A

ABOUT 1.2 MILES S. OF ROUTE A

STA. 954+04.88± (Match Existing)

STD. 617.20
STD. 706.35

STATE OF MISSOURI
DAVID JAMES HAGEMEYER
NUMBER PE-2007002788
PROFESSIONAL ENGINEER
THIS SHEET HAS BEEN SIGNED, SEALED AND DATED ELECTRONICALLY.

DATE PREPARED 10/28/2016
ROUTE I-55 | STATE MO
DISTRICT BR | SHEET NO. 1
COUNTY JEFFERSON
JOB NO. J6I3131
CONTRACT ID.
PROJECT NO.
BRIDGE NO. A07998

DATE	DESCRIPTION

MISSOURI HIGHWAYS AND TRANSPORTATION COMMISSION
105 WEST CAPITOL
JEFFERSON CITY, MO 65102
1-888-ASK-MODOT (1-888-275-6636)

IF A SEAL IS PRESENT ON THIS SHEET IT HAS BEEN ELECTRONICALLY SEALED AND DATED.

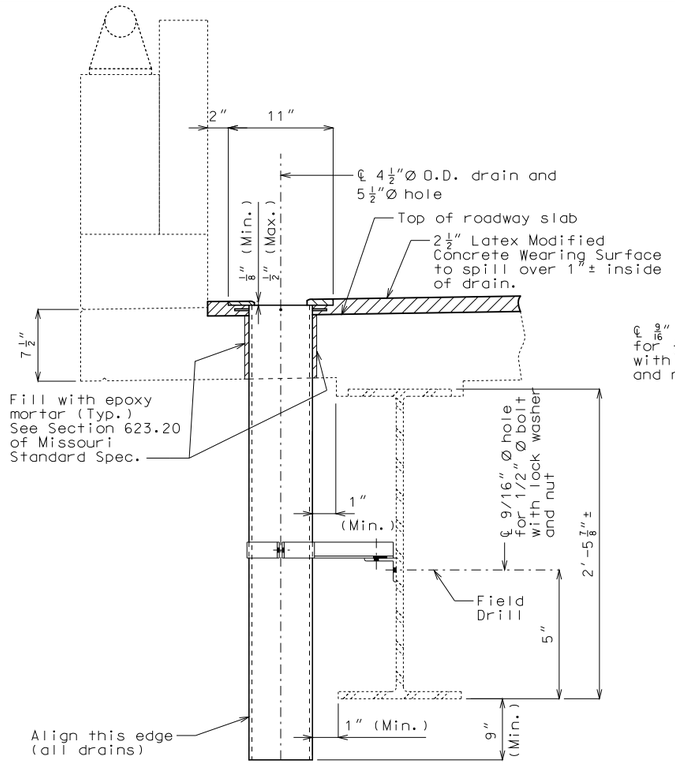

PART SECTION NEAR DRAIN

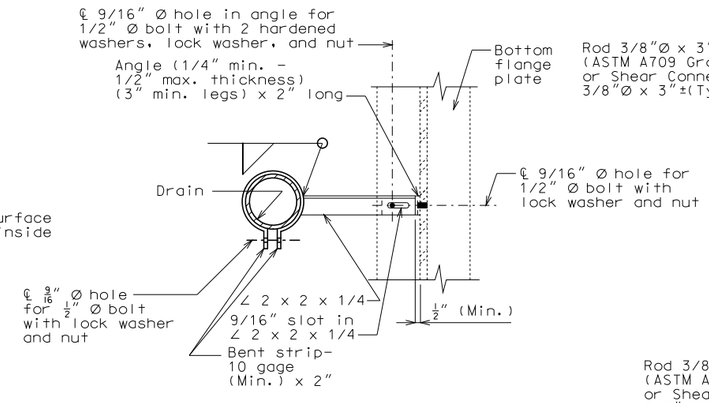

PART SECTION SHOWING BRACKET ASSEMBLY

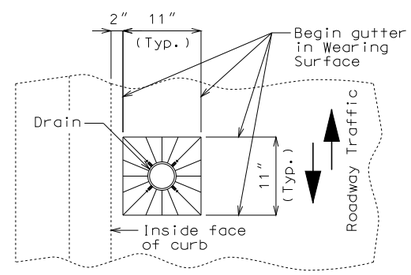

PART PLAN OF SLAB AT DRAIN

SLAB DRAIN DETAILS

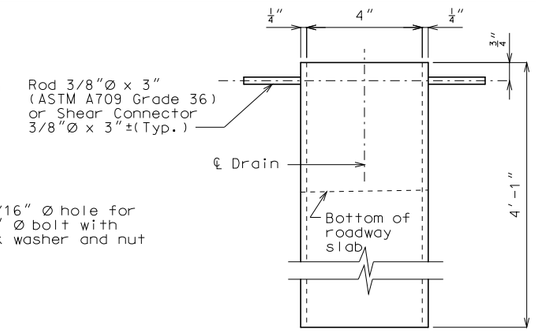

ELEVATION OF DRAIN

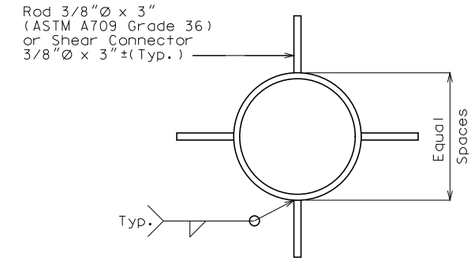

PLAN OF DRAIN

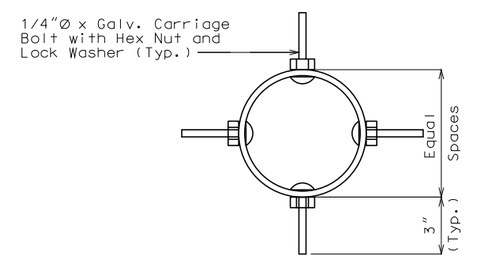

PLAN OF OPTIONAL FRP DRAIN

General Notes:

Contractor shall have the option to construct either steel or Fiberglass Reinforced Polymer (FRP) slab drains. All drains shall be of same type.

Slab drain bracket assembly shall be ASTM A709 Grade 36 steel.

The bracket assembly shall be galvanized in accordance with ASTM A123.

All bolts, hardened washers, lock washers and nuts shall be galvanized in accordance with ASTM A153.

Shop drawings will not be required for the slab drains and the bracket assembly.

Cost of cored slab drains, complete in place, will be considered completely covered by the contract unit price for Cored Slab Drain.

Holes for slab drains shall be cored. Percussion drilling will not be permitted.

Slab drain locations may be shifted the minimum extent necessary to avoid slab reinforcement and to allow for field drilling bolt hole in web of existing stringer or girder to avoid diaphragm connections and splices for bracket assembly attachment.

For details of plugging existing curb outlets, see Sheet No. 1.

Notes for Steel Drain:

Slab drains may be fabricated from 1/4" structural steel pipe ASTM A500 or A501.

The drains shall be galvanized in accordance with ASTM A123.

Drains shall be inserted through slab such that damage to galvanized coating is minimized.

Notes for Optional FRP Drain:

Drains shall be machine filament-wound thermosetting resin pipe meeting the requirements of ASTM D2996 with the following exceptions:

Minimum reinforced wall thickness shall be 1/4 inch.

The resin used shall be ultraviolet (UV) resistant and/or have UV inhibitors mixed throughout. Drains may have an exterior coating for additional UV resistance. Care shall be taken to avoid damage to exterior coating during installation.

The color of the slab drain shall be Gray (Federal Standard #26373). The color shall be uniform throughout the resin and any coating used.

The combination of materials used in the manufacture of the drains shall be tested for UV resistance in accordance with ASTM D4329 Cycle A. The representative material shall withstand at least 500 hours of testing with only minor discoloration and without any physical deterioration. The contractor shall furnish the results of the required ultraviolet testing prior to acceptance of the slab drains.

At the contractor's option, drains may be field cut. The method of cutting FRP slab drain shall be as recommended by the manufacturer to ensure a smooth, chip free cut.

No additional payment will be made for this substitution.

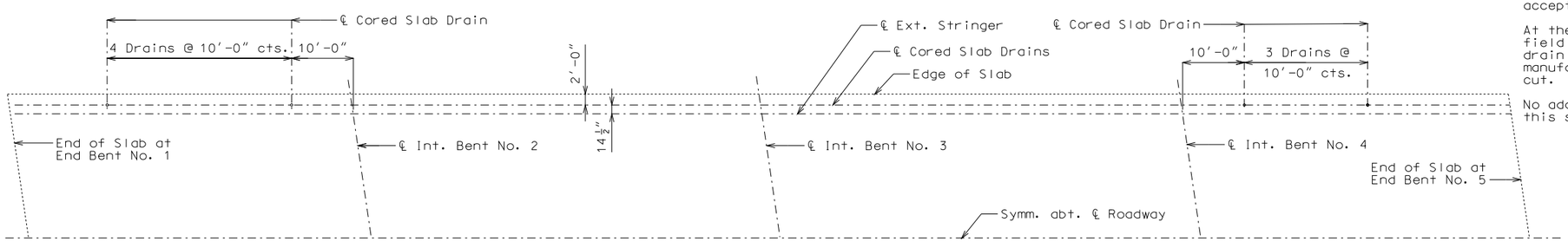

PLAN OF SLAB SHOWING LOCATION OF CORED SLAB DRAINS

Detailed Jul. 2016
Checked Aug. 2016

Note: This drawing is not to scale. Follow dimensions.

STATE OF MISSOURI
DAVID JAMES HAGEMEYER
NUMBER PE-2007002788
PROFESSIONAL ENGINEER
THIS SHEET HAS BEEN SIGNED, SEALED AND DATED ELECTRONICALLY.

DATE PREPARED	
10/3/2016	
ROUTE	STATE
I-55	MO
DISTRICT	SHEET NO.
BR	2
COUNTY	
JEFFERSON	
JOB NO.	
J6I3131	
CONTRACT ID.	
PROJECT NO.	
BRIDGE NO.	
A07998	

DATE	DESCRIPTION

IF A SEAL IS PRESENT ON THIS SHEET IT HAS BEEN ELECTRONICALLY SEALED AND DATED.

MISSOURI HIGHWAYS AND TRANSPORTATION COMMISSION
105 WEST CAPITOL
JEFFERSON CITY, MO 65102
1-888-ASK-MODOT (1-888-275-6636)

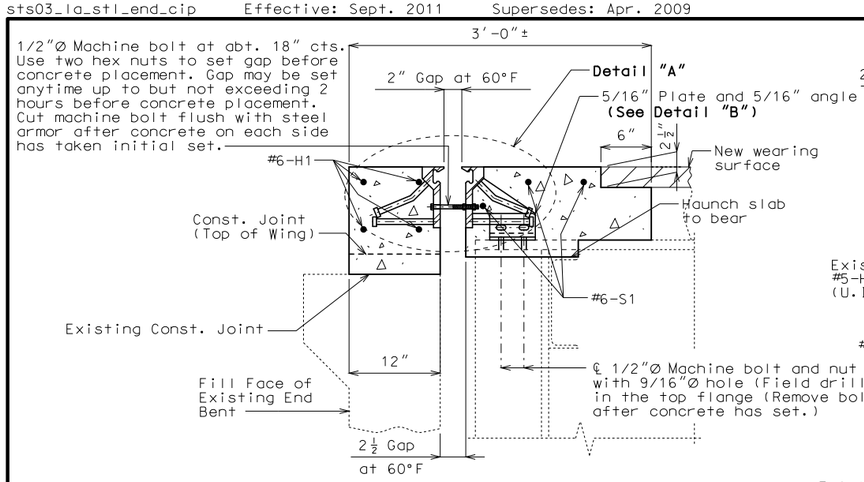

SECTION D-D

Note: Strip seal gland not shown for clarity.

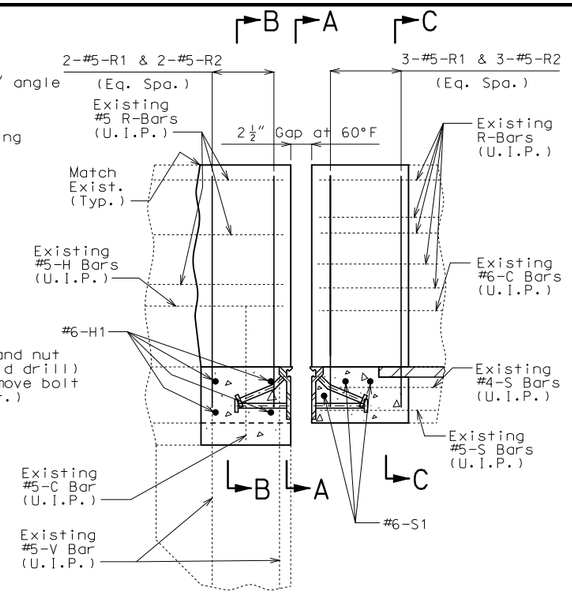

PART ELEVATION OF BARRIER CURB

Notes: Strip seal gland not shown for clarity.

GENERAL NOTES:

Expansion joint system shall be fabricated in one section, except for stage construction and when the length is over 50 feet. A complete joint penetration groove welded splice shall be required. Welds shall be ground flush to provide a smooth surface. The expansion joint system shall be fabricated and installed to the crown and grade of the roadway.

The strip seal gland shall be installed in joints in one continuous piece without field splices. Factory splicing will be permitted for joints in excess of 53 feet.

Structural steel for the expansion joint system shall be ASTM A709 Grade 36 except the steel armor may be ASTM A709 Grade 50W. Anchors for the expansion joint system shall be in accordance with Sec 1037. Strip seal expansion joint system shall be in accordance with Sec 717.

Structural steel for the expansion joint system shall be coated with a minimum of two coats of inorganic zinc primer (5 mils minimum) or galvanized in accordance with ASTM A123. Anchors need not be protected from overspray.

Plan dimensions are based on installation at 60°F. The expansion gap and other dimensions shall be increased or decreased ⅛" for each 10° fall or rise in temperature at installation.

Existing longitudinal reinforcing steel shall be cut/bent so that ends shall not be more than ±1" from vertical leg of the steel armor at the expansion joint system.

Concrete shall be forced under and around steel armor and anchors. Proper consolidation of the concrete shall be achieved by localized internal vibration.

Top of backwall for End Bents No. 1 & 5 shall be formed to the crown and grade of the roadway.

All concrete above the upper construction joint in backwall shall be Class B-2.

Payment for all concrete and reinforcement for curb, parapet and blockout, complete-in-place, will be considered completely covered by the contract unit price for Remove and Replace Curb & Blockout.

All exposed edges of the new curb and blockout shall match existing curb, parapet, blockout and end post.

Bars bonded in old concrete not removed shall be cleanly stripped and fully embedded into new concrete where possible.

Work this sheet with Sheet No. 4.

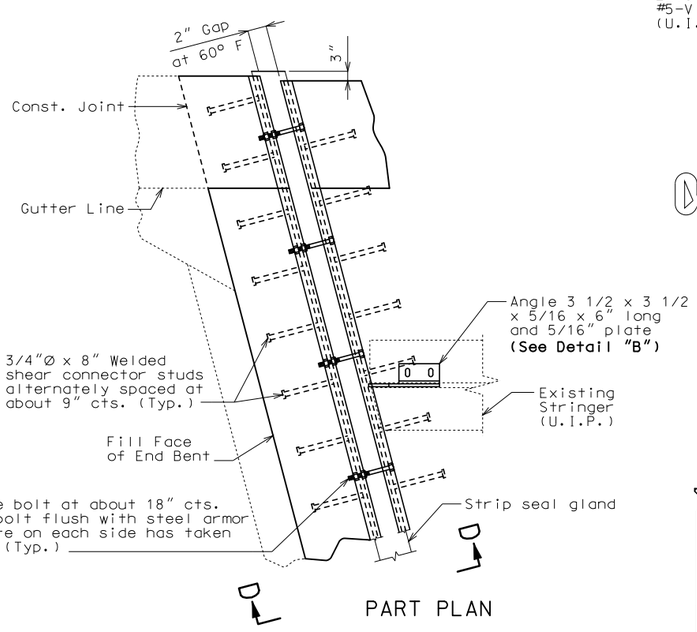

PART PLAN

Strip seal gland size = 4"

DETAIL OF GLAND

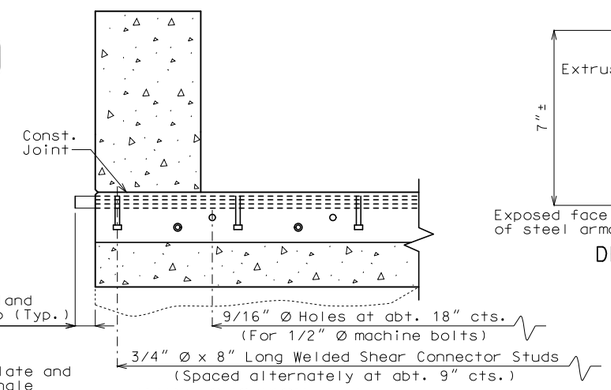

PART SECTION A-A

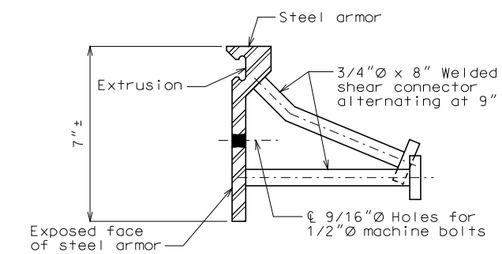

DETAIL OF JOINT ARMOR

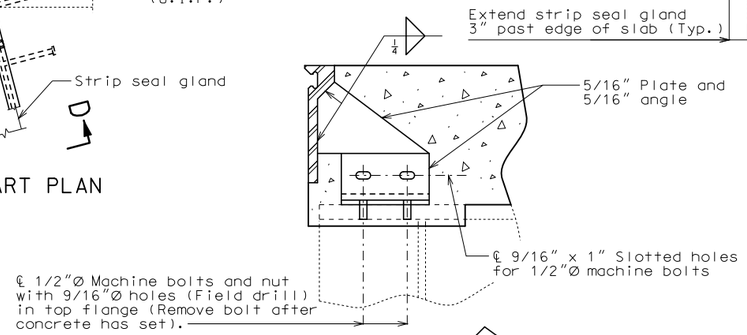

DETAIL "B"

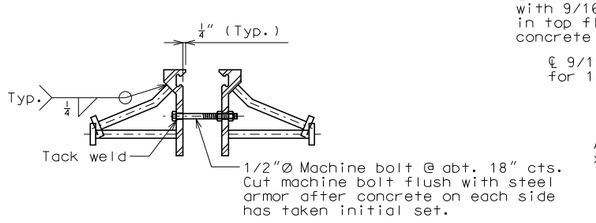

DETAIL "A"

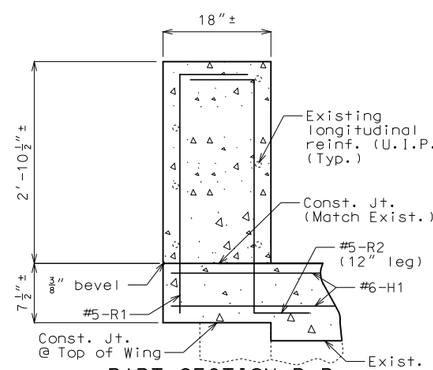

PART SECTION B-B SHOWING REINFORCEMENT

(Strip Seal not shown for clarity)

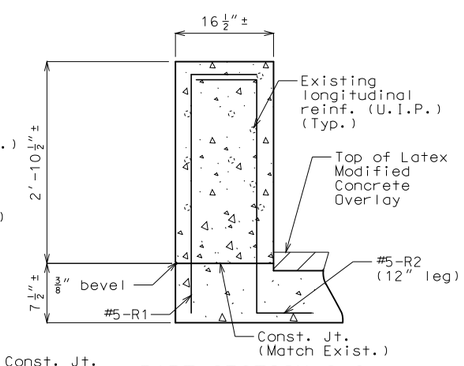

PART SECTION C-C SHOWING REINFORCEMENT

(Strip Seal not shown for clarity)

DETAILS OF STRIP SEAL AT END BENTS NO. 1 & 5

Note: This drawing is not to scale. Follow dimensions.

Sheet No. 3 of 5

Detailed Jul. 2016
Checked Aug. 2016

STATE OF MISSOURI
DAVID JAMES HAGEMEYER
NUMBER PE-2007002788
PROFESSIONAL ENGINEER
THIS SHEET HAS BEEN SIGNED, SEALED AND DATED ELECTRONICALLY.

DATE PREPARED	
10/3/2016	
ROUTE	STATE
I-55	MO
DISTRICT	SHEET NO.
BR	3
COUNTY	
JEFFERSON	
JOB NO.	
J6I3131	
CONTRACT ID.	
PROJECT NO.	
BRIDGE NO.	
A07998	

DATE	DESCRIPTION

IF A SEAL IS PRESENT ON THIS SHEET IT HAS BEEN ELECTRONICALLY SEALED AND DATED.

MISSOURI HIGHWAYS AND TRANSPORTATION COMMISSION
105 WEST CAPITOL
JEFFERSON CITY, MO 65102
1-888-ASK-MODOT (1-888-275-6636)

Notes:

The #6-H1 & #6-S1 bars to be segmented to accommodate stage construction. The total bar length for #6-H1 & #6-S1 bars shown in Bill of Reinforcing Steel allows for two lap splices with a length of 3'-6" each. Actual bar segment lengths to be determined by contractor. The contractor may use a mechanical bar splice in lieu of a lap splice. When a mechanical bar splice is used, the actual bar segment length will be determined by the contractor to accommodate manufacturer's recommendations for installation and stage construction. The cost of furnishing and installing the bar splices will be considered completely covered by the contract unit price for Reinforcing Steel. No adjustment of the quantity of reinforcing steel will be allowed for the use of mechanical bar splices.

If existing rail post attachment is within length of curb, parapet and blockout being removed and replaced, then rail post shall be reattached to new parapet. Contractor may clean and reuse existing anchor bolts as approved by the engineer or replace the anchor bolts with like kind. Cost of rail post attachment will be considered completely covered by the contract unit price for Remove and Replace Curb & Blockout.

Cost of removing existing expansion joint, backwall and slab concrete within the limits shown will be considered completely covered by the contract unit price for Removal of Existing Expansion Joint & Adjacent Concrete.

For location of slab construction joint, see Roadway Plans for traffic control.

For details of strip seal expansion joint system at End Bents No. 1 & 5, see Sheet No. 3.

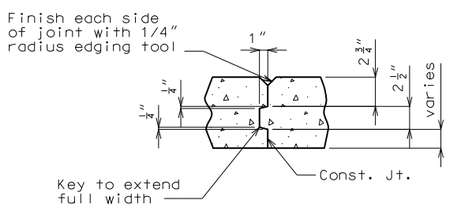

SLAB CONSTRUCTION JOINT DETAIL

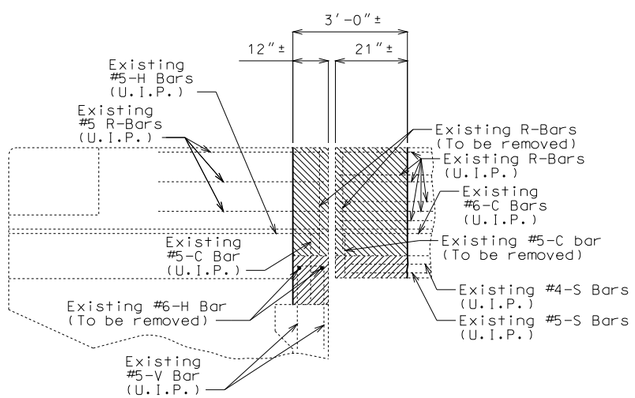

SECTION THRU SLAB AT END BENTS NO. 1 & 5
SHOWING LIMITS OF CONCRETE REMOVAL

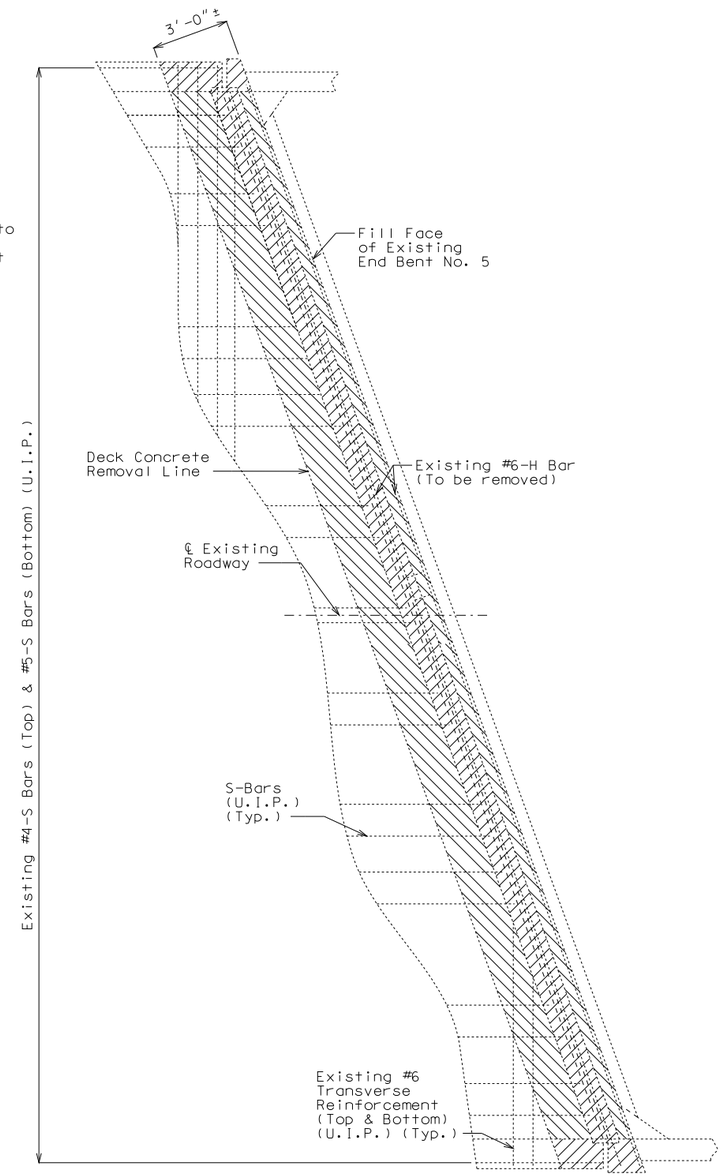

PLAN OF SLAB AT END BENT NO. 5
SHOWING LIMITS OF CONCRETE REMOVAL

(End Bent No. 1 similar by 180° rotation.)

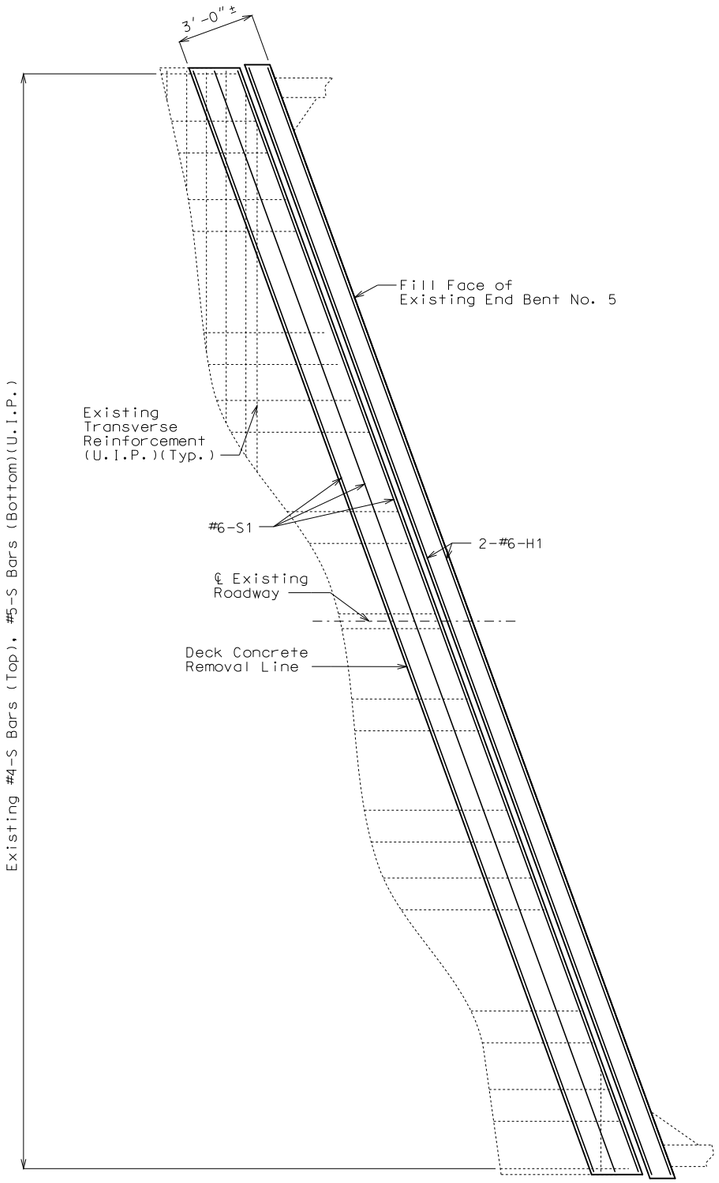

PART PLAN OF SLAB AT END BENT NO. 5
SHOWING NEW CONCRETE AND REINFORCEMENT

(End Bent No. 1 similar by 180° rotation.)

EXPANSION DEVICE REPLACEMENT AT END BENTS

Detailed Jul. 2016
Checked Aug. 2016

Note: This drawing is not to scale. Follow dimensions.

STATE OF MISSOURI
DAVID JAMES HAGEMEYER
NUMBER PE-2007002788
PROFESSIONAL ENGINEER

THIS SHEET HAS BEEN SIGNED, SEALED AND DATED ELECTRONICALLY.

DATE PREPARED	10/3/2016
ROUTE	I-55
STATE	MO
DISTRICT	BR
SHEET NO.	4
COUNTY	JEFFERSON
JOB NO.	J6I3131
CONTRACT ID.	
PROJECT NO.	
BRIDGE NO.	A07998

DATE	DESCRIPTION

MISSOURI HIGHWAYS AND TRANSPORTATION COMMISSION
105 WEST CAPITOL
JEFFERSON CITY, MO 65102
1-888-ASK-MODOT (1-888-275-6636)

IF A SEAL IS PRESENT ON THIS SHEET IT HAS BEEN ELECTRONICALLY SEALED AND DATED.

BILL OF REINFORCING STEEL

NO. REQ'D.	MARK NO. SIZE	MARK NO. MARK	LOCATION	EPOXY (E)	SHAPE NO.	STIRRUP (S)	SUBSTR. (X)	VARIES (V)	NO. EACH	B FT. IN.	C FT. IN.	D FT. IN.	E FT. IN.	F FT. IN.	H FT. IN.	K FT. IN.	NOMINAL LENGTH FT. IN.	ACTUAL LENGTH FT. IN.	WEIGHT LBS.
			SLAB																
8	6	H1	BACKWALL	E	20					44 0.000							44 0	44 0	529
6	6	S1	SLAB	E	20					43 9.000							43 9	43 9	394
			CURB																
20	5	R1	CURB	E	19	S				3 3.000	13.500						4 5	4 3	89
20	5	R2	CURB	E	28	S					13.500	3 3.000	12.000				5 5	5 2	108
			TOTALS																
	5			E															197
	6			E															923
			TOTAL																0
			TOTAL	E															1120
			Slab on Girder																
	5			E															197
	6			E															923
			TOTAL																1120

BILL OF REINFORCING STEEL

NO. REQ'D.	MARK NO. SIZE	MARK NO. MARK	LOCATION	EPOXY (E)	SHAPE NO.	STIRRUP (S)	SUBSTR. (X)	VARIES (V)	NO. EACH	B FT. IN.	C FT. IN.	D FT. IN.	E FT. IN.	F FT. IN.	H FT. IN.	K FT. IN.	NOMINAL LENGTH FT. IN.	ACTUAL LENGTH FT. IN.	WEIGHT LBS.

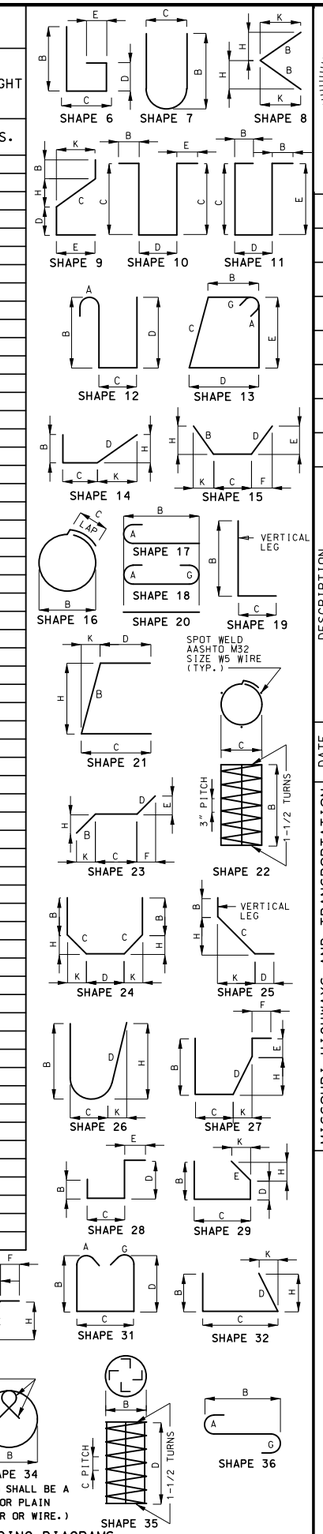

STATE OF MISSOURI
DAVID JAMES HAGEMEYER
NUMBER PE-2007002788
PROFESSIONAL ENGINEER

THIS SHEET HAS BEEN SIGNED, SEALED AND DATED ELECTRONICALLY.

DATE PREPARED	10/3/2016
ROUTE	I-55
STATE	MO
DISTRICT	BR
SHEET NO.	5
COUNTY	JEFFERSON
JOB NO.	J6I3131
CONTRACT ID.	
PROJECT NO.	
BRIDGE NO.	A07998

DESCRIPTION

DATE

IF A SEAL IS PRESENT ON THIS SHEET IT HAS BEEN ELECTRONICALLY SEALED AND DATED.

MISSOURI HIGHWAYS AND TRANSPORTATION COMMISSION

105 WEST CAPITOL
JEFFERSON CITY, MO 65102
1-888-ASK-MODOT (1-888-275-6636)

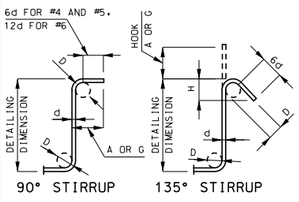

STIRRUP HOOK DIMENSIONS

GRADES 40 - 50 - 60 KSI

BAR SIZE	D (IN.)	90° HOOK: HOOK A OR G	135° HOOK: HOOK A OR G	135° HOOK: APPROX. H
#4	2"	4 1/2"	4 1/2"	3"
#5	2 1/2"	6"	5 1/2"	3 3/4"
#6	4 1/2"	12"	8"	4 1/2"

NOTE: UNLESS OTHERWISE NOTED, DIAMETER "D" IS THE SAME FOR ALL BENDS AND HOOKS ON A BAR.

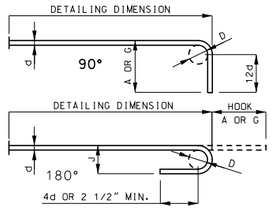

END HOOK DIMENSIONS

BAR SIZE	D (IN.)	ALL GRADES: 180° HOOKS A OR G	180° HOOKS J	90° HOOKS A OR G
#3	2 1/4"	5"	3"	6"
#4	3"	6"	4"	8"
#5	3 3/4"	7"	5"	10"
#6	4 1/2"	8"	6"	12"
#7	5 1/4"	10"	7"	14"
#8	6"	11"	8"	16"
#9	9 1/2"	15"	11 3/4"	19"
#10	10 3/4"	17"	13 1/4"	22"
#11	12"	19"	14 3/4"	2'-0"
#14	18 1/4"	2'-3"	21 3/4"	2'-7"

NOTE:
ALL STANDARD HOOKS AND BENDS OTHER THAN 180 DEGREE ARE TO BE BENT WITH SAME PROCEDURE AS FOR 90 DEGREE STANDARD HOOKS.
HOOKS AND BENDS SHALL BE IN ACCORDANCE WITH THE PROCEDURES AS SHOWN ON THIS SHEET.
E = EPOXY COATED REINFORCEMENT.
S = STIRRUP.
X = BAR IS INCLUDED IN SUBSTRUCTURE QUANTITIES.
V = BAR DIMENSIONS VARY IN EQUAL INCREMENTS BETWEEN DIMENSIONS SHOWN ON THIS LINE AND THE FOLLOWING LINE.
NO. EA. = NUMBER OF BARS OF EACH LENGTH.
NOMINAL LENGTHS ARE BASED ON OUT TO OUT DIMENSIONS SHOWN IN BENDING DIAGRAMS AND ARE LISTED FOR FABRICATORS USE. (NEAREST INCH)
ACTUAL LENGTHS ARE MEASURED ALONG CENTERLINE BAR TO THE NEAREST INCH.
PAYWEIGHTS ARE BASED ON ACTUAL LENGTHS.
FOUR ANGLE OR CHANNEL SPACERS ARE REQUIRED FOR EACH COLUMN SPIRAL. SPACERS ARE TO BE PLACED ON INSIDE OF SPIRALS. LENGTH AND WEIGHT OF COLUMN SPIRALS DO NOT INCLUDE SPLICES OR SPACERS.
REINFORCING STEEL (GRADE 60) FY = 60,000 PSI.

Detailed Aug. 2016
Checked Aug. 2016

Note: This drawing is not to scale. Follow dimensions.

SEC/SUR 416 TWP 40N RGE 6E

U.I.P. AND REHAB EXISTING (42'-50'-42') CONTINUOUS CONCRETE VOIDED SLAB SPANS (VARIES RA)

General Notes:

Design Specifications:
2002 - AASHTO LFD (17th Edition) Standard Specifications
Load Factor Design
Bridge Deck Rating = 4

Miscellaneous:
In order to maintain grade and a minimum thickness of overlay as shown on plans it may be necessary to use additional quantities of overlay at various locations throughout the structure. The cost of furnishing and installing the overlay will be considered completely covered in the contract unit price, including all additional labor, materials or equipment for variations in thickness of overlay.

Roadway surfacing adjacent to bridge ends shall match bridge overlay (Roadway Item).

Outline of old work is indicated by light dashed lines. Heavy lines indicate new work.

Contractor shall verify all dimensions in field before ordering new material.

Traffic Handling:
Traffic to be maintained on structure during construction. See Roadway Plans for traffic control.

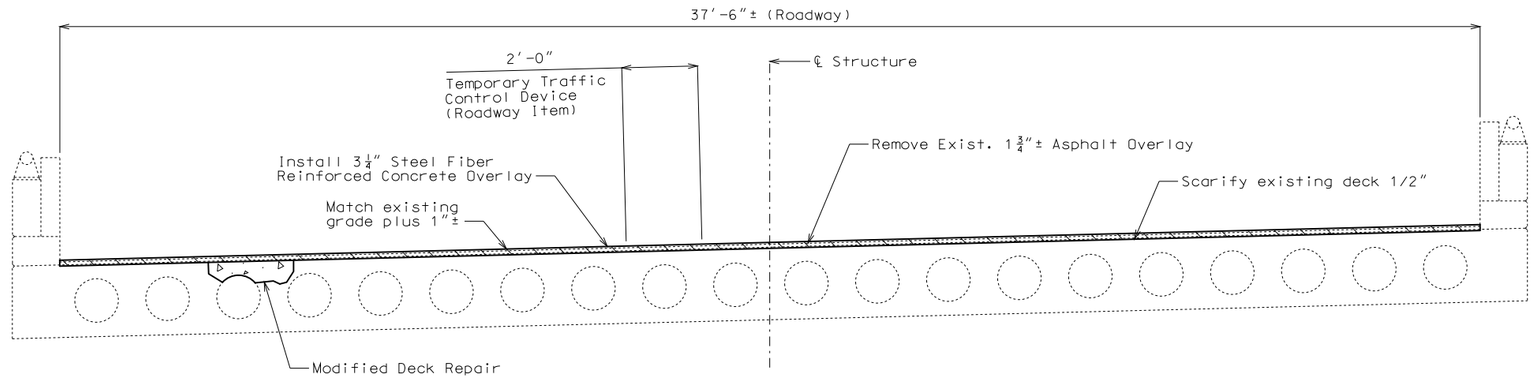

TYPICAL SECTION THRU EXISTING SLAB

Estimated Quantities		
Item		Total
Scarification of Bridge Deck	sq. yard	573
Removal of Asphalt Wearing Surface	sq. foot	5155
Steel Fiber Reinforced Concrete Overlay	sq. yard	573
Modified Deck Repair	sq. foot	900

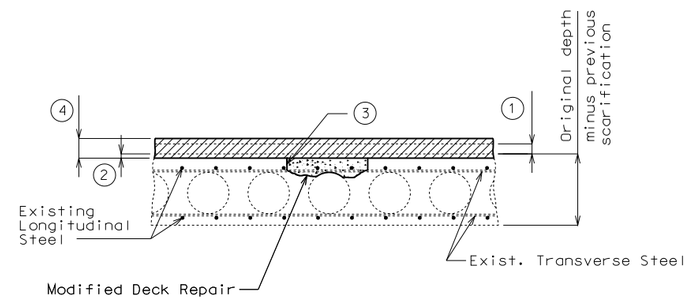

MODIFIED DECK REPAIR

1. Remove existing asphalt overlay.
2. Scarify existing deck 1/2".
3. One inch vertical side shall be established outside the deteriorated area. See Sec 704.
4. 3 1/4" (min.) for Steel Fiber Reinforced Concrete Overlay.

Notes:

An exposed void in the deck shall be patched as approved by the engineer in a manner that shall maintain the void area completely free of concrete. Cost of patching an exposed void will be considered completely covered by the contract unit price for Modified Deck Repair.

Concrete in Modified Deck Repair may be poured monolithically if existing steel is not exposed by more than half the diameter of a bar.

REPAIRS TO BRIDGE: I-55 NB OVER THIRD STREET

ROUTE I-55 FROM ROUTE Z TO ROUTE 67

ABOUT 4.5 MILES SOUTH OF ROUTE Z

STA. 862+51.58± (Match Existing)

Detailed Apr. 2016
Checked July 2016

Note: This drawing is not to scale. Follow dimensions.

STATE OF MISSOURI
DAVID JAMES HAGEMEYER
NUMBER PE-2007002788
PROFESSIONAL ENGINEER
THIS SHEET HAS BEEN SIGNED, SEALED AND DATED ELECTRONICALLY.

DATE PREPARED 10/3/2016
ROUTE I-55 | STATE MO
DISTRICT BR | SHEET NO. 1
COUNTY JEFFERSON
JOB NO. J6I3131
CONTRACT ID.
PROJECT NO.
BRIDGE NO. A08304

DESCRIPTION	DATE

IF A SEAL IS PRESENT ON THIS SHEET IT HAS BEEN ELECTRONICALLY SEALED AND DATED.

MISSOURI HIGHWAYS AND TRANSPORTATION COMMISSION
105 WEST CAPITOL
JEFFERSON CITY, MO 65102
1-888-ASK-MODOT (1-888-275-6636)

SEC/SUR 416 TWP 40N RGE 6E

U.I.P. AND REHAB EXISTING (42'-50'-42') CONTINUOUS CONCRETE VOIDED SLAB SPANS (VARIES RA)

General Notes:

Design Specifications:

2002 - AASHTO LFD (17th Edition) Standard Specifications
Load Factor Design
Bridge Deck Rating = 4

Miscellaneous:

In order to maintain grade and a minimum thickness of overlay as shown on plans it may be necessary to use additional quantities of overlay at various locations throughout the structure. The cost of furnishing and installing the overlay will be considered completely covered in the contract unit price, including all additional labor, materials or equipment for variations in thickness of overlay.

Roadway surfacing adjacent to bridge ends shall match bridge overlay (Roadway Item).

Outline of old work is indicated by light dashed lines. Heavy lines indicate new work.

Contractor shall verify all dimensions in field before ordering new material.

Traffic Handling:

Traffic to be maintained on structure during construction. See Roadway Plans for traffic control.

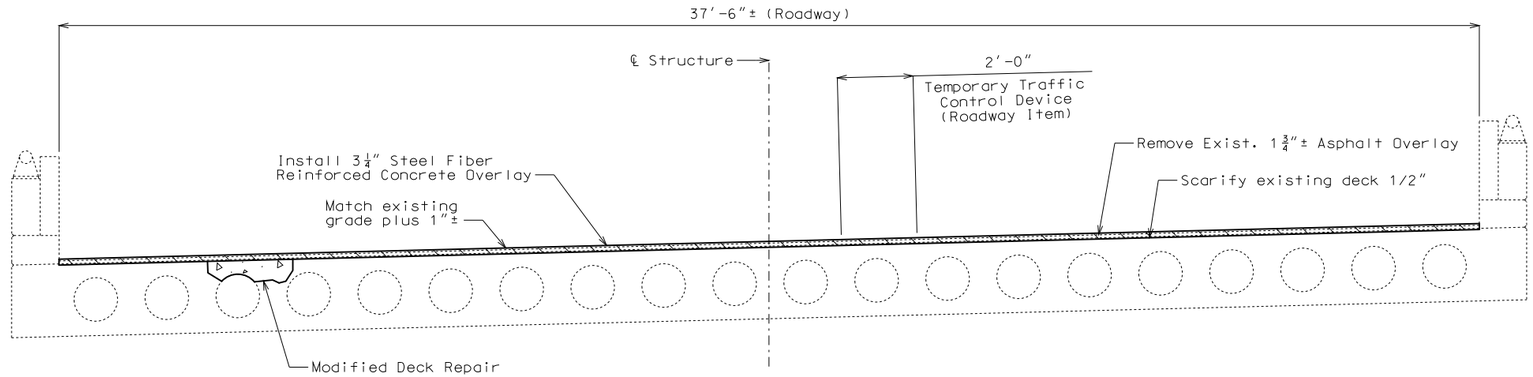

TYPICAL SECTION THRU EXISTING SLAB

Estimated Quantities		
Item		Total
Scarification of Bridge Deck	sq. yard	565
Removal of Asphalt Wearing Surface	sq. foot	5088
Steel Fiber Reinforced Concrete Overlay	sq. yard	565
Modified Deck Repair	sq. foot	800

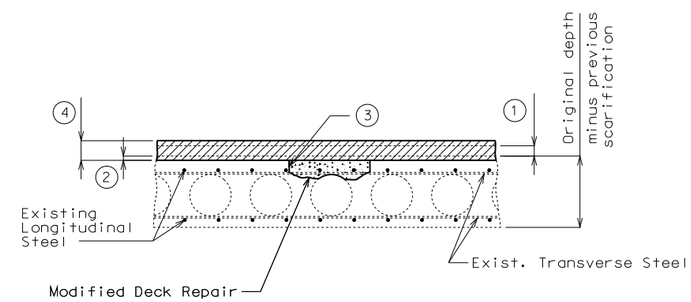

MODIFIED DECK REPAIR

1. Remove existing asphalt overlay.
2. Scarify existing deck 1/2".
3. One inch vertical side shall be established outside the deteriorated area. See Sec 704.
4. 3 1/4" (min.) for Steel Fiber Reinforced Concrete Overlay.

Notes:

An exposed void in the deck shall be patched as approved by the engineer in a manner that shall maintain the void area completely free of concrete. Cost of patching an exposed void will be considered completely covered by the contract unit price for Modified Deck Repair.

Concrete in Modified Deck Repair may be poured monolithically if existing steel is not exposed by more than half the diameter of a bar.

REPAIRS TO BRIDGE: I-55 SB OVER THIRD STREET

ROUTE I-55 FROM ROUTE Z TO ROUTE 67

ABOUT 4.5 MILES SOUTH OF ROUTE Z

STA. 862+49.83± (Match Existing)

Detailed Apr. 2016
Checked July 2016

Note: This drawing is not to scale. Follow dimensions.

STATE OF MISSOURI
DAVID JAMES HAGEMEYER
NUMBER PE-2007002788
PROFESSIONAL ENGINEER

THIS SHEET HAS BEEN SIGNED, SEALED AND DATED ELECTRONICALLY.

DATE PREPARED 10/3/2016

ROUTE	STATE
I-55	MO
DISTRICT	SHEET NO.
BR	1

COUNTY JEFFERSON

JOB NO. J6I3131

CONTRACT ID.

PROJECT NO.

BRIDGE NO. A08305

DATE	DESCRIPTION

MISSOURI HIGHWAYS AND TRANSPORTATION COMMISSION
105 WEST CAPITOL
JEFFERSON CITY, MO 65102
1-888-ASK-MODOT (1-888-275-6636)

IF A SEAL IS PRESENT ON THIS SHEET IT HAS BEEN ELECTRONICALLY SEALED AND DATED.

SEC/SUR 19 TWP 41N RGE 6E

U.I.P. AND REHAB EXISTING (49'-58'-36') CONTINUOUS CONCRETE VOIDED SLAB SPANS

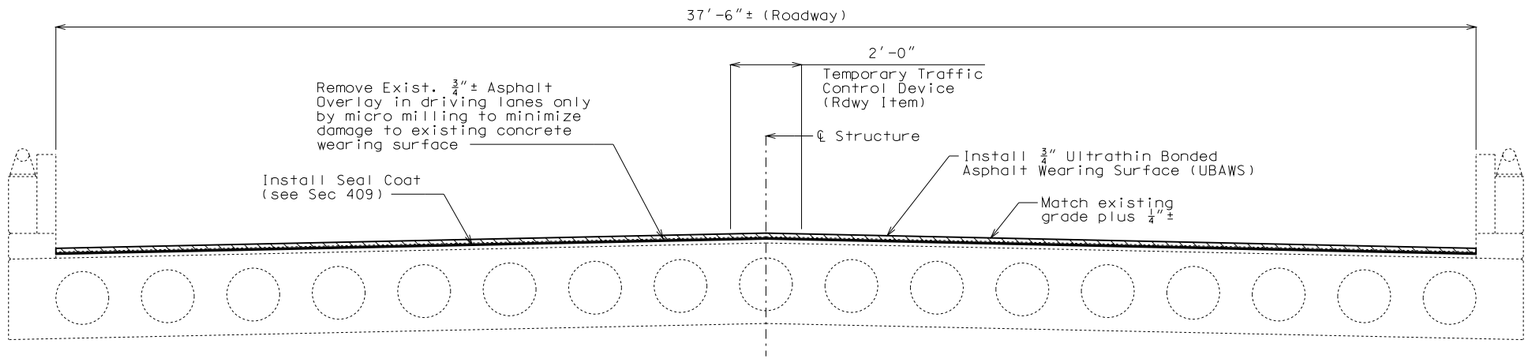

TYPICAL SECTION THRU EXISTING SLAB

General Notes:

Design Specifications:
2002 - AASHTO LFD (17th Edition) Standard Specifications
Load Factor Design
Bridge Deck Rating = 7

Miscellaneous:
In order to maintain grade and a minimum thickness of overlay as shown on plans it may be necessary to use additional quantities of overlay at various locations throughout the structure. The cost of furnishing and installing the overlay will be considered completely covered in the contract unit price, including all additional labor, materials or equipment for variations in thickness of overlay.

Roadway surfacing adjacent to bridge ends shall match bridge overlay (Roadway Item).

Outline of old work is indicated by light dashed lines. Heavy lines indicate new work.

Contractor shall verify all dimensions in field before ordering new material.

Contractor shall remove all asphalt overlay to existing concrete substrate.

Traffic Handling:
Traffic to be maintained on structure during construction. See Roadway Plans for traffic control.

Estimated Quantities

Item		Total
Removal of Asphalt Wearing Surface	sq. foot	3783
CRS-2P Emulsified Asphalt, Seal Coat	gal.	240
Seal Coat Aggregate, Grade B1	sq. yard	606
Ultrathin Bonded Wearing Surface (UBAWS), Grade A or B	sq. yard	606

Detailed Mar. 2016
Checked May 2016

Note: This drawing is not to scale. Follow dimensions.

Sheet No. 1 of 1

REPAIRS TO BRIDGE: I-55 NB OVER HERKY HORINE ROAD
ROUTE I-55 FROM ROUTE Z TO ROUTE 67
ABOUT 1.2 MILES SOUTH OF ROUTE Z
STA. 687+76.70± (Match Existing)

STATE OF MISSOURI
DAVID JAMES HAGEMEYER
NUMBER PE-2007002788
PROFESSIONAL ENGINEER
THIS SHEET HAS BEEN SIGNED, SEALED AND DATED ELECTRONICALLY.

DATE PREPARED 10/3/2016
ROUTE I-55 | STATE MO
DISTRICT BR | SHEET NO. 1
COUNTY JEFFERSON
JOB NO. J6I3131
CONTRACT ID.
PROJECT NO.
BRIDGE NO. A09444

DATE	DESCRIPTION

MISSOURI HIGHWAYS AND TRANSPORTATION COMMISSION
105 WEST CAPITOL
JEFFERSON CITY, MO 65102
1-888-ASK-MODOT (1-888-275-6636)

IF A SEAL IS PRESENT ON THIS SHEET IT HAS BEEN ELECTRONICALLY SEALED AND DATED.

SEC/SUR 19 TWP 41N RGE 6E

U.I.P. AND REHAB EXISTING (49'-58'-36') CONTINUOUS CONCRETE VOIDED SLAB SPANS

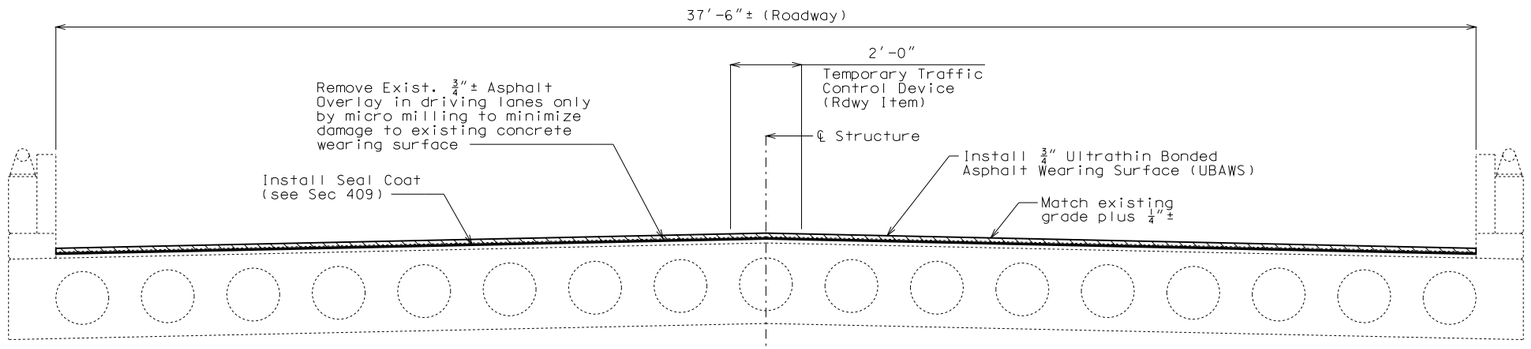

TYPICAL SECTION THRU EXISTING SLAB

General Notes:

Design Specifications:

2002 - AASHTO LFD (17th Edition) Standard Specifications
Load Factor Design
Bridge Deck Rating = 7

Miscellaneous:

In order to maintain grade and a minimum thickness of overlay as shown on plans it may be necessary to use additional quantities of overlay at various locations throughout the structure. The cost of furnishing and installing the overlay will be considered completely covered in the contract unit price, including all additional labor, materials or equipment for variations in thickness of overlay.

Roadway surfacing adjacent to bridge ends shall match bridge overlay (Roadway Item).

Outline of old work is indicated by light dashed lines. Heavy lines indicate new work.

Contractor shall verify all dimensions in field before ordering new material.

Contractor shall remove all asphalt overlay to existing concrete substrate.

Traffic Handling:

Traffic to be maintained on structure during construction. See Roadway Plans for traffic control.

Estimated Quantities

Item		Total
Removal of Asphalt Wearing Surface	sq. foot	3783
CRS-2P Emulsified Asphalt, Seal Coat	gal.	240
Seal Coat Aggregate, Grade B1	sq. yard	606
Ultrathin Bonded Wearing Surface (UBAWS), Grade A or B	sq. yard	606

Detailed Mar. 2016
Checked May 2016

Note: This drawing is not to scale. Follow dimensions.

Sheet No. 1 of 1

REPAIRS TO BRIDGE: I-55 SB OVER HERKY HORINE ROAD

ROUTE I-55 FROM ROUTE Z TO ROUTE 67

ABOUT 1.2 MILES SOUTH OF ROUTE Z

STA. 687+76.70± (Match Existing)

STATE OF MISSOURI
DAVID JAMES HAGEMEYER
NUMBER PE-2007002788
PROFESSIONAL ENGINEER

THIS SHEET HAS BEEN SIGNED, SEALED AND DATED ELECTRONICALLY.

DATE PREPARED 10/3/2016

ROUTE	STATE
I-55	MO
DISTRICT	SHEET NO.
BR	1

COUNTY JEFFERSON

JOB NO. J6I3131

CONTRACT ID.

PROJECT NO.

BRIDGE NO. A09445

DATE	DESCRIPTION

MISSOURI HIGHWAYS AND TRANSPORTATION COMMISSION

105 WEST CAPITOL
JEFFERSON CITY, MO 65102
1-888-ASK-MODOT (1-888-275-6636)

IF A SEAL IS PRESENT ON THIS SHEET IT HAS BEEN ELECTRONICALLY SEALED AND DATED.

SEC/SUR 19 TWP 41N RGE 6E

U.I.P. AND REHAB EXISTING (125'-150'-125') CONTINUOUS COMPOSITE PLATE GIRDER SPANS (25° RA)

General Notes:

Design Specifications:

2002 - AASHTO LFD (17th Edition) Standard Specifications
Load Factor Design
Bridge Deck Rating = 6

Miscellaneous:

In order to maintain grade and a minimum thickness of overlay as shown on plans it may be necessary to use additional quantities of overlay at various locations throughout the structure. The cost of furnishing and installing the overlay will be considered completely covered in the contract unit price, including all additional labor, materials or equipment for variations in thickness of overlay.

Roadway surfacing adjacent to bridge ends shall match bridge overlay (Roadway Item).

Outline of old work is indicated by light dashed lines. Heavy lines indicate new work.

Contractor shall verify all dimensions in field before ordering new material.

Contractor shall remove all asphalt overlay to existing concrete substrate.

Traffic Handling:

Traffic to be maintained on structure during construction. See Roadway Plans for traffic control.

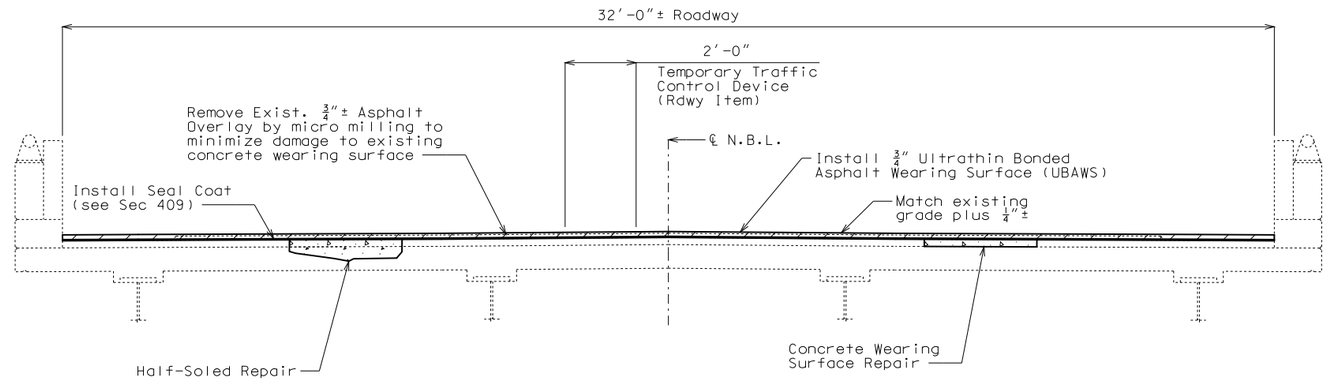

TYPICAL SECTION THRU EXISTING SLAB

Estimated Quantities		
Item		Total
Removal of Asphalt Wearing Surface	sq. foot	10524
CRS-2P Emulsified Asphalt, Seal Coat	gal.	580
Seal Coat Aggregate, Grade B1	sq. yard	1439
Ultrathin Bonded Wearing Surface (UBAWS), Grade A or B	sq. yard	1439
Repairing Concrete Deck (Half-Soling)	sq. foot	250
Concrete Wearing Surface Repair	sq. foot	250

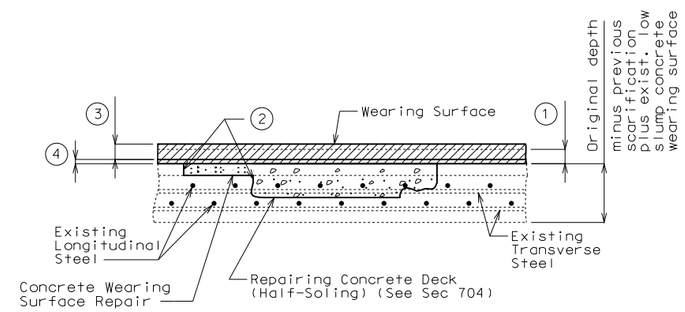

CONCRETE SLAB REPAIRS

1. Remove existing asphalt overlay by micro milling.
2. One inch vertical side shall be established outside the deteriorated area. See Sec 704.
3. 3/4" (min.) for Ultrathin Bonded Wearing Surface (UBAWS).
4. 3/8" CRS-2P Emulsified Asphalt Seal Coat.

REPAIRS TO BRIDGE: I-55 NB OVER JOACHIM CREEK

ROUTE I-55 FROM ROUTE Z TO ROUTE 67

ABOUT 1.5 MILES SOUTH OF ROUTE Z

STA. 700+56.50± (Match Existing)

Detailed Mar. 2016
Checked May 2016

Note: This drawing is not to scale. Follow dimensions.

STATE OF MISSOURI
DAVID JAMES HAGEMEYER
NUMBER PE-2007002788
PROFESSIONAL ENGINEER

THIS SHEET HAS BEEN SIGNED, SEALED AND DATED ELECTRONICALLY.

DATE PREPARED 10/6/2016

ROUTE	STATE
I-55	MO
DISTRICT	SHEET NO.
BR	1

COUNTY: JEFFERSON

JOB NO. J6I3131

CONTRACT ID.

PROJECT NO.

BRIDGE NO. A09455

DATE	DESCRIPTION

IF A SEAL IS PRESENT ON THIS SHEET IT HAS BEEN ELECTRONICALLY SEALED AND DATED.

MISSOURI HIGHWAYS AND TRANSPORTATION COMMISSION

105 WEST CAPITOL
JEFFERSON CITY, MO 65102
1-888-ASK-MODOT (1-888-275-6636)

SEC/SUR 19 TWP 41N RGE 6E

U.I.P. AND REHAB EXISTING (125'-150'-125') CONTINUOUS COMPOSITE PLATE GIRDER SPANS (25° RA)

General Notes:

Design Specifications:
2002 - AASHTO LFD (17th Edition) Standard Specifications
Load Factor Design
Bridge Deck Rating = 6

Miscellaneous:
In order to maintain grade and a minimum thickness of overlay as shown on plans it may be necessary to use additional quantities of overlay at various locations throughout the structure. The cost of furnishing and installing the overlay will be considered completely covered in the contract unit price, including all additional labor, materials or equipment for variations in thickness of overlay.

Roadway surfacing adjacent to bridge ends shall match bridge overlay (Roadway Item).

Outline of old work is indicated by light dashed lines. Heavy lines indicate new work.

Contractor shall verify all dimensions in field before ordering new material.

Contractor shall remove all asphalt overlay to existing concrete substrate.

Traffic Handling:
Traffic to be maintained on structure during construction. See Roadway Plans for traffic control.

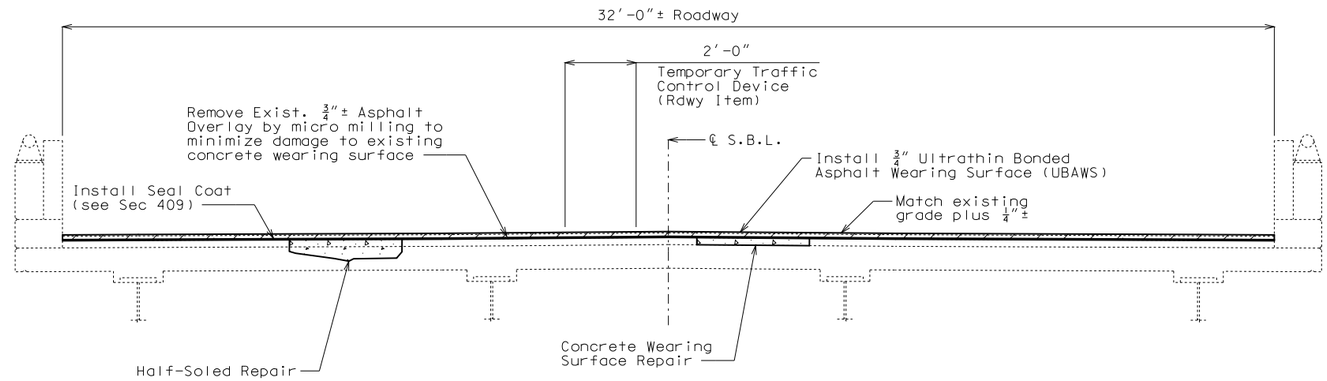

TYPICAL SECTION THRU EXISTING SLAB

Estimated Quantities		
Item		Total
Removal of Asphalt Wearing Surface	sq. foot	10524
CRS-2P Emulsified Asphalt, Seal Coat	gal.	580
Seal Coat Aggregate, Grade B1	sq. yard	1439
Ultrathin Bonded Wearing Surface (UBAWS), Grade A or B	sq. yard	1439
Repairing Concrete Deck (Half-Soling)	sq. foot	250
Concrete Wearing Surface Repair	sq. foot	250

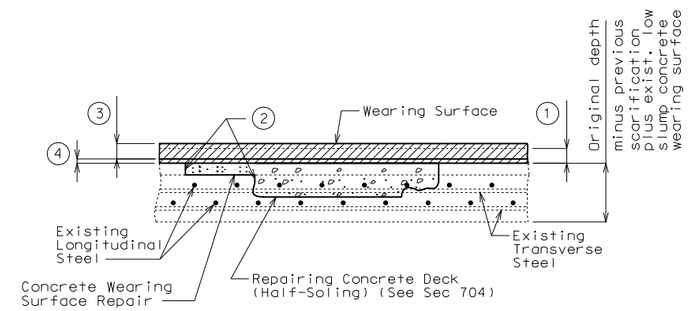

CONCRETE SLAB REPAIRS

1. Remove existing asphalt overlay by micro milling.
2. One inch vertical side shall be established outside the deteriorated area. See Sec 704.
3. 3/4" (min.) for Ultrathin Bonded Wearing Surface (UBAWS).
4. 3/8" CRS-2P Emulsified Seal Coat.

REPAIRS TO BRIDGE: I-55 SB OVER JOACHIM CREEK

ROUTE I-55 FROM ROUTE Z TO ROUTE 67

ABOUT 1.5 MILES SOUTH OF ROUTE Z

STA. 700+95.67± (Match Existing)

Detailed Mar. 2016
Checked May 2016

Note: This drawing is not to scale. Follow dimensions.

STATE OF MISSOURI
DAVID JAMES HAGEMEYER
NUMBER PE-2007002788
PROFESSIONAL ENGINEER
THIS SHEET HAS BEEN SIGNED, SEALED AND DATED ELECTRONICALLY.

DATE PREPARED 10/6/2016
ROUTE I-55 | STATE MO
DISTRICT BR | SHEET NO. 1
COUNTY JEFFERSON
JOB NO. J6I3131
CONTRACT ID.
PROJECT NO.
BRIDGE NO. A09456

DATE	DESCRIPTION

IF A SEAL IS PRESENT ON THIS SHEET IT HAS BEEN ELECTRONICALLY SEALED AND DATED.

MISSOURI HIGHWAYS AND TRANSPORTATION COMMISSION
105 WEST CAPITOL
JEFFERSON CITY, MO 65102
1-888-ASK-MODOT (1-888-275-6636)

SEC/SUR 30 TWP 41N RGE 5E

U.I.P. AND REHAB EXISTING (42'-50'-40') CONTINUOUS CONCRETE VOIDED SLAB SPANS

General Notes:

Design Specifications:

2002 - AASHTO LFD (17th Edition) Standard Specifications
Load Factor Design
Bridge Deck Rating = 7

Miscellaneous:

In order to maintain grade and a minimum thickness of overlay as shown on plans it may be necessary to use additional quantities of overlay at various locations throughout the structure. The cost of furnishing and installing the overlay will be considered completely covered in the contract unit price, including all additional labor, materials or equipment for variations in thickness of overlay.

Roadway surfacing adjacent to bridge ends shall match bridge overlay (Roadway Item).

Outline of old work is indicated by light dashed lines. Heavy lines indicate new work.

Contractor shall verify all dimensions in field before ordering new material.

Traffic Handling:

Traffic to be maintained on structure during construction. See Roadway Plans for traffic control.

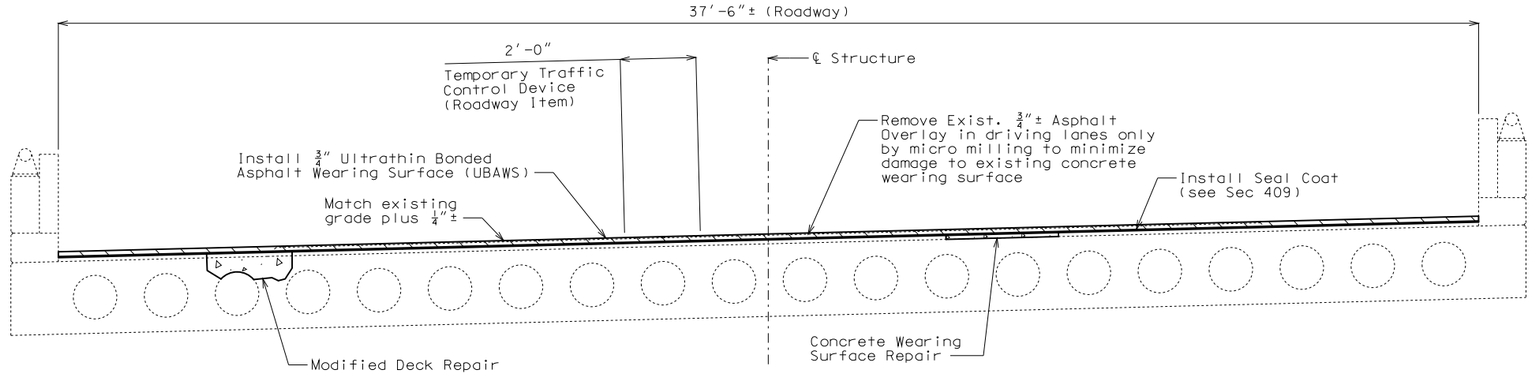

TYPICAL SECTION THRU EXISTING SLAB

Estimated Quantities		
Item		Total
Removal of Asphalt Wearing Surface	sq. foot	3497
CRS-2P Emulsified Asphalt, Seal Coat	gal.	210
Seal Coat Aggregate, Grade B1	sq. yard	560
Ultrathin Bonded Wearing Surface (UBAWS), Grade A or B	sq. yard	560
Modified Deck Repair	sq. foot	100
Concrete Wearing Surface Repair	sq. foot	100

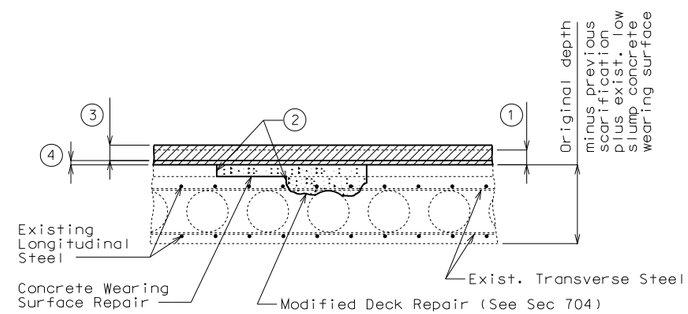

CONCRETE SLAB REPAIRS

1. Remove existing asphalt overlay by micro milling.
2. One inch vertical side shall be established outside the deteriorated area. See Sec 704.
3. 3/4" (min.) for Ultrathin Bonded Wearing Surface (UBAWS).
4. 3/8" CRS-2P Emulsified Asphalt Seal Coat.

An exposed void in the deck shall be patched as approved by the engineer in a manner that shall maintain the void area completely free of concrete. Cost of patching an exposed void will be considered completely covered by the contract unit price for Modified Deck Repair.

REPAIRS TO BRIDGE: I-55 NB OVER MCNUTT ST. (SPUR 61)

ROUTE I-55 FROM ROUTE Z TO ROUTE 67

ABOUT 2.2 MILES SOUTH OF ROUTE Z

STA. 742+24.66± (Match Existing)

Detailed Apr. 2016
Checked July 2016

Note: This drawing is not to scale. Follow dimensions.

STATE OF MISSOURI
DAVID JAMES HAGEMEYER
NUMBER PE-2007002788
PROFESSIONAL ENGINEER

THIS SHEET HAS BEEN SIGNED, SEALED AND DATED ELECTRONICALLY.

DATE PREPARED 10/6/2016

ROUTE	STATE
I-55	MO
DISTRICT	SHEET NO.
BR	1

COUNTY JEFFERSON

JOB NO. J6I3131

CONTRACT ID.

PROJECT NO.

BRIDGE NO. A09466

DATE	DESCRIPTION

MISSOURI HIGHWAYS AND TRANSPORTATION COMMISSION

105 WEST CAPITOL
JEFFERSON CITY, MO 65102
1-888-ASK-MODOT (1-888-275-6636)

IF A SEAL IS PRESENT ON THIS SHEET IT HAS BEEN ELECTRONICALLY SEALED AND DATED.

SEC/SUR 30 TWP 41N RGE 5E

U.I.P. AND REHAB EXISTING (42'-50'-40') CONTINUOUS CONCRETE VOIDED SLAB SPANS

General Notes:

Design Specifications:

2002 - AASHTO LFD (17th Edition) Standard Specifications
Load Factor Design
Bridge Deck Rating = 7

Miscellaneous:

In order to maintain grade and a minimum thickness of overlay as shown on plans it may be necessary to use additional quantities of overlay at various locations throughout the structure. The cost of furnishing and installing the overlay will be considered completely covered in the contract unit price, including all additional labor, materials or equipment for variations in thickness of overlay.

Roadway surfacing adjacent to bridge ends shall match bridge overlay (Roadway Item).

Outline of old work is indicated by light dashed lines. Heavy lines indicate new work.

Contractor shall verify all dimensions in field before ordering new material.

Traffic Handling:

Traffic to be maintained on structure during construction. See Roadway Plans for traffic control.

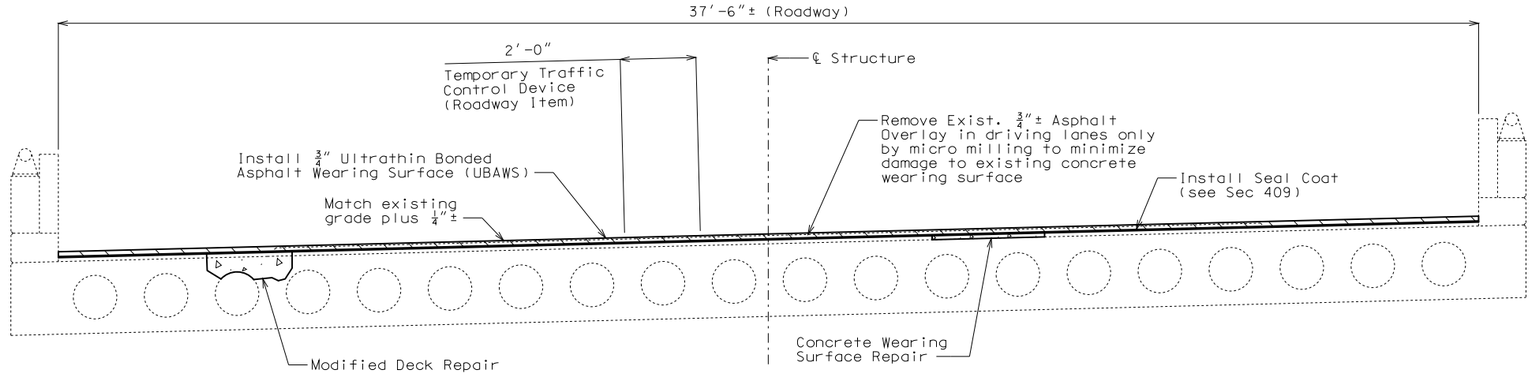

TYPICAL SECTION THRU EXISTING SLAB

Estimated Quantities		
Item		Total
Removal of Asphalt Wearing Surface	sq. foot	3497
CRS-2P Emulsified Asphalt, Seal Coat	gal.	210
Seal Coat Aggregate, Grade B1	sq. yard	560
Ultrathin Bonded Wearing Surface (UBAWS), Grade A or B	sq. yard	560
Modified Deck Repair	sq. foot	100
Concrete Wearing Surface Repair	sq. foot	100

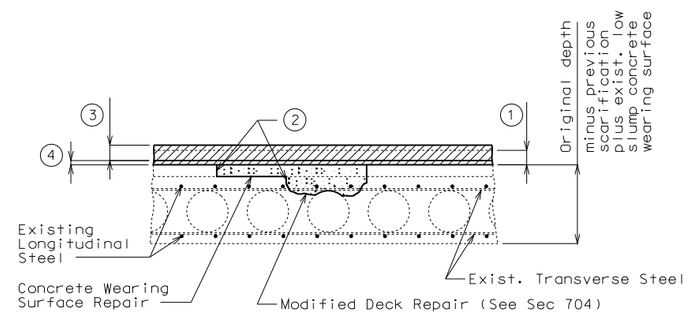

CONCRETE SLAB REPAIRS

1. Remove existing asphalt overlay by micro milling.
2. One inch vertical side shall be established outside the deteriorated area. See Sec 704.
3. 3/4" (min.) for Ultrathin Bonded Wearing Surface (UBAWS).
4. 3/8" CRS-2P Emulsified Asphalt Seal Coat.

An exposed void in the deck shall be patched as approved by the engineer in a manner that shall maintain the void area completely free of concrete. Cost of patching an exposed void will be considered completely covered by the contract unit price for Modified Deck Repair.

REPAIRS TO BRIDGE: I-55 SB OVER MCNUTT ST. (SPUR 61)

ROUTE I-55 FROM ROUTE Z TO ROUTE 67

ABOUT 2.2 MILES SOUTH OF ROUTE Z

STA. 742+24.66± (Match Existing)

Detailed Apr. 2016
Checked July 2016

Note: This drawing is not to scale. Follow dimensions.

STATE OF MISSOURI
DAVID JAMES HAGEMEYER
NUMBER PE-2007002788
PROFESSIONAL ENGINEER

THIS SHEET HAS BEEN SIGNED, SEALED AND DATED ELECTRONICALLY.

DATE PREPARED 10/6/2016

ROUTE	STATE
I-55	MO
DISTRICT	SHEET NO.
BR	1

COUNTY JEFFERSON

JOB NO. J6I3131

CONTRACT ID.

PROJECT NO.

BRIDGE NO. A09467

DATE	DESCRIPTION

IF A SEAL IS PRESENT ON THIS SHEET IT HAS BEEN ELECTRONICALLY SEALED AND DATED.

MISSOURI HIGHWAYS AND TRANSPORTATION COMMISSION

105 WEST CAPITOL
JEFFERSON CITY, MO 65102
1-888-ASK-MODOT (1-888-275-6636)

SEC/SUR 420 TWP 41N RGE 6E

U.I.P. AND REHAB EXISTING (45′-56′-45′) CONTINUOUS CONCRETE VOIDED SLAB SPANS (10° 47′ 30″ RA)

General Notes:

Design Specifications:
2002 - AASHTO LFD (17th Edition) Standard Specifications
Load Factor Design
Bridge Deck Rating = 6

Miscellaneous:
In order to maintain grade and a minimum thickness of overlay as shown on plans it may be necessary to use additional quantities of overlay at various locations throughout the structure. The cost of furnishing and installing the overlay will be considered completely covered in the contract unit price, including all additional labor, materials or equipment for variations in thickness of overlay.

Roadway surfacing adjacent to bridge overlay ends shall match bridge overlay (Roadway Item).

Outline of old work is indicated by light dashed lines. Heavy lines indicate new work.

Contractor shall verify all dimensions in field before ordering new material.

Contractor shall remove all asphalt overlay to existing concrete substrate.

Traffic Handling:
Traffic to be maintained on structure during construction. See Roadway Plans for traffic control.

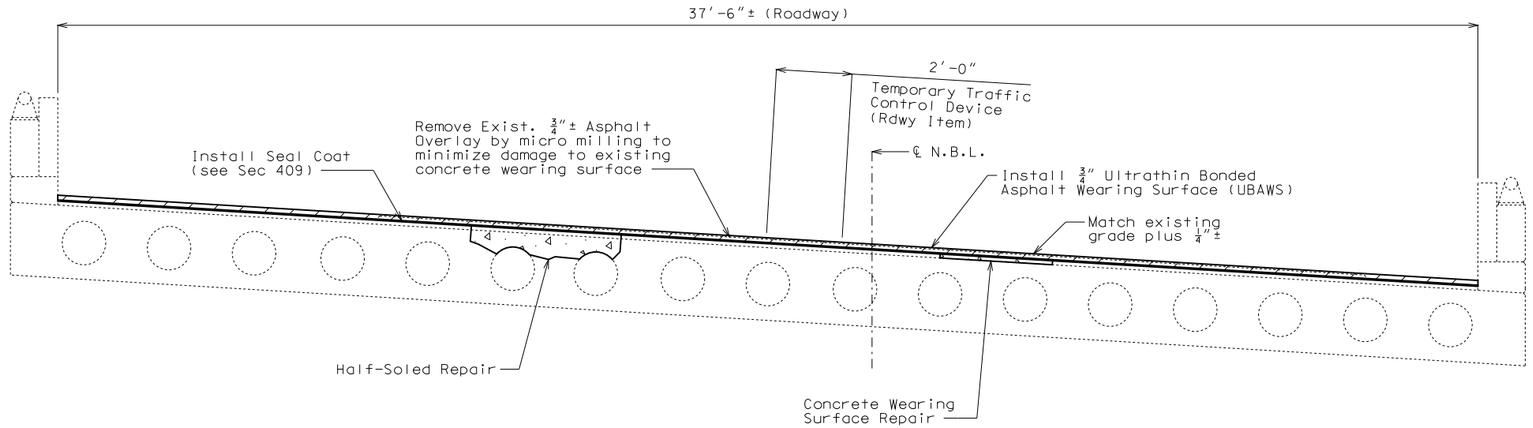

TYPICAL SECTION THRU EXISTING SLAB

Estimated Quantities		
Item		Total
Removal of Asphalt Wearing Surface	sq. foot	3862
CRS-2P Emulsified Asphalt, Seal Coat	gal.	240
Seal Coat Aggregate, Grade B1	sq. yard	619
Ultrathin Bonded Wearing Surface (UBAWS), Grade A or B	sq. yard	619
Repairing Concrete Deck (Half-Soling)	sq. foot	250
✳ Waterproofing Membrane	sq. yard	170
Concrete Wearing Surface Repair	sq. foot	250

✳ See Job Special Provisions.

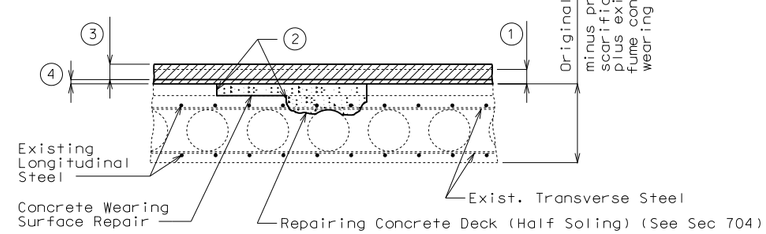

CONCRETE SLAB REPAIRS

1. Remove existing asphalt overlay by micro milling.
2. One inch vertical side shall be established outside the deteriorated area. See Sec 704.
3. 3/4″ (min.) for Ultrathin Bonded Wearing Surface (UBAWS).
4. CRS-2P Emulsified Asphalt Seal Coat.

An exposed void in the deck shall be patched as approved by the engineer in a manner that shall maintain the void area completely free of concrete. Cost of patching an exposed void will be considered completely covered by the contract unit price for Repairing Concrete Deck (Half-Soling).

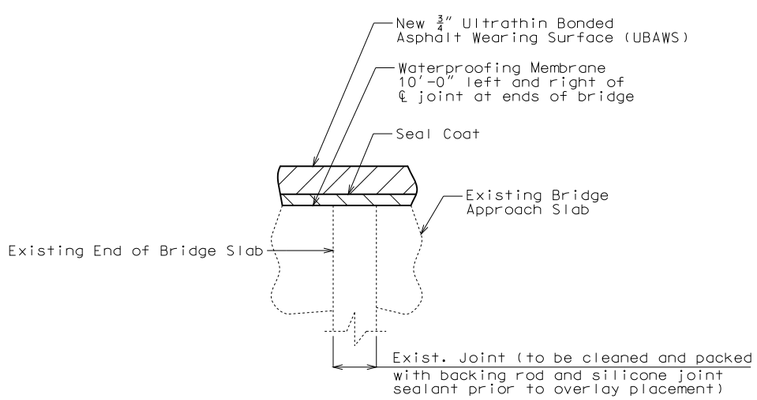

TYP. SECTION AT END BENTS NO. 1 & NO. 4
SHOWING WATERPROOFING MEMBRANE

REPAIRS TO BRIDGE: I-55 NB OVER RTE. Z
STATE ROAD FROM ROUTE M TO RTE. 67
ABOUT 3.7 MILES SOUTH OF RTE. M
STA. 624+99.58± (Match Existing)

Detailed Feb. 2016
Checked Mar. 2016

Note: This drawing is not to scale. Follow dimensions.

STATE OF MISSOURI
DAVID JAMES HAGEMEYER
NUMBER PE-2007002788
PROFESSIONAL ENGINEER
THIS SHEET HAS BEEN SIGNED, SEALED AND DATED ELECTRONICALLY.

DATE PREPARED 10/6/2016
ROUTE I-55 | STATE MO
DISTRICT BR | SHEET NO. 1
COUNTY JEFFERSON
JOB NO. J6I3131
CONTRACT ID.
PROJECT NO.
BRIDGE NO. A09515

DESCRIPTION	DATE

MISSOURI HIGHWAYS AND TRANSPORTATION COMMISSION
105 WEST CAPITOL
JEFFERSON CITY, MO 65102
1-888-ASK-MODOT (1-888-275-6636)

IF A SEAL IS PRESENT ON THIS SHEET IT HAS BEEN ELECTRONICALLY SEALED AND DATED.

SEC/SUR 420 TWP 41N RGE 6E

U.I.P. AND REHAB EXISTING (45′-56′-45′) CONTINUOUS CONCRETE VOIDED SLAB SPANS (10° 47′ 30″ RA)

General Notes:

Design Specifications:

2002 - AASHTO LFD (17th Edition) Standard Specifications
Load Factor Design
Bridge Deck Rating = 6

Miscellaneous:

In order to maintain grade and a minimum thickness of overlay as shown on plans it may be necessary to use additional quantities of overlay at various locations throughout the structure. The cost of furnishing and installing the overlay will be considered completely covered in the contract unit price, including all additional labor, materials or equipment for variations in thickness of overlay.

Roadway surfacing adjacent to bridge ends shall match bridge overlay (Roadway Item).

Outline of old work is indicated by light dashed lines. Heavy lines indicate new work.

Contractor shall verify all dimensions in field before ordering new material.

Contractor shall remove all asphalt overlay to existing concrete substrate.

Traffic Handling:

Traffic to be maintained on structure during construction. See Roadway Plans for traffic control.

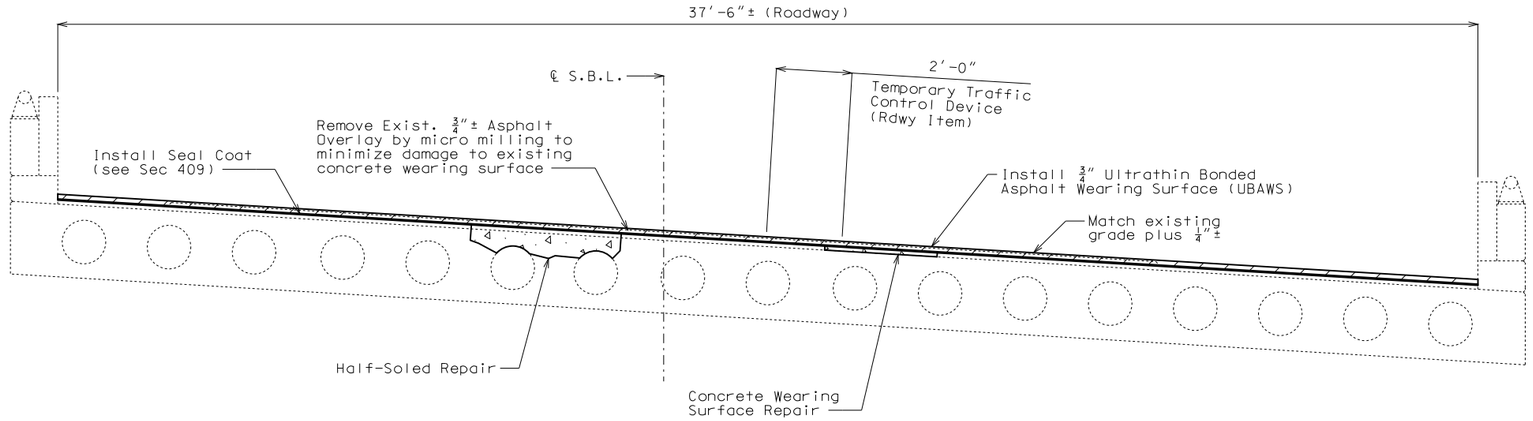

TYPICAL SECTION THRU EXISTING SLAB

Estimated Quantities

Item		Total
Removal of Asphalt Wearing Surface	sq. foot	3862
CRS-2P Emulsified Asphalt, Seal Coat	gal.	240
Seal Coat Aggregate, Grade B1	sq. yard	619
Ultrathin Bonded Wearing Surface (UBAWS), Grade A or B	sq. yard	619
Repairing Concrete Deck (Half-Soling)	sq. foot	250
✳ Waterproofing Membrane	sq. yard	170
Concrete Wearing Surface Repair	sq. foot	250

✳ See Job Special Provisions.

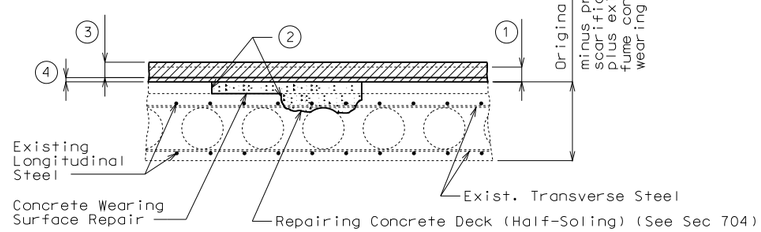

CONCRETE SLAB REPAIRS

1. Remove existing asphalt overlay by micro milling.
2. One inch vertical side shall be established outside the deteriorated area. See Sec 704.
3. 3/4″ (min.) for Ultrathin Bonded Wearing Surface (UBAWS).
4. CRS-2P Emulsified Asphalt Seal Coat.

An exposed void in the deck shall be patched as approved by the engineer in a manner that shall maintain the void area completely free of concrete. Cost of patching an exposed void will be considered completely covered by the contract unit price for Repairing Concrete Deck (Half-Soling).

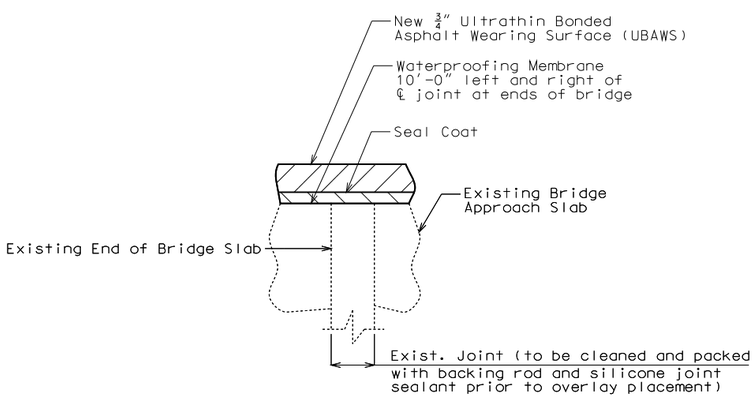

TYP. SECTION AT END BENTS NO. 1 & NO. 4
SHOWING WATERPROOFING MEMBRANE

REPAIRS TO BRIDGE: I-55 SB OVER RTE. Z

STATE ROAD FROM ROUTE M TO RTE. 67

ABOUT 3.7 MILES SOUTH OF RTE. M

STA. 625+15.59± (Match Existing)

Detailed Feb. 2016
Checked Mar. 2016

Note: This drawing is not to scale. Follow dimensions.

STATE OF MISSOURI
DAVID JAMES HAGEMEYER
NUMBER PE-2007002788
PROFESSIONAL ENGINEER

THIS SHEET HAS BEEN SIGNED, SEALED AND DATED ELECTRONICALLY.

DATE PREPARED	
10/6/2016	
ROUTE I-55	STATE MO
DISTRICT BR	SHEET NO. 1
COUNTY JEFFERSON	
JOB NO. J6I3131	
CONTRACT ID.	
PROJECT NO.	
BRIDGE NO. A09516	

DESCRIPTION	DATE

IF A SEAL IS PRESENT ON THIS SHEET IT HAS BEEN ELECTRONICALLY SEALED AND DATED.

MISSOURI HIGHWAYS AND TRANSPORTATION COMMISSION
105 WEST CAPITOL
JEFFERSON CITY, MO 65102
1-888-ASK-MODOT (1-888-275-6636)

SEC/SUR 420 TWP 41N RGE 6E

U.I.P. AND REHAB EXISTING (47'-58'-47') CONTINUOUS COMPOSITE WIDE FLANGE BEAM SPANS (16° RA)

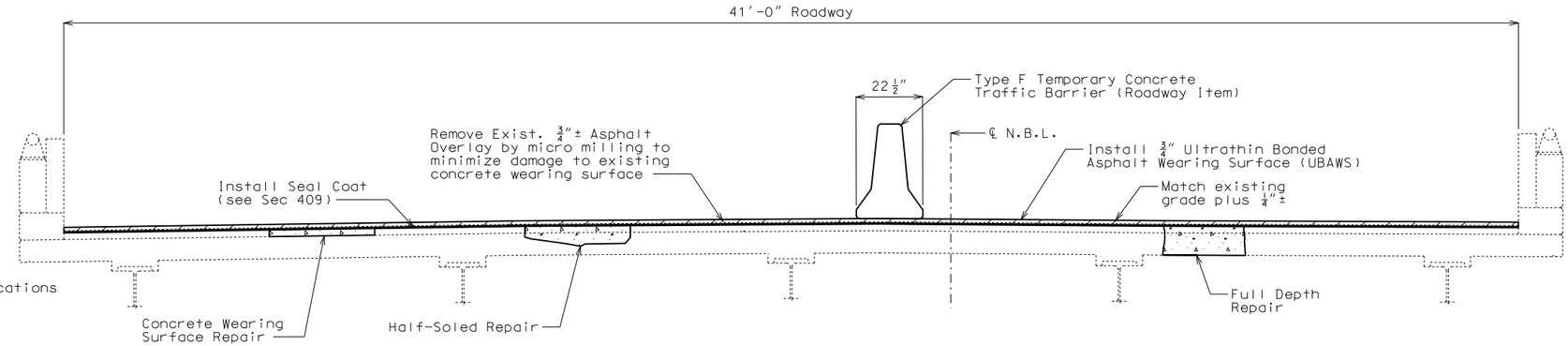

TYPICAL SECTION THRU EXISTING SLAB

General Notes:

Design Specifications:
2002 - AASHTO LFD (17th Ed.) Standard Specifications
Load Factor Design
Bridge Deck Rating = 5

Design Loading:
HS20-44 and Modified 24,000 lb Tandem Axle
(1961 & New Construction)

Design Unit Stresses:

Class B-1 Concrete (End Post)	f'c = 4,000 psi
Class B-2 Concrete (Slab)	f'c = 4,000 psi
Reinforcing Steel (Grade 60)	fy = 60,000 psi

Joint Filler:
All joint filler shall be in accordance with Sec 1057 for preformed sponge rubber expansion and partition joint filler, except as noted.

Miscellaneous:
In order to maintain grade and a minimum thickness of overlay as shown on plans it may be necessary to use additional quantities of overlay at various locations throughout the structure. The cost of furnishing and installing the overlay will be considered completely covered in the contract unit price, including all additional labor, materials or equipment for variations in thickness of overlay.

Roadway surfacing adjacent to bridge overlay ends shall match bridge overlay (Roadway Item).

Outline of old work is indicated by light dashed lines. Heavy lines indicate new work.

Contractor shall verify all dimensions in field before ordering new material.

Contractor shall remove all asphalt overlay to existing concrete substrate.

Bars bonded in old concrete not removed shall be cleanly stripped and embedded into new concrete where possible.

Traffic Handling:
Traffic to be maintained on structure during construction.
See Roadway Plans for traffic control.

Estimated Quantities

Item		Total
Removal of Asphalt Wearing Surface	sq. foot	5924
Partial Removal of Existing Bridge Deck	sq. foot	250
Remove and Replace End Post	linear foot	12
CRS-2P Emulsified Asphalt, Seal Coat	gal.	280
Seal Coat Aggregate, Grade B1	sq. yard	710
Ultrathin Bonded Wearing Surface (UBAWS), Grade A or B	sq. yard	710
Class B-2 Concrete	cu. yard	28.4
Repairing Concrete Deck (Half-Soling)	sq. foot	400
Full Depth Repair	sq. foot	150
Concrete Wearing Surface Repair	sq. foot	400
Reinforcing Steel (Epoxy Coated)	pound	2330

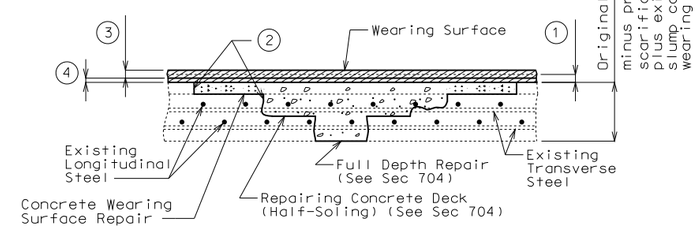

CONCRETE SLAB REPAIRS

1. Remove existing asphalt overlay by micro milling.
2. One inch vertical side shall be established outside the deteriorated area. See Sec 704.
3. 3/4" (min.) for Ultrathin Bonded Wearing Surface (UBAWS).
4. 3/8" CRS-2P Emulsified Asphalt Seal Coat.

REPAIRS TO BRIDGE: I-55 NB OVER UNION PACIFIC RR

ROUTE I-55 FROM ROUTE Z TO ROUTE A

ABOUT 0.3 MILE S. OF ROUTE Z

STA. 638+31.00± (Match Existing)

STD. 617.20
STD. 706.35

Detailed Mar. 2016
Checked Sep. 2016

Note: This drawing is not to scale. Follow dimensions.

STATE OF MISSOURI
DAVID JAMES HAGEMEYER
NUMBER PE-2007002788
PROFESSIONAL ENGINEER
THIS SHEET HAS BEEN SIGNED, SEALED AND DATED ELECTRONICALLY.

DATE PREPARED 10/3/2016
ROUTE I-55 STATE MO
DISTRICT BR SHEET NO. 1
COUNTY JEFFERSON
JOB NO. J6I3131
CONTRACT ID.
PROJECT NO.
BRIDGE NO. A09534

DATE	DESCRIPTION

IF A SEAL IS PRESENT ON THIS SHEET IT HAS BEEN ELECTRONICALLY SEALED AND DATED.

MISSOURI HIGHWAYS AND TRANSPORTATION COMMISSION
105 WEST CAPITOL
JEFFERSON CITY, MO 65102
1-888-ASK-MODOT (1-888-275-6636)

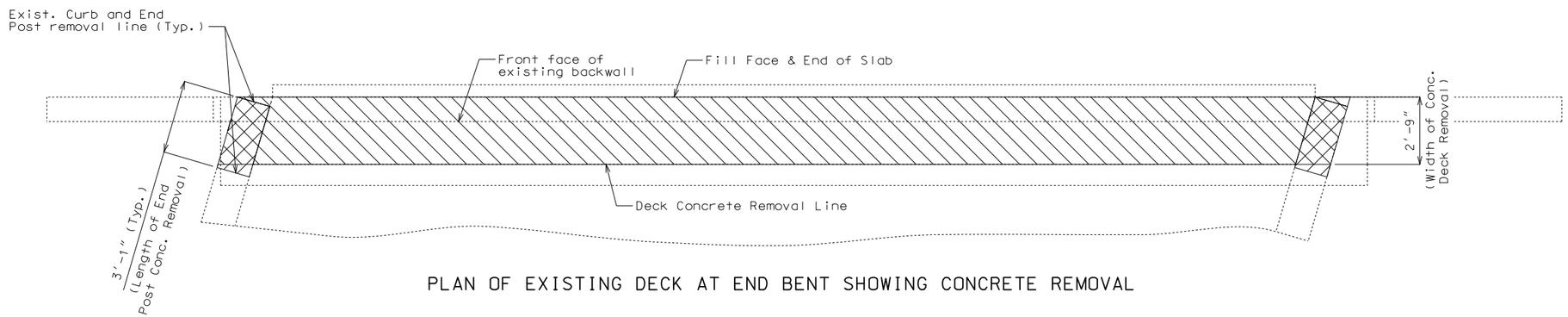

PLAN OF EXISTING DECK AT END BENT SHOWING CONCRETE REMOVAL

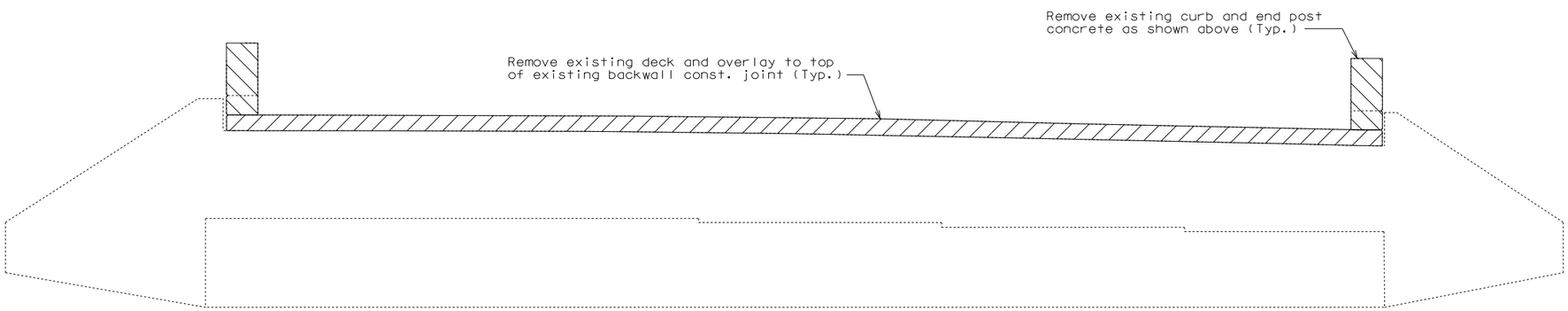

EXISTING ELEVATION OF END BENT SHOWING DECK CONCRETE REMOVAL

Notes:

The cost of bridge deck concrete removal as shown will be considered completely covered by the contract unit price for Partial Removal of Bridge Deck.

The cost of end post concrete removal as shown will be considered completely covered by the contract unit price for Remove and Replace End Post.

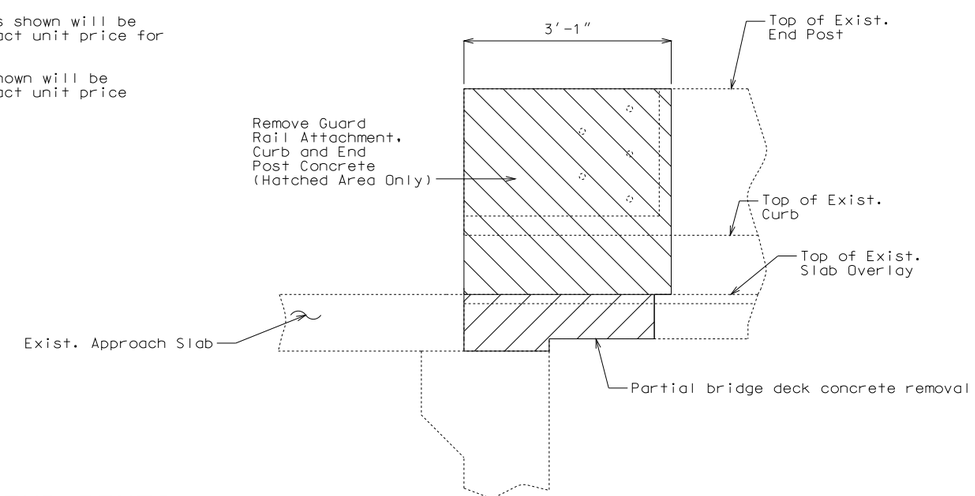

ELEVATION OF EXISTING END POST, DECK & APPROACH SLAB
SHOWING CONCRETE REMOVAL

DETAILS OF CONCRETE REMOVAL AT END BENTS

(End Bent No. 1 shown, End Bent No. 4 similar)

Detailed Mar. 2016
Checked Sep. 2016

Note: This drawing is not to scale. Follow dimensions.

STATE OF MISSOURI
DAVID JAMES HAGEMEYER
NUMBER PE-2007002788
PROFESSIONAL ENGINEER

THIS SHEET HAS BEEN SIGNED, SEALED AND DATED ELECTRONICALLY.

DATE PREPARED	10/3/2016
ROUTE	I-55
STATE	MO
DISTRICT	BR
SHEET NO.	2
COUNTY	JEFFERSON
JOB NO.	J6I3131
CONTRACT ID.	
PROJECT NO.	
BRIDGE NO.	A09534

DATE	DESCRIPTION

MISSOURI HIGHWAYS AND TRANSPORTATION COMMISSION
105 WEST CAPITOL
JEFFERSON CITY, MO 65102
1-888-ASK-MODOT (1-888-275-6636)

IF A SEAL IS PRESENT ON THIS SHEET IT HAS BEEN ELECTRONICALLY SEALED AND DATED.

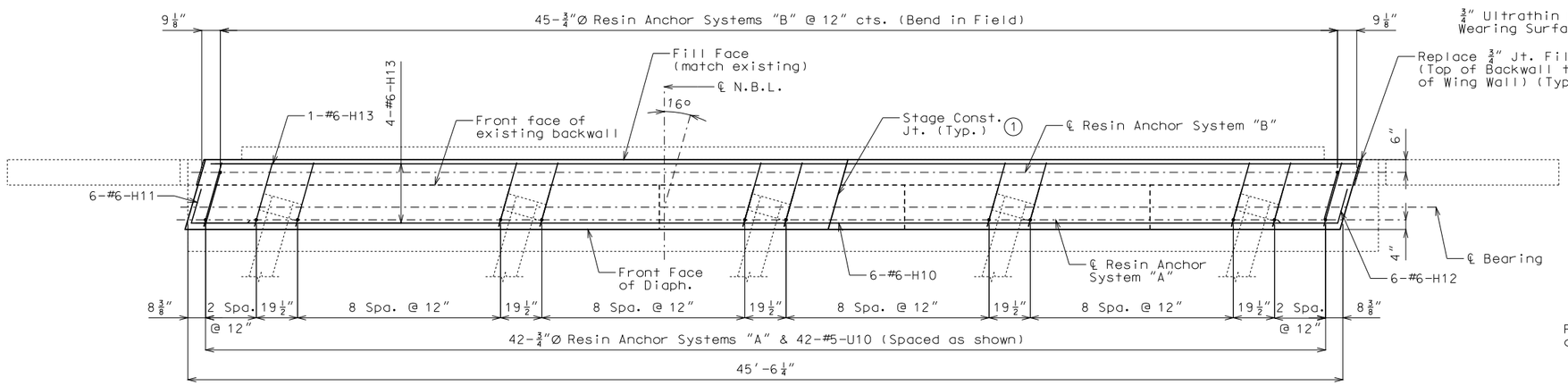

PART PLAN

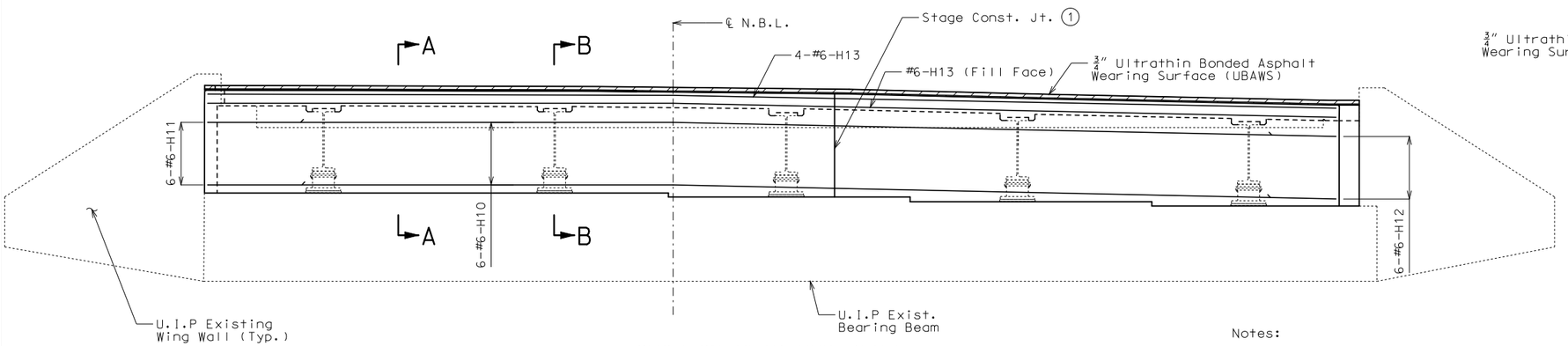

SECTION NEAR END BENT

(Resin anchor systems and #5-U10 bars not shown for clarity)

Concrete Wearing Surface and Seal Coat not shown for clarity.

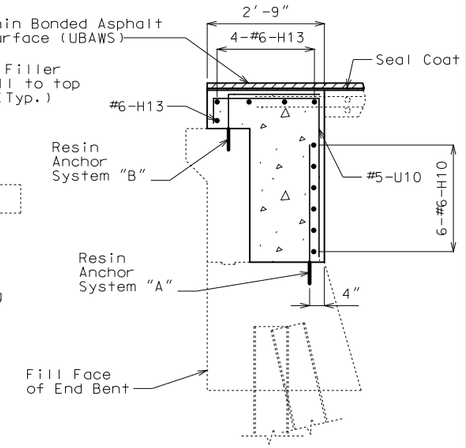

SECTION A-A

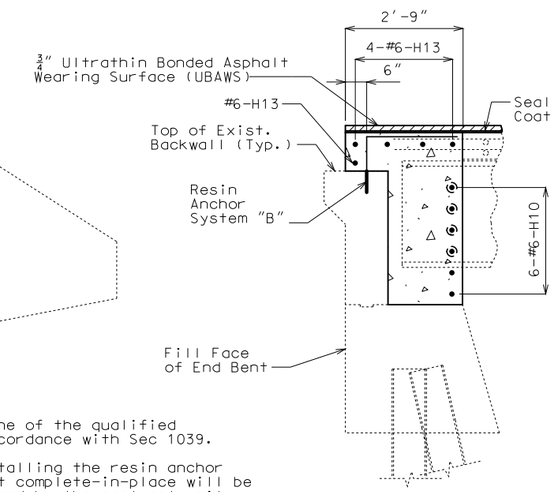

SECTION B-B

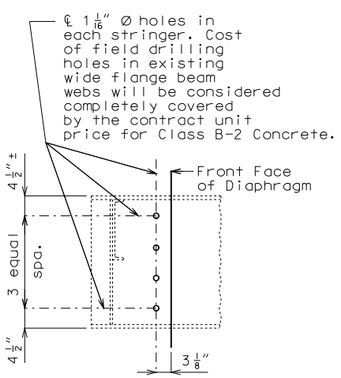

DETAIL OF WEB HOLES AT END BENTS

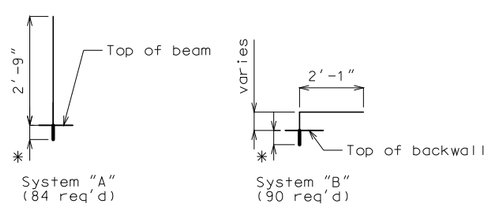

* Manufacturer's recommended embedment length (5" min.)

DETAILS OF RESIN ANCHOR SYSTEMS

1 Stage Const. Jt. location to be determined by the contractor with the approval of the Engineer.

DETAILS OF END BENTS

(End Bent No. 1 shown, End Bent No. 4 similar)

Notes:

The contractor shall use one of the qualified resin anchor systems in accordance with Sec 1039.

Cost of furnishing and installing the resin anchor systems shown on this sheet complete-in-place will be considered completely covered by the contract unit price for Class B-2 Concrete.

The minimum embedment depth in concrete with f'c = 4,000 psi for the resin anchor system shall be that required to meet the minimum ultimate pullout strength in accordance with Sec 1039 but shall not be less than 5".

An epoxy coated #6 Grade 60 reinforcing bar shall be substituted for the 3/4"Ø threaded rod.

The exposed and accessible surfaces of the existing structural steel and bearings that will be encased in concrete shall be cleaned with a minimum of SSPC-SP-2 surface preparation before concrete is poured. Payment for cleaning steel to be encased in concrete will be considered completely covered by the contract unit price for Class B-2 Concrete.

Slab concrete removal at end bents necessary to make the end bents integral will be considered completely covered by the contract unit price for Partial Removal of Existing Bridge Deck.

The #6-H10 & #6-H13 bars to be segmented to accommodate stage construction. The total bar length for #6-H10 & #6-H13 bars shown in Bill of Reinforcing Steel allows for one lap splice with a length of 3'-6". Actual bar segment lengths to be determined by contractor. The contractor may use a mechanical bar splice in lieu of a lap splice. When a mechanical bar splice is used, the actual bar segment length will be determined by the contractor to accommodate manufacturer's recommendations for installation and stage construction. The cost of furnishing and installing the bar splices will be considered completely covered by the contract unit price for Reinforcing Steel. No adjustment of the quantity of reinforcing steel will be allowed for the use of mechanical bar splices.

Detailed Mar. 2016
Checked Sep. 2016

Note: This drawing is not to scale. Follow dimensions.

STATE OF MISSOURI
DAVID JAMES HAGEMEYER
NUMBER PE-2007002788
PROFESSIONAL ENGINEER
THIS SHEET HAS BEEN SIGNED, SEALED AND DATED ELECTRONICALLY.

DATE PREPARED	
10/3/2016	
ROUTE	STATE
I-55	MO
DISTRICT	SHEET NO.
BR	2
COUNTY	
JEFFERSON	
JOB NO.	
J6I3131	
CONTRACT ID.	
PROJECT NO.	
BRIDGE NO.	
A09534	

DATE	DESCRIPTION

IF A SEAL IS PRESENT ON THIS SHEET IT HAS BEEN ELECTRONICALLY SEALED AND DATED.

MISSOURI HIGHWAYS AND TRANSPORTATION COMMISSION
105 WEST CAPITOL
JEFFERSON CITY, MO 65102
1-888-ASK-MODOT (1-888-275-6636)

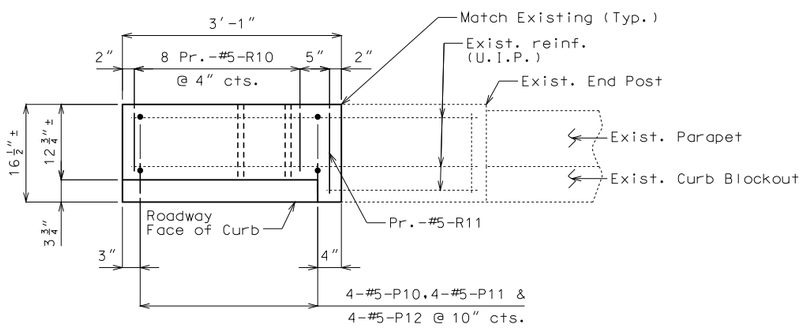

PLAN SHOWING NEW END POST REINFORCEMENT

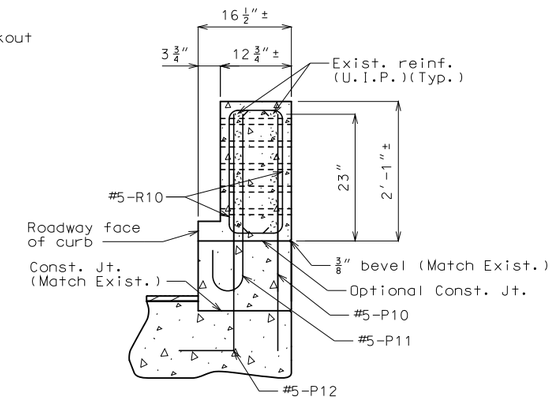

SECTION A-A

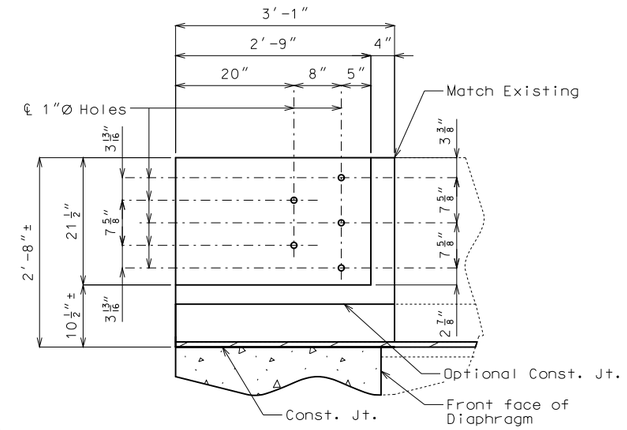

DETAILS OF NEW GUARD RAIL ATTACHMENT

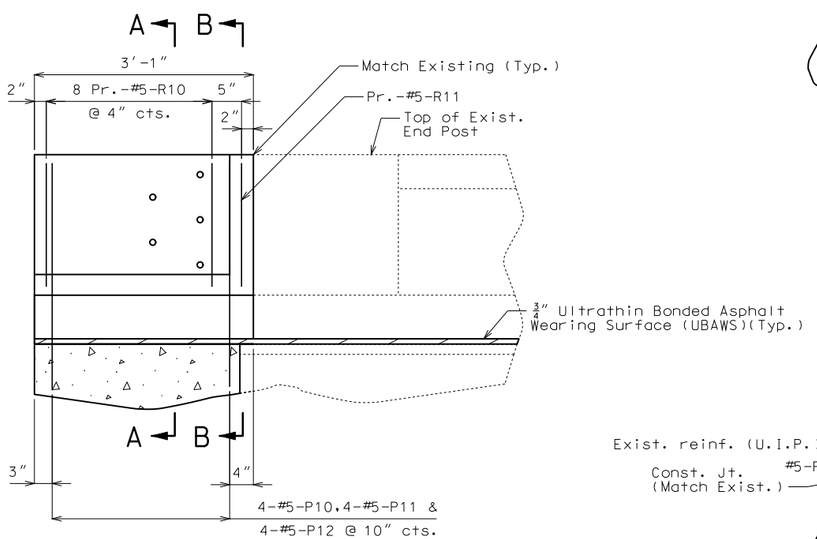

ELEVATION SHOWING NEW END POST REINFORCEMENT

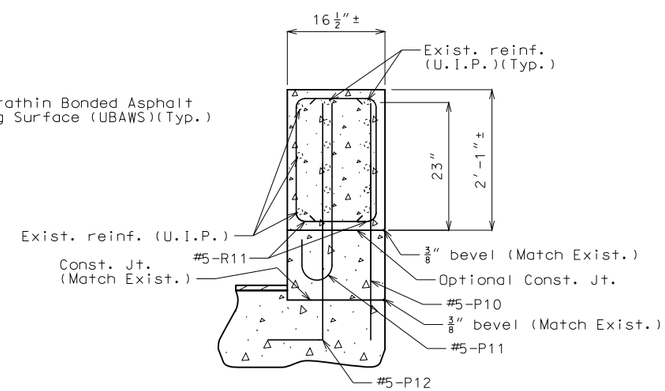

SECTION B-B

Notes:

Payment for all concrete and reinforcement for end post, complete-in-place, will be considered completely covered by the contract unit price for Remove and Replace End Post.

All exposed edges of the new end post shall match existing end post.

All concrete for end post shall be Class B-1.

DETAILS OF END POST AT END BENTS NO. 1 & NO. 4

Detailed Mar. 2016
Checked Sep. 2016

Note: This drawing is not to scale. Follow dimensions.

STATE OF MISSOURI
DAVID JAMES HAGEMEYER
NUMBER PE-2007002788
PROFESSIONAL ENGINEER

THIS SHEET HAS BEEN SIGNED, SEALED AND DATED ELECTRONICALLY.

DATE PREPARED	
10/3/2016	
ROUTE	STATE
I-55	MO
DISTRICT	SHEET NO.
BR	4
COUNTY	
JEFFERSON	
JOB NO.	
J6I3131	
CONTRACT ID.	
PROJECT NO.	
BRIDGE NO.	
A09534	

DESCRIPTION

DATE

MISSOURI HIGHWAYS AND TRANSPORTATION COMMISSION

105 WEST CAPITOL
JEFFERSON CITY, MO 65102
1-888-ASK-MODOT (1-888-275-6636)

IF A SEAL IS PRESENT ON THIS SHEET IT HAS BEEN ELECTRONICALLY SEALED AND DATED.

REV.

BILL OF REINFORCING STEEL

NO. REQ'D.	MARK NO. SIZE	MARK NO. MARK	LOCATION	EPOXY (E)	SHAPE NO.	STIRRUP (S)	SUBSTR. (X)	VARIES (V)	NO. EACH	B FT. IN.	C FT. IN.	D FT. IN.	E FT. IN.	F FT. IN.	H FT. IN.	K FT. IN.	NOMINAL LENGTH FT. IN.	ACTUAL LENGTH FT. IN.	WEIGHT LBS.
			DIAPHRAGM																
12	6	H10	DIAPHRAGM	E	20					48 9.000							48 9	48 9	879
12	6	H11	DIAPHRAGM	E	21	S				17.250	2 5.000				16.625	4.625	3 10	3 7	65
12	6	H12	DIAPHRAGM	E	23	S				17.250	2 5.000				16.625	4.625	3 10	3 9	68
10	6	H13	DIAPHRAGM	E	20					48 9.000							48 9	48 9	732
84	5	U10	DIAPHRAGM	E	11	S					3 8.000	2 7.375	7.000				6 10	6 8	584
			END POST																
16	5	P10	END POST	E	20					3 2.000							3 2	3 2	53
16	5	P11	END POST	E	17					2 7.000							3 2	3 2	53
16	5	P12	END POST	E	19	S				3 2.000	12.000						4 2	4 1	68
64	5	R10	END POST	E	10	S					9.750	22.000					3 6	3 3	217
8	5	R11	END POST	E	10	S					13.500	22.000					4 1	3 11	33
			TOTALS																
	5			E															1008
	6			E															1744
			TOTAL																0
			TOTAL	E															2752
			Slab on Girder																
	5			E															1008
	6			E															1744
			TOTAL																2752

BILL OF REINFORCING STEEL

NO. REQ'D.	MARK NO. SIZE	MARK NO. MARK	LOCATION	EPOXY (E)	SHAPE NO.	STIRRUP (S)	SUBSTR. (X)	VARIES (V)	NO. EACH	B FT. IN.	C FT. IN.	D FT. IN.	E FT. IN.	F FT. IN.	H FT. IN.	K FT. IN.	NOMINAL LENGTH FT. IN.	ACTUAL LENGTH FT. IN.	WEIGHT LBS.

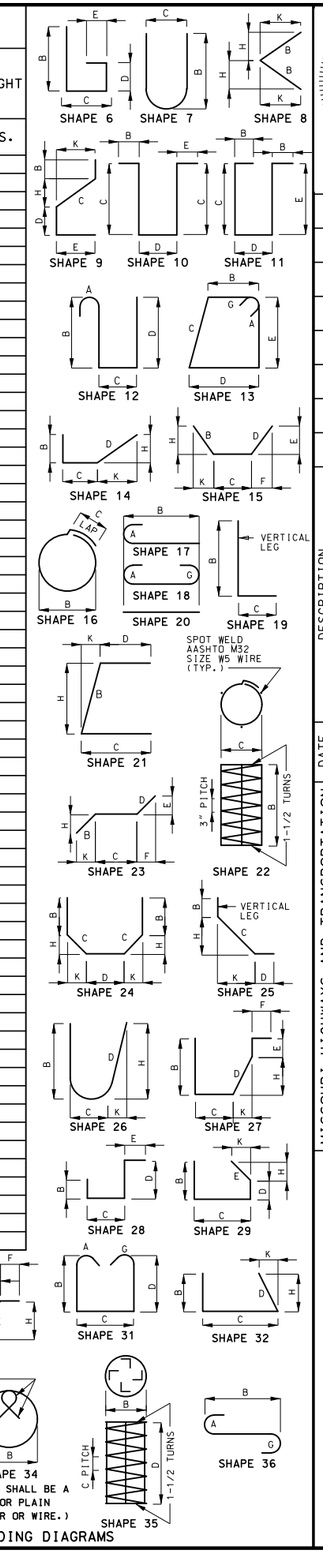

STATE OF MISSOURI
DAVID JAMES HAGEMEYER
NUMBER PE-2007002788
PROFESSIONAL ENGINEER

THIS SHEET HAS BEEN SIGNED, SEALED AND DATED ELECTRONICALLY.

DATE PREPARED 10/3/2016

ROUTE	STATE
I-55	MO
DISTRICT	SHEET NO.
BR	5

COUNTY: JEFFERSON

JOB NO. J6I3131

CONTRACT ID.

PROJECT NO.

BRIDGE NO. A09534

DESCRIPTION

DATE

IF A SEAL IS PRESENT ON THIS SHEET IT HAS BEEN ELECTRONICALLY SEALED AND DATED.

MISSOURI HIGHWAYS AND TRANSPORTATION COMMISSION

105 WEST CAPITOL
JEFFERSON CITY, MO 65102
1-888-ASK-MODOT (1-888-275-6636)

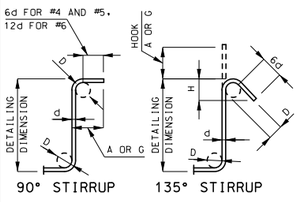

STIRRUP HOOK DIMENSIONS

GRADES 40 - 50 - 60 KSI

BAR SIZE	D (IN.)	90° HOOK: HOOK A OR G	135° HOOK: HOOK A OR G	135° HOOK: APPROX. H
#4	2"	4 1/2"	4 1/2"	3"
#5	2 1/2"	6"	5 1/2"	3 3/4"
#6	4 1/2"	12"	8"	4 1/2"

NOTE: UNLESS OTHERWISE NOTED, DIAMETER "D" IS THE SAME FOR ALL BENDS AND HOOKS ON A BAR.

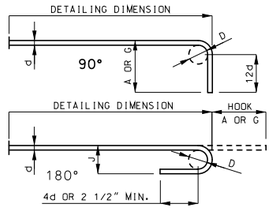

END HOOK DIMENSIONS

BAR SIZE	D (IN.)	ALL GRADES: 180° HOOKS A OR G	180° HOOKS J	90° HOOKS A OR G
#3	2 1/4"	5"	3"	6"
#4	3"	6"	4"	8"
#5	3 3/4"	7"	5"	10"
#6	4 1/2"	8"	6"	12"
#7	5 1/4"	10"	7"	14"
#8	6"	11"	8"	16"
#9	9 1/2"	15"	11 3/4"	19"
#10	10 3/4"	17"	13 1/4"	22"
#11	12"	19"	14 3/4"	2'-0"
#14	18 1/4"	2'-3"	21 3/4"	2'-7"

NOTE:
ALL STANDARD HOOKS AND BENDS OTHER THAN 180 DEGREE ARE TO BE BENT WITH SAME PROCEDURE AS FOR 90 DEGREE STANDARD HOOKS.
HOOKS AND BENDS SHALL BE IN ACCORDANCE WITH THE PROCEDURES AS SHOWN ON THIS SHEET.
E = EPOXY COATED REINFORCEMENT.
S = STIRRUP.
X = BAR IS INCLUDED IN SUBSTRUCTURE QUANTITIES.
V = BAR DIMENSIONS VARY IN EQUAL INCREMENTS BETWEEN DIMENSIONS SHOWN ON THIS LINE AND THE FOLLOWING LINE.
NO. EA. = NUMBER OF BARS OF EACH LENGTH.
NOMINAL LENGTHS ARE BASED ON OUT TO OUT DIMENSIONS SHOWN IN BENDING DIAGRAMS AND ARE LISTED FOR FABRICATORS USE. (NEAREST INCH)
ACTUAL LENGTHS ARE MEASURED ALONG CENTERLINE BAR TO THE NEAREST INCH.
PAYWEIGHTS ARE BASED ON ACTUAL LENGTHS.
FOUR ANGLE OR CHANNEL SPACERS ARE REQUIRED FOR EACH COLUMN SPIRAL. SPACERS ARE TO BE PLACED ON INSIDE OF SPIRALS. LENGTH AND WEIGHT OF COLUMN SPIRALS DO NOT INCLUDE SPLICES OR SPACERS.
REINFORCING STEEL (GRADE 60) FY = 60,000 PSI.

Detailed Aug. 2016
Checked Sep. 2016

Note: This drawing is not to scale. Follow dimensions.

SEC/SUR 420 TWP 41N RGE 6E

U.I.P. AND REHAB EXISTING (47'-58'-47') CONTINUOUS COMPOSITE WIDE FLANGE BEAM SPANS (16° RA)

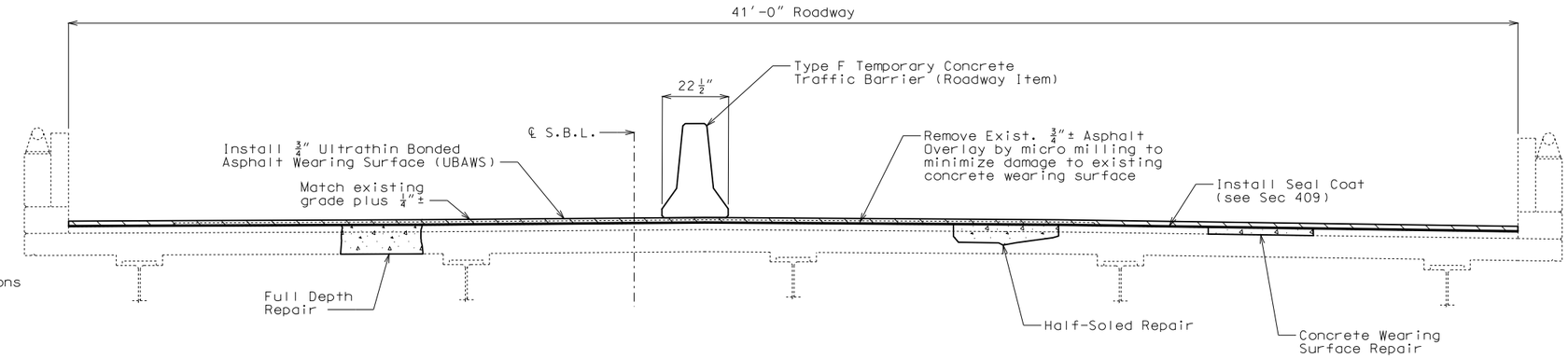

TYPICAL SECTION THRU EXISTING SLAB

General Notes:

Design Specifications:
2002 - AASHTO LFD (17th Ed.) Standard Specifications
Load Factor Design
Bridge Deck Rating = 5

Design Loading:
HS20-44 and Modified 24,000 lb Tandem Axle
(1961 & New Construction)

Design Unit Stresses:

Class B-1 Concrete (End Post)	f'c = 4,000 psi
Class B-2 Concrete (Slab)	f'c = 4,000 psi
Reinforcing Steel (Grade 60)	fy = 60,000 psi

Joint Filler:
All joint filler shall be in accordance with Sec 1057 for preformed sponge rubber expansion and partition joint filler, except as noted.

Miscellaneous:
In order to maintain grade and a minimum thickness of overlay as shown on plans it may be necessary to use additional quantities of overlay at various locations throughout the structure. The cost of furnishing and installing the overlay will be considered completely covered in the contract unit price, including all additional labor, materials or equipment for variations in thickness of overlay.

Roadway surfacing adjacent to bridge overlay ends shall match bridge overlay (Roadway Item).

Outline of old work is indicated by light dashed lines. Heavy lines indicate new work.

Contractor shall verify all dimensions in field before ordering new material.

Contractor shall remove all asphalt overlay to existing concrete substrate.

Bars bonded in old concrete not removed shall be cleanly stripped and embedded into new concrete where possible.

Traffic Handling:
Traffic to be maintained on structure during construction. See Roadway Plans for traffic control.

Estimated Quantities

Item		Total
Removal of Asphalt Wearing Surface	sq. foot	5924
Partial Removal of Existing Bridge Deck	sq. foot	250
Remove and Replace End Post	linear foot	12
CRS-2P Emulsified Asphalt, Seal Coat	gal.	280
Seal Coat Aggregate, Grade B1	sq. yard	710
Ultrathin Bonded Wearing Surface (UBAWS), Grade A or B	sq. yard	710
Class B-2 Concrete	cu. yard	28.4
Repairing Concrete Deck (Half-Soling)	sq. foot	400
Full Depth Repair	sq. foot	120
Concrete Wearing Surface Repair	sq. foot	400
Reinforcing Steel (Epoxy Coated)	pound	2330

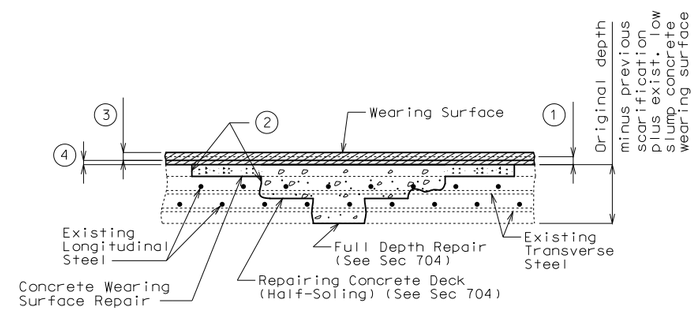

CONCRETE SLAB REPAIRS

1. Remove existing asphalt overlay by micro milling.
2. One inch vertical side shall be established outside the deteriorated area. See Sec 704.
3. 3/4" (min.) for Ultrathin Bonded Wearing Surface (UBAWS).
4. 3/8" CRS-2P Emulsified Asphalt Seal Coat.

REPAIRS TO BRIDGE: I-55 SB OVER UNION PACIFIC RR

ROUTE I-55 FROM ROUTE Z TO ROUTE A

ABOUT 0.3 MILE S. OF ROUTE Z

STA. 638+55.09± (Match Existing)

STD. 617.20
STD. 706.35

Detailed Mar. 2016
Checked Sep. 2016

Note: This drawing is not to scale. Follow dimensions.

STATE OF MISSOURI
DAVID JAMES HAGEMEYER
NUMBER PE-2007002788
PROFESSIONAL ENGINEER
THIS SHEET HAS BEEN SIGNED, SEALED AND DATED ELECTRONICALLY.

DATE PREPARED 10/3/2016
ROUTE I-55 | STATE MO
DISTRICT BR | SHEET NO. 1
COUNTY JEFFERSON
JOB NO. J6I3131
CONTRACT ID.
PROJECT NO.
BRIDGE NO. A09535

DATE	DESCRIPTION

IF A SEAL IS PRESENT ON THIS SHEET IT HAS BEEN ELECTRONICALLY SEALED AND DATED.

MISSOURI HIGHWAYS AND TRANSPORTATION COMMISSION
105 WEST CAPITOL
JEFFERSON CITY, MO 65102
1-888-ASK-MODOT (1-888-275-6636)

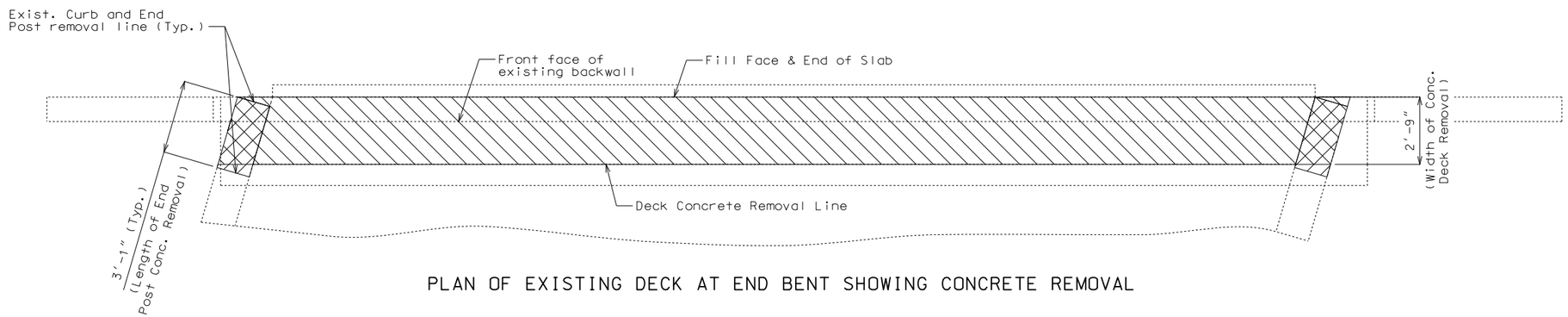

PLAN OF EXISTING DECK AT END BENT SHOWING CONCRETE REMOVAL

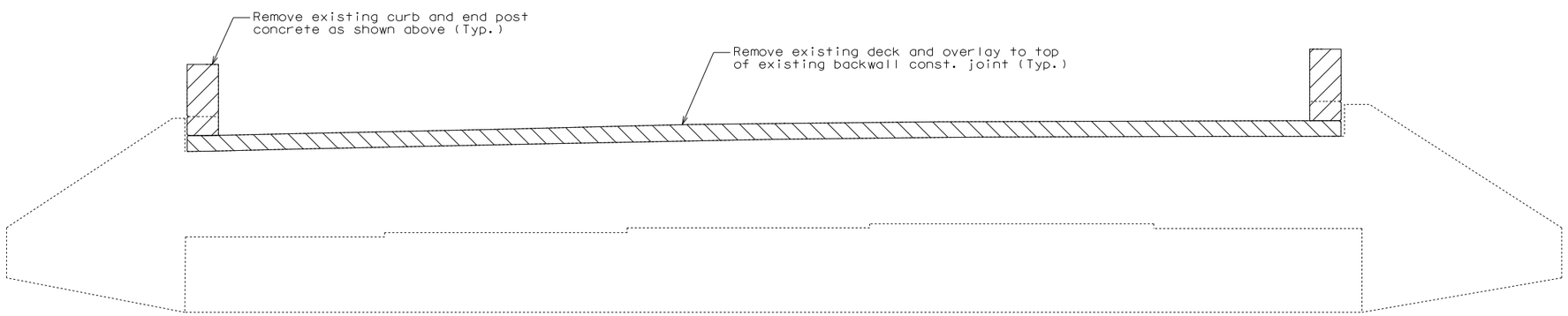

EXISTING ELEVATION OF END BENT SHOWING DECK CONCRETE REMOVAL

Notes:

The cost of bridge deck concrete removal as shown will be considered completely covered by the contract unit price for Partial Removal of Bridge Deck.

The cost of end post concrete removal as shown will be considered completely covered by the contract unit price for Remove and Replace End Post.

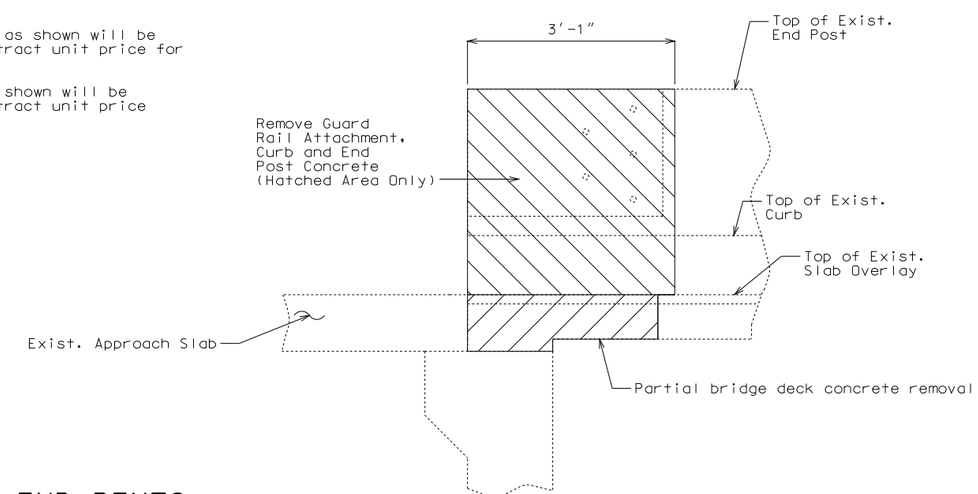

ELEVATION OF EXISTING END POST, DECK & APPROACH SLAB SHOWING CONCRETE REMOVAL

DETAILS OF CONCRETE REMOVAL AT END BENTS

(End Bent No. 4 shown, End Bent No. 1 similar)

Detailed Mar. 2016
Checked Sep. 2016

Note: This drawing is not to scale. Follow dimensions.

STATE OF MISSOURI
DAVID JAMES HAGEMEYER
NUMBER PE-2007002788
PROFESSIONAL ENGINEER

THIS SHEET HAS BEEN SIGNED, SEALED AND DATED ELECTRONICALLY.

DATE PREPARED	10/3/2016
ROUTE	I-55
STATE	MO
DISTRICT	BR
SHEET NO.	2
COUNTY	JEFFERSON
JOB NO.	J6I3131
CONTRACT ID.	
PROJECT NO.	
BRIDGE NO.	A09535

DATE	DESCRIPTION

MISSOURI HIGHWAYS AND TRANSPORTATION COMMISSION
105 WEST CAPITOL
JEFFERSON CITY, MO 65102
1-888-ASK-MODOT (1-888-275-6636)

IF A SEAL IS PRESENT ON THIS SHEET IT HAS BEEN ELECTRONICALLY SEALED AND DATED.

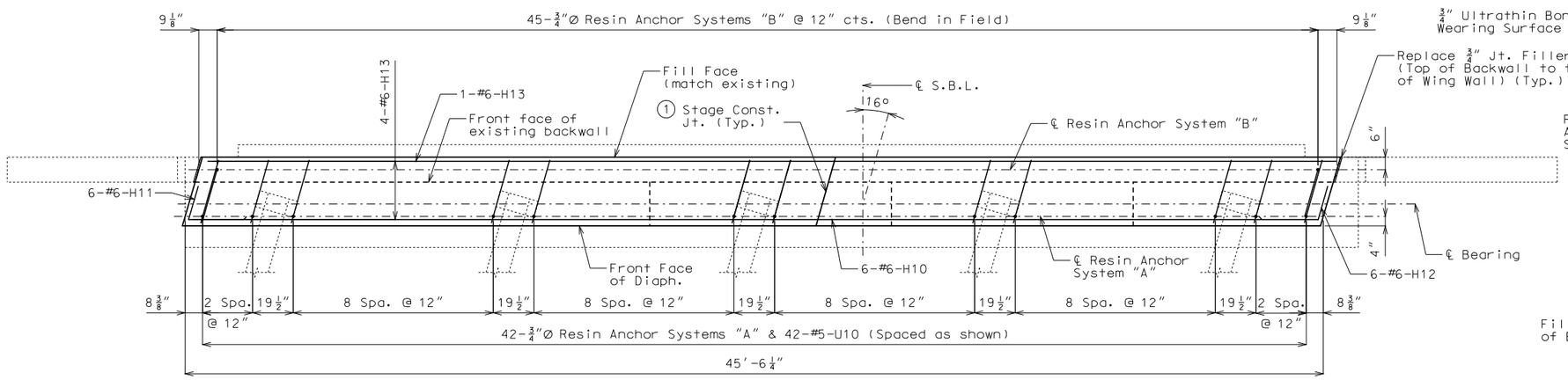

PART PLAN

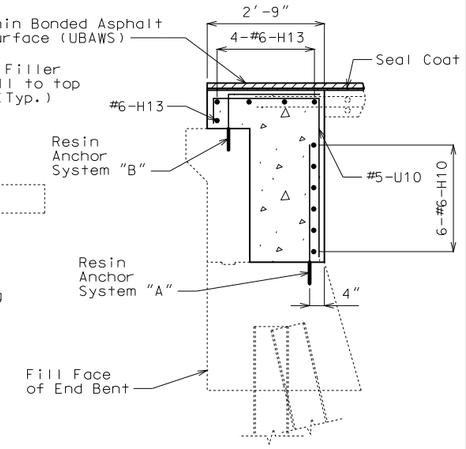

SECTION A-A

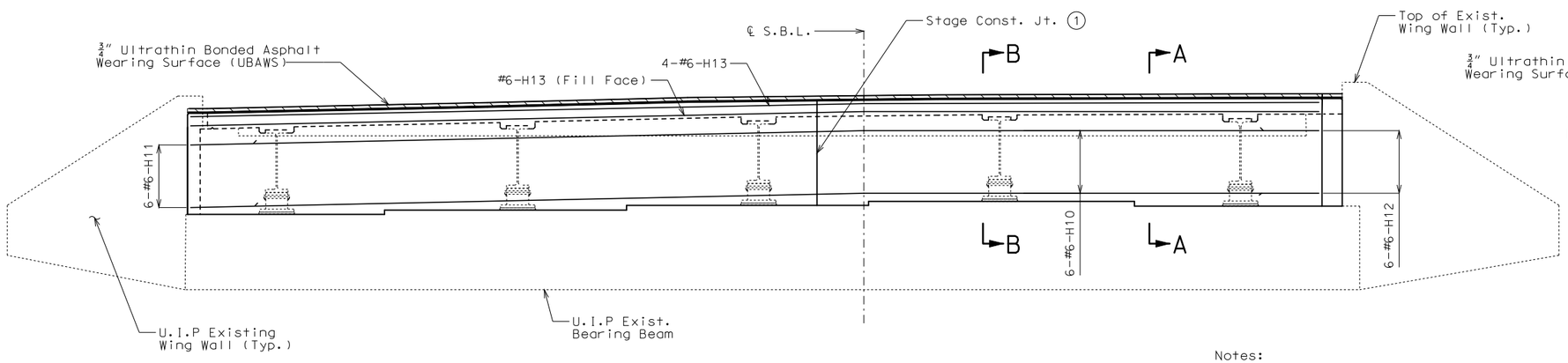

SECTION NEAR END BENT

(Resin anchor systems and #5-U10 bars not shown for clarity)

Concrete Wearing Surface and Seal Coat not shown for clarity.

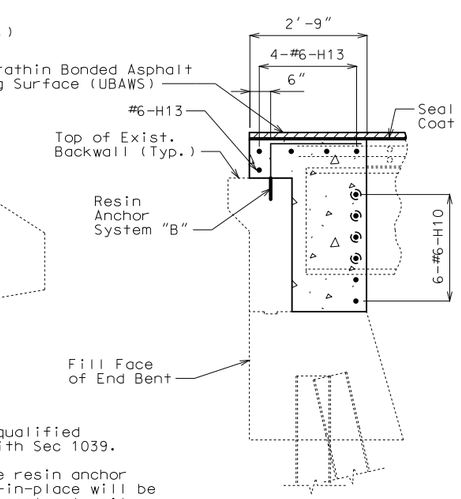

SECTION B-B

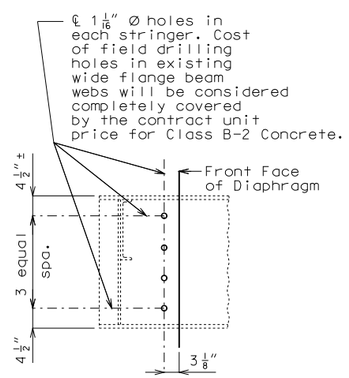

DETAIL OF WEB HOLES AT END BENTS

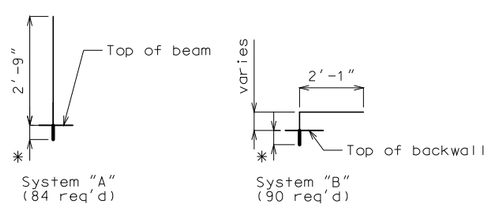

* Manufacturer's recommended embedment length (5" min.)

DETAILS OF RESIN ANCHOR SYSTEMS

1 Stage Const. Jt. location to be determined by the contractor with the approval of the Engineer.

DETAILS OF END BENTS

(End Bent No. 4 shown, End Bent No. 1 similar)

Notes:

The contractor shall use one of the qualified resin anchor systems in accordance with Sec 1039.

Cost of furnishing and installing the resin anchor systems shown on this sheet complete-in-place will be considered completely covered by the contract unit price for Class B-2 Concrete.

The minimum embedment depth in concrete with f'c = 4,000 psi for the resin anchor system shall be that required to meet the minimum ultimate pullout strength in accordance with Sec 1039 but shall not be less than 5".

An epoxy coated #6 Grade 60 reinforcing bar shall be substituted for the 3/4"Ø threaded rod.

The exposed and accessible surfaces of the existing structural steel and bearings that will be encased in concrete shall be cleaned with a minimum of SSPC-SP-2 surface preparation before concrete is poured. Payment for cleaning steel to be encased in concrete will be considered completely covered by the contract unit price for Class B-2 Concrete.

Slab concrete removal at end bents necessary to make the end bents integral will be considered completely covered by the contract unit price for Partial Removal of Existing Bridge Deck.

The #6-H10 & #6-H13 bars to be segmented to accommodate stage construction. The total bar length for #6-H10 & #6-H13 bars shown in Bill of Reinforcing Steel allows for one lap splice with a length of 3'-6". Actual bar segment lengths to be determined by contractor. The contractor may use a mechanical bar splice in lieu of a lap splice. When a mechanical bar splice is used, the actual bar segment length will be determined by the contractor to accommodate manufacturer's recommendations for installation and stage construction. The cost of furnishing and installing the bar splices will be considered completely covered by the contract unit price for Reinforcing Steel. No adjustment of the quantity of reinforcing steel will be allowed for the use of mechanical bar splices.

Detailed Mar. 2016
Checked Sep. 2016

Note: This drawing is not to scale. Follow dimensions.

STATE OF MISSOURI
DAVID JAMES HAGEMEYER
NUMBER PE-2007002788
PROFESSIONAL ENGINEER
THIS SHEET HAS BEEN SIGNED, SEALED AND DATED ELECTRONICALLY.

DATE PREPARED	
10/3/2016	
ROUTE	STATE
I-55	MO
DISTRICT	SHEET NO.
BR	2
COUNTY	
JEFFERSON	
JOB NO.	
J6I3131	
CONTRACT ID.	
PROJECT NO.	
BRIDGE NO.	
A09535	

DATE	DESCRIPTION

IF A SEAL IS PRESENT ON THIS SHEET IT HAS BEEN ELECTRONICALLY SEALED AND DATED.

MISSOURI HIGHWAYS AND TRANSPORTATION COMMISSION
105 WEST CAPITOL
JEFFERSON CITY, MO 65102
1-888-ASK-MODOT (1-888-275-6636)

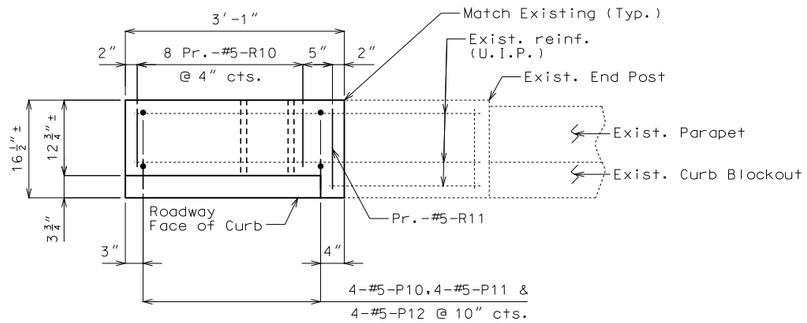

PLAN SHOWING NEW END POST REINFORCEMENT

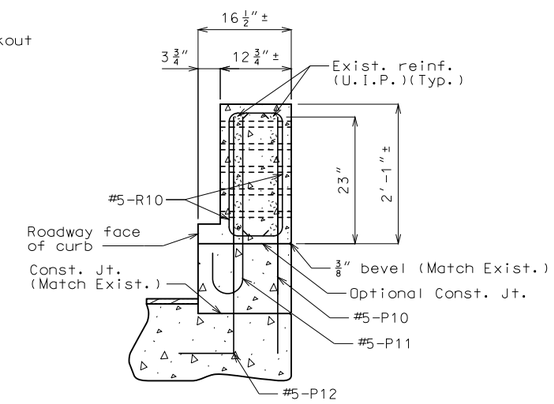

SECTION A-A

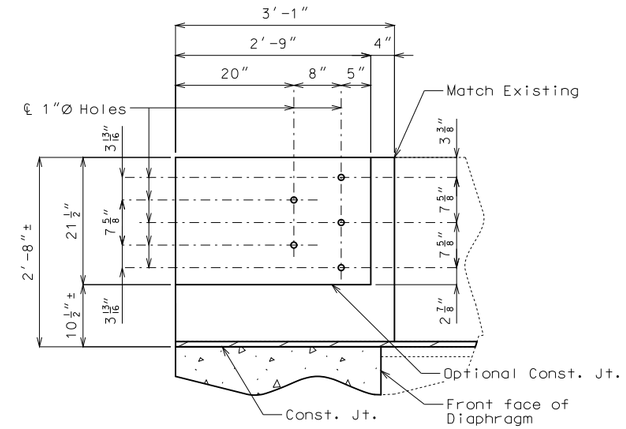

DETAILS OF NEW GUARD RAIL ATTACHMENT

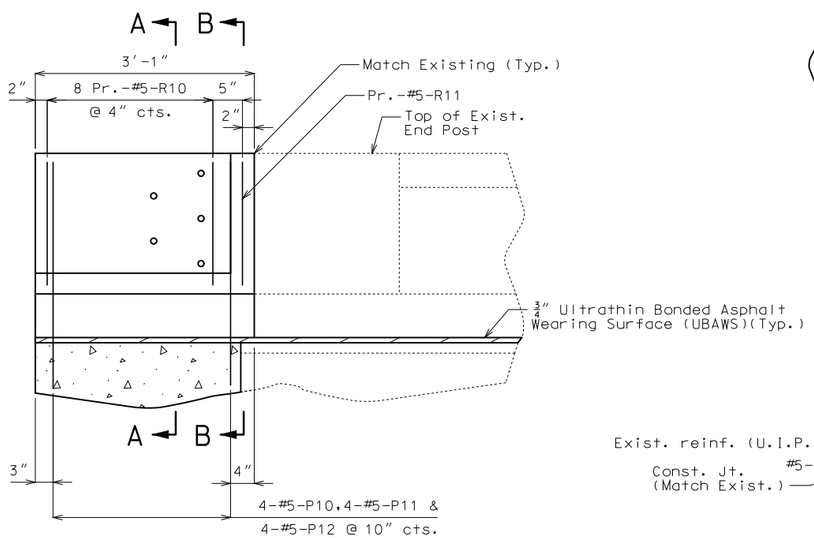

ELEVATION SHOWING NEW END POST REINFORCEMENT

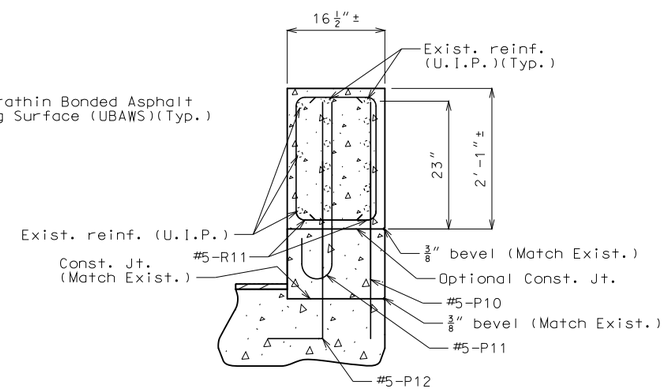

SECTION B-B

Notes:

Payment for all concrete and reinforcement for end post, complete-in-place, will be considered completely covered by the contract unit price for Remove and Replace End Post.

All exposed edges of the new end post shall match existing end post.

All concrete for end post shall be Class B-1.

DETAILS OF END POST AT END BENTS NO. 1 & NO. 4

Detailed Mar. 2016
Checked Sep. 2016

Note: This drawing is not to scale. Follow dimensions.

STATE OF MISSOURI
DAVID JAMES HAGEMEYER
NUMBER PE-2007002788
PROFESSIONAL ENGINEER

THIS SHEET HAS BEEN SIGNED, SEALED AND DATED ELECTRONICALLY.

DATE PREPARED	
10/3/2016	
ROUTE	STATE
I-55	MO
DISTRICT	SHEET NO.
BR	4
COUNTY	
JEFFERSON	
JOB NO.	
J6I3131	
CONTRACT ID.	
PROJECT NO.	
BRIDGE NO.	
A09535	

DATE	DESCRIPTION

MISSOURI HIGHWAYS AND TRANSPORTATION COMMISSION
105 WEST CAPITOL
JEFFERSON CITY, MO 65102
1-888-ASK-MODOT (1-888-275-6636)

IF A SEAL IS PRESENT ON THIS SHEET IT HAS BEEN ELECTRONICALLY SEALED AND DATED.

REV.

BILL OF REINFORCING STEEL

NO. REQ'D.	MARK NO. SIZE	MARK NO. MARK	LOCATION	EPOXY (E)	SHAPE NO.	STIRRUP (S)	SUBSTR. (X)	VARIES (V)	NO. EACH	B FT. IN.	C FT. IN.	D FT. IN.	E FT. IN.	F FT. IN.	H FT. IN.	K FT. IN.	NOMINAL LENGTH FT. IN.	ACTUAL LENGTH FT. IN.	WEIGHT LBS.
			DIAPHRAGM																
12	6	H10	DIAPHRAGM	E	20					48 9.000							48 9	48 9	879
12	6	H11	DIAPHRAGM	E	21	S				17.250	2 5.000				16.625	4.625	3 10	3 7	65
12	6	H12	DIAPHRAGM	E	23	S				17.250	2 5.000				16.625	4.625	3 10	3 9	68
10	6	H13	DIAPHRAGM	E	20					48 9.000							48 9	48 9	732
84	5	U10	DIAPHRAGM	E	11	S					3 8.000	2 7.375	7.000				6 10	6 8	584
			END POST																
16	5	P10	END POST	E	20					3 2.000							3 2	3 2	53
16	5	P11	END POST	E	17					2 7.000							3 2	3 2	53
16	5	P12	END POST	E	19	S				3 2.000	12.000						4 2	4 1	68
64	5	R10	END POST	E	10	S					9.750	22.000					3 6	3 3	217
8	5	R11	END POST	E	10	S					13.500	22.000					4 1	3 11	33
			TOTALS																
	5			E															1008
	6			E															1744
			TOTAL																0
			TOTAL	E															2752
			Slab on Girder																
	5			E															1008
	6			E															1744
			TOTAL																2752

BILL OF REINFORCING STEEL

NO. REQ'D.	MARK NO. SIZE	MARK NO. MARK	LOCATION	EPOXY (E)	SHAPE NO.	STIRRUP (S)	SUBSTR. (X)	VARIES (V)	NO. EACH	B FT. IN.	C FT. IN.	D FT. IN.	E FT. IN.	F FT. IN.	H FT. IN.	K FT. IN.	NOMINAL LENGTH FT. IN.	ACTUAL LENGTH FT. IN.	WEIGHT LBS.

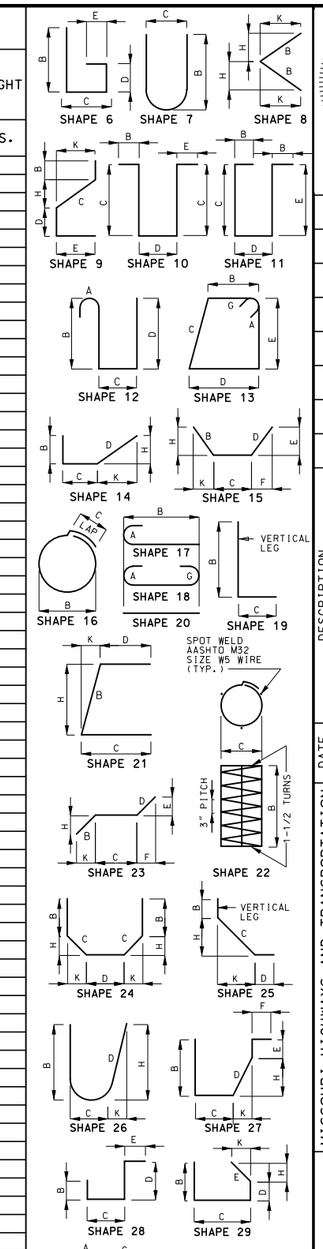

STATE OF MISSOURI
DAVID JAMES HAGEMEYER
NUMBER PE-2007002788
PROFESSIONAL ENGINEER

THIS SHEET HAS BEEN SIGNED, SEALED AND DATED ELECTRONICALLY.

DATE PREPARED	
10/3/2016	
ROUTE	STATE
I-55	MO
DISTRICT	SHEET NO.
BR	5
COUNTY	
JEFFERSON	
JOB NO.	
J6I3131	
CONTRACT ID.	
PROJECT NO.	
BRIDGE NO.	
A09535	

DESCRIPTION

DATE

MISSOURI HIGHWAYS AND TRANSPORTATION COMMISSION

105 WEST CAPITOL
JEFFERSON CITY, MO 65102
1-888-ASK-MODOT (1-888-275-6636)

IF A SEAL IS PRESENT ON THIS SHEET IT HAS BEEN ELECTRONICALLY SEALED AND DATED.

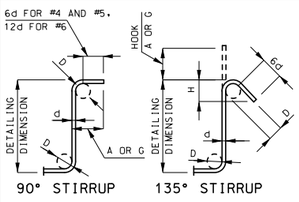

STIRRUP HOOK DIMENSIONS				
GRADES 40 - 50 - 60 KSI				
BAR SIZE	D (IN.)	90° HOOK	135° HOOK	
		HOOK A OR G	HOOK A OR G	APPROX. H
#4	2"	4 1/2"	4 1/2"	3"
#5	2 1/2"	6"	5 1/2"	3 3/4"
#6	4 1/2"	12"	8"	4 1/2"

NOTE: UNLESS OTHERWISE NOTED, DIAMETER "D" IS THE SAME FOR ALL BENDS AND HOOKS ON A BAR.

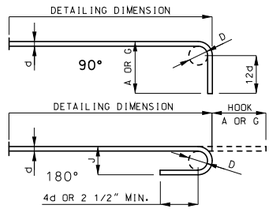

END HOOK DIMENSIONS				
BAR SIZE	D (IN.)	ALL GRADES		
		180° HOOKS		90° HOOKS
		A OR G	J	A OR G
#3	2 1/4"	5"	3"	6"
#4	3"	6"	4"	8"
#5	3 3/4"	7"	5"	10"
#6	4 1/2"	8"	6"	12"
#7	5 1/4"	10"	7"	14"
#8	6"	11"	8"	16"
#9	9 1/2"	15"	11 3/4"	19"
#10	10 3/4"	17"	13 1/4"	22"
#11	12"	19"	14 3/4"	2'-0"
#14	18 1/4"	2'-3"	21 3/4"	2'-7"

NOTE:
ALL STANDARD HOOKS AND BENDS OTHER THAN 180 DEGREE ARE TO BE BENT WITH SAME PROCEDURE AS FOR 90 DEGREE STANDARD HOOKS.
HOOKS AND BENDS SHALL BE IN ACCORDANCE WITH THE PROCEDURES AS SHOWN ON THIS SHEET.
E = EPOXY COATED REINFORCEMENT.
S = STIRRUP.
X = BAR IS INCLUDED IN SUBSTRUCTURE QUANTITIES.
V = BAR DIMENSIONS VARY IN EQUAL INCREMENTS BETWEEN DIMENSIONS SHOWN ON THIS LINE AND THE FOLLOWING LINE.
NO. EA. = NUMBER OF BARS OF EACH LENGTH.
NOMINAL LENGTHS ARE BASED ON OUT TO OUT DIMENSIONS SHOWN IN BENDING DIAGRAMS AND ARE LISTED FOR FABRICATORS USE. (NEAREST INCH)
ACTUAL LENGTHS ARE MEASURED ALONG CENTERLINE BAR TO THE NEAREST INCH.
PAYWEIGHTS ARE BASED ON ACTUAL LENGTHS.
FOUR ANGLE OR CHANNEL SPACERS ARE REQUIRED FOR EACH COLUMN SPIRAL. SPACERS ARE TO BE PLACED ON INSIDE OF SPIRALS. LENGTH AND WEIGHT OF COLUMN SPIRALS DO NOT INCLUDE SPLICES OR SPACERS.
REINFORCING STEEL (GRADE 60) FY = 60,000 PSI.

Detailed Aug. 2016
Checked Sep. 2016

Note: This drawing is not to scale. Follow dimensions.

U.I.P. AND REHAB EXISTING (83'-104'-83') CONTINUOUS COMPOSITE PLATE GIRDER SPANS (57° 17' 00" RA)

SEC/SUR 420 TWP 41N RGE 6E

General Notes:

Design Specifications:
2002 AASHTO LFD (17th Ed.) Standard Specifications
Load Factor Design
Bridge Deck Rating = 7

Design Loading:
HS20-44 and Modified 24,000 lb Tandem Axle
(1961 & New Construction)

Design Unit Stresses:
Class B-1 Concrete (Curb and Blockout) f'c = 4,000 psi
Class B-2 Concrete (Slab) f'c = 4,000 psi
Reinforcing Steel (Grade 60) fy = 60,000 psi

Miscellaneous:
Protective coating for concrete bents and piers (Urethane) shall be applied as shown on the bridge plans and in accordance with Sec 711.

In order to maintain grade and a minimum thickness of overlay as shown on plans it may be necessary to use additional quantities of overlay at various locations throughout the structure. The cost of furnishing and installing the overlay will be considered completely covered in the contract unit price, including all additional labor, materials or equipment for variations in thickness of overlay.

Roadway surfacing adjacent to bridge overlay ends shall match bridge overlay (Roadway Item).

Outline of old work is indicated by light dashed lines. Heavy lines indicate new work.

Contractor shall verify all dimensions in field before ordering new material.

Contractor shall remove all asphalt overlay to existing concrete substrate.

High strength bolts, nuts and washers will be sampled for quality assurance as specified in Sec 106.

Traffic Handling:
Traffic to be maintained on structure during construction. See Roadway Plans for traffic control.

Structural Steel Protective Coating:
Protective Coating: System G in accordance with Sec 1081.

Coating Limits: All new steel and all existing structural steel within 10 feet of ends of girders at End Bents No. 1 & 4. Within these limits, items to be recoated shall include girders, diaphragms, stiffeners, bearings and miscellaneous structural steel items.

Surface Preparation: Surface preparation of the existing steel shall be in accordance with Sec 1081 for "Recoating of Structural Steel (System G, H or I)". The cost of surface preparation will be considered completely covered by the contract unit price per sq. foot for "Surface Preparation for Recoating Structural Steel".

Prime Coat: The cost of the prime coat on existing structural steel will be considered completely covered by the contract unit price per sq. foot for "Field Application of Inorganic Zinc Primer". The cost of prime coat on new structural steel will be considered completely covered by contract unit price for "Fabricated Structural Carbon Steel". Tint of the prime coat for System G shall be similar to the color of the field coat to be used.

Field Coat: The color of the finish field coat shall be Gray (Federal Standard #26373). The cost of the intermediate field coat will be considered completely covered by the contract unit price per sq. foot for "Intermediate Field Coat (System G)". The cost of the finish field coat will be considered completely covered by the contract unit price per sq. foot for "Finish Field Coat (System G)".

Sec 1081.4.5 shall be modified such that the word "RECOATED" is replaced by the word "RECOATED - SYSTEM G - EXPANSION AREAS ONLY".

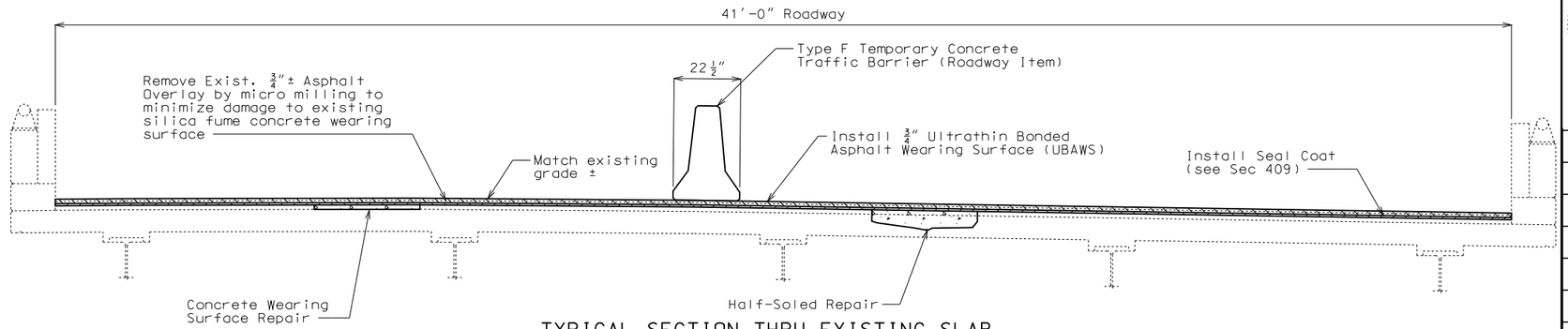

TYPICAL SECTION THRU EXISTING SLAB

Estimated Quantities

	Item		Total
✱✱	Removal of Asphalt Wearing Surface	sq. foot	11,392
	Removal of Existing Expansion Joint & Adjacent Concrete	linear foot	152
✱	Removal of Existing Bearings	each	10
	Remove and Replace Curb & Blockout	linear foot	28
	CRS-2P Emulsified Asphalt, Seal Coat	gal.	510
	Seal Coat Aggregate, Grade B1	sq. yard	1266
	Ultrathin Bonded Asphalt Wearing Surface (UBAWS), Grade C	sq. yard	1266
	Class B-2 Concrete	cu. yard	12.4
	Repairing Concrete Deck (Half-Soling)	sq. foot	250
	Concrete Wearing Surface Repair	sq. foot	250
	Reinforcing Steel (Epoxy Coated)	pound	1600
	Fabricated Structural Carbon Steel (Misc.)	pound	780
	Protective Coating - Concrete Bents and Piers (Urethane)	lump sum	1
	Surface Preparation for Recoating Structural Steel	sq. foot	1100
	Field Application of Inorganic Zinc Primer (System G)	sq. foot	1100
	Intermediate Field Coat System (System G)	sq. foot	1100
	Finish Field Coat (System G)	sq. foot	1100
✱	Laminated Neoprene Bearing Pad Assembly	each	10
	Strip Seal Expansion Joint System	linear foot	152

✱ Removal of Existing Bearings and installation of Laminated Neoprene Bearing Pad Assemblies shall be performed before Removal of Existing Expansion Joint & Adjacent Concrete.

✱✱ Removal of Asphalt Wearing Surface shall be performed after installation of Strip Seal Expansion Joint System.

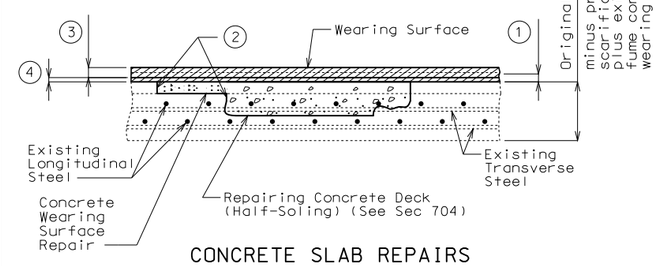

CONCRETE SLAB REPAIRS

1. Remove existing asphalt overlay by micro milling.
2. One inch vertical side shall be established outside the deteriorated area. See Sec 704.
3. 3/4" (min.) for Ultrathin Bonded Wearing Surface (UBAWS).
4. 3/8" CRS-2P Emulsified Asphalt Seal Coat.

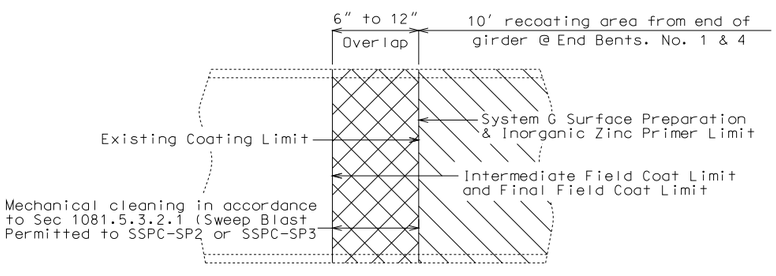

PART ELEVATION SHOWING LIMITS OF PAINT OVERLAP NEAR BENTS NO. 1 & 4

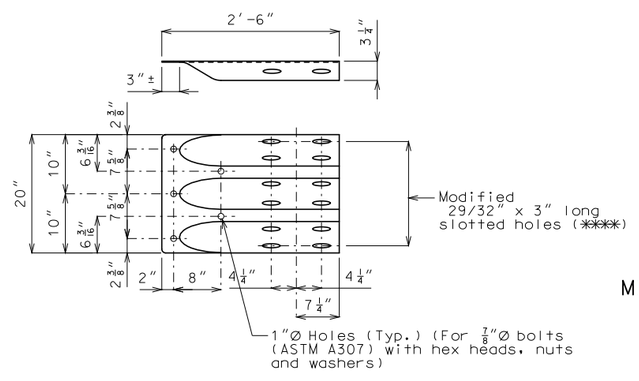

✱✱✱✱ Tighten bolts, back off 1/2 turn and burr threads Allow for sliding between Modified Bridge Anchor Section (Thrie Beam) and End Post

MODIFIED TERMINAL CONNECTION AT END BENTS (ROADWAY ITEM)

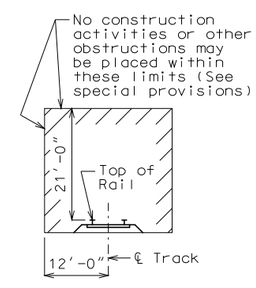

MINIMUM CONSTRUCTION CLEARANCES
(Normal to railroad)
(Not to scale)

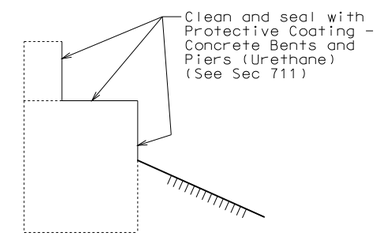

TYPICAL SECTION THRU END BENTS 1 & 4 SHOWING PROTECTIVE COATING

REPAIRS TO BRIDGE: I-55 SB OVER OVER BNSF RAILROAD

ROUTE I-55 SB FROM ROUTE M TO ROUTE Z

ABOUT 0.3 MILE N. OF ROUTE Z

STA. 607+18.00± (Match Existing)

STD. 606.22
STD. 617.20
STD. 706.35

Detailed Aug. 2016
Checked Aug. 2016

Note: This drawing is not to scale. Follow dimensions.

STATE OF MISSOURI
DAVID JAMES HAGEMEYER
NUMBER PE-2007002788
PROFESSIONAL ENGINEER
THIS SHEET HAS BEEN SIGNED, SEALED AND DATED ELECTRONICALLY.

DATE PREPARED 10/28/2016
ROUTE I-55 | STATE MO
DISTRICT BR | SHEET NO. 1
COUNTY JEFFERSON
JOB NO. J6I3131
CONTRACT ID.
PROJECT NO.
BRIDGE NO. A10354

DATE	DESCRIPTION

MISSOURI HIGHWAYS AND TRANSPORTATION COMMISSION
105 WEST CAPITOL
JEFFERSON CITY, MO 65102
1-888-ASK-MODOT (1-888-275-6636)

IF A SEAL IS PRESENT ON THIS SHEET IT HAS BEEN ELECTRONICALLY SEALED AND DATED.

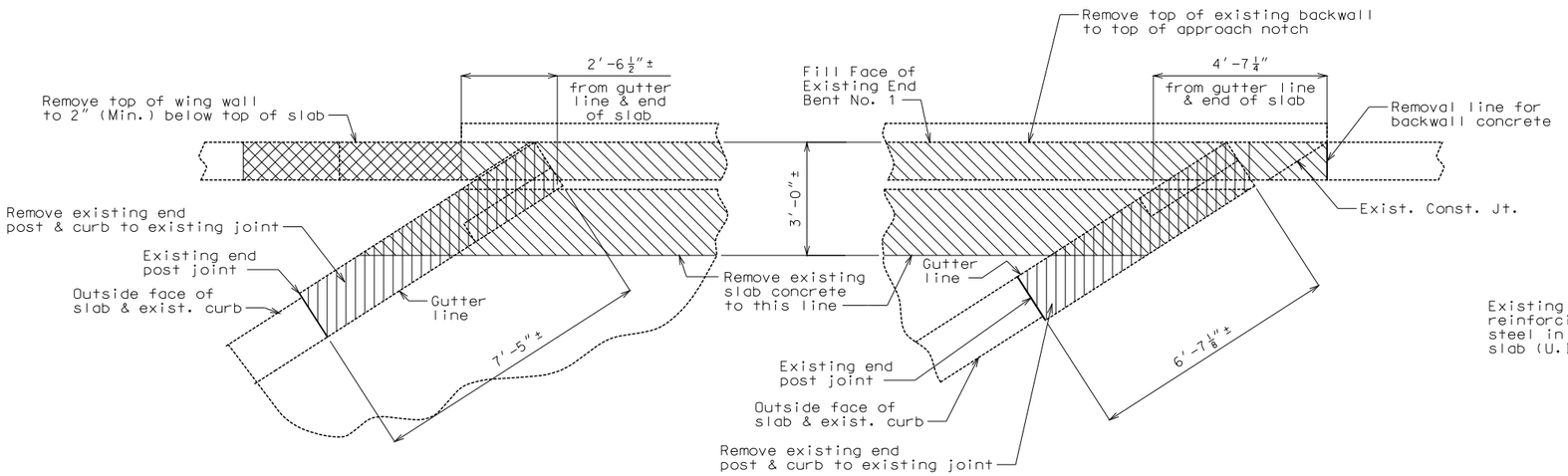

PART PLAN

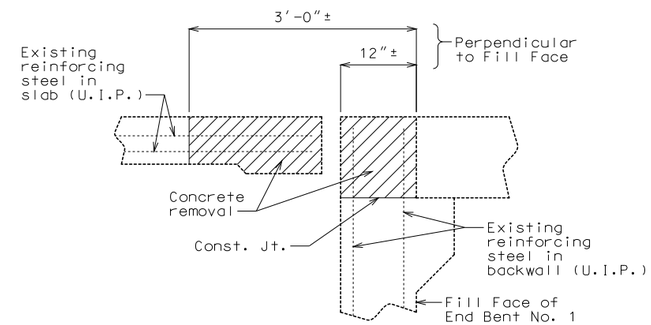

PART SECTION THRU SLAB AND END BENT NO. 1 SHOWING CONCRETE TO BE REMOVED

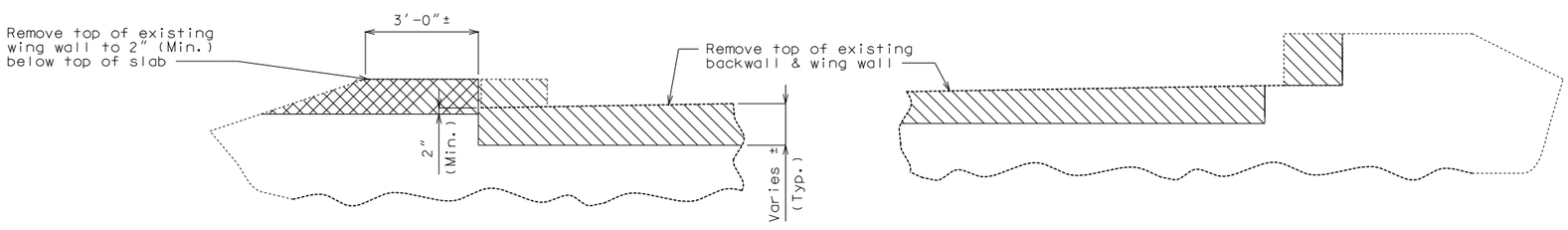

PART ELEVATION

Notes:
The cost of backwall, wing wall and slab concrete removal as shown will be considered completely covered by the contract unit price for Removal of Existing Expansion Joints & Adjacent Concrete.

The area exposed by the removal of concrete and not covered with new concrete shall be coated with an approved qualified special mortar in accordance with Sec 704.

Existing reinforcement not embedded in new concrete is to be cut off one inch into the existing concrete at the removal surface and the resulting holes shall be filled with an approved qualified special mortar.

Work this sheet with Sheets No. 6, 8, & 10.

CONCRETE REMOVAL AT END BENT NO. 1 FOR EXPANSION DEVICE REPLACEMENT

Note: This drawing is not to scale. Follow dimensions.

Detailed Aug. 2016
Checked Aug. 2016

STATE OF MISSOURI
DAVID JAMES HAGEMEYER
NUMBER PE-2007002788
PROFESSIONAL ENGINEER
THIS SHEET HAS BEEN SIGNED, SEALED AND DATED ELECTRONICALLY.

DATE PREPARED 10/6/2016

ROUTE	STATE
I-55	MO
DISTRICT	SHEET NO.
BR	2

COUNTY: JEFFERSON
JOB NO.: J6I3131
CONTRACT ID.:
PROJECT NO.:
BRIDGE NO.: A10354

DATE	DESCRIPTION

MISSOURI HIGHWAYS AND TRANSPORTATION COMMISSION
105 WEST CAPITOL
JEFFERSON CITY, MO 65102
1-888-ASK-MODOT (1-888-275-6636)

IF A SEAL IS PRESENT ON THIS SHEET IT HAS BEEN ELECTRONICALLY SEALED AND DATED.

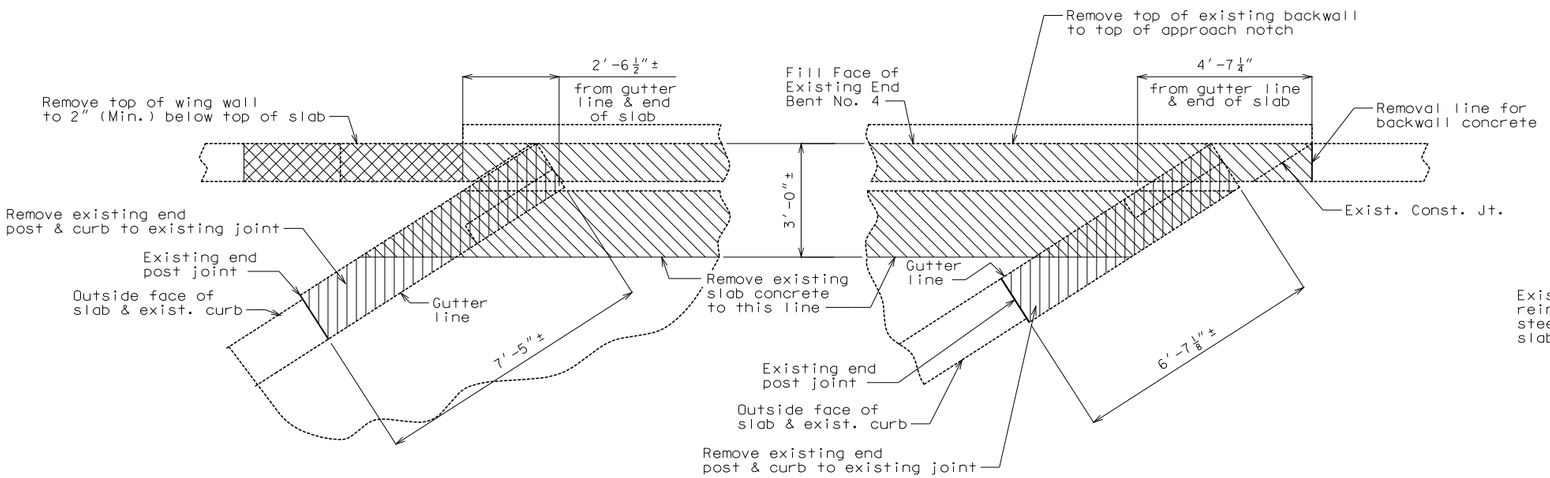

PART PLAN

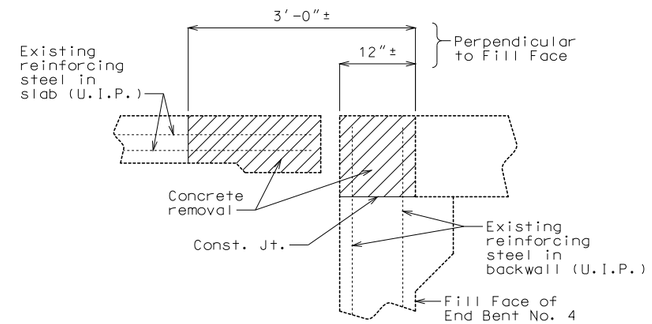

PART SECTION THRU SLAB AND END BENT NO. 4 SHOWING CONCRETE TO BE REMOVED

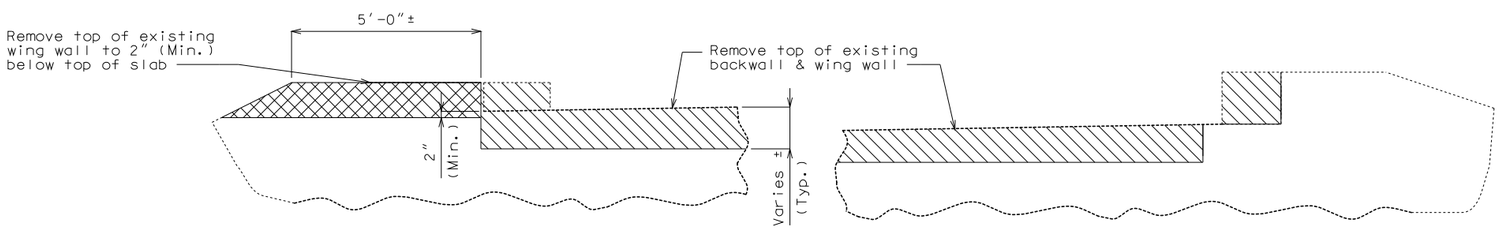

PART ELEVATION

Notes:
The cost of backwall, wing wall and slab concrete removal as shown will be considered completely covered by the contract unit price for Removal of Existing Expansion Joints & Adjacent Concrete.

The area exposed by the removal of concrete and not covered with new concrete shall be coated with an approved qualified special mortar in accordance with Sec 704.

Existing reinforcement not embedded in new concrete is to be cut off one inch into the existing concrete at the removal surface and the resulting holes shall be filled with an approved qualified special mortar.

Work this sheet with Sheets No. 7, 9, & 11.

CONCRETE REMOVAL AT END BENT NO. 4 FOR EXPANSION DEVICE REPLACEMENT

Detailed Aug. 2016
Checked Aug. 2016

Note: This drawing is not to scale. Follow dimensions.

STATE OF MISSOURI
DAVID JAMES HAGEMEYER
NUMBER PE-2007002788
PROFESSIONAL ENGINEER

THIS SHEET HAS BEEN SIGNED, SEALED AND DATED ELECTRONICALLY.

DATE PREPARED	
10/6/2016	
ROUTE I-55	STATE MO
DISTRICT BR	SHEET NO. 3
COUNTY JEFFERSON	
JOB NO. J6I3131	
CONTRACT ID.	
PROJECT NO.	
BRIDGE NO. A10354	

DATE	DESCRIPTION

MISSOURI HIGHWAYS AND TRANSPORTATION COMMISSION
105 WEST CAPITOL
JEFFERSON CITY, MO 65102
1-888-ASK-MODOT (1-888-275-6636)

IF A SEAL IS PRESENT ON THIS SHEET IT HAS BEEN ELECTRONICALLY SEALED AND DATED.

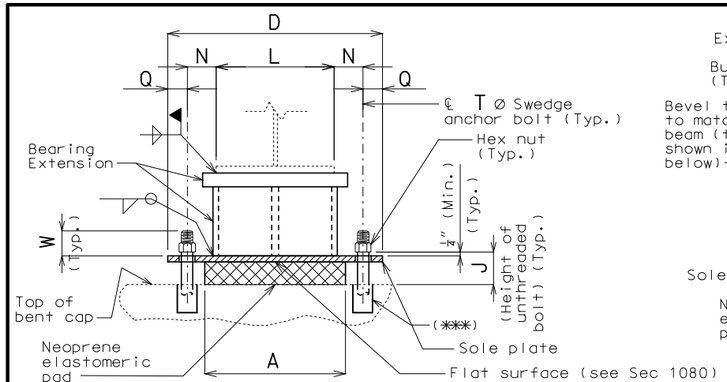

END VIEW

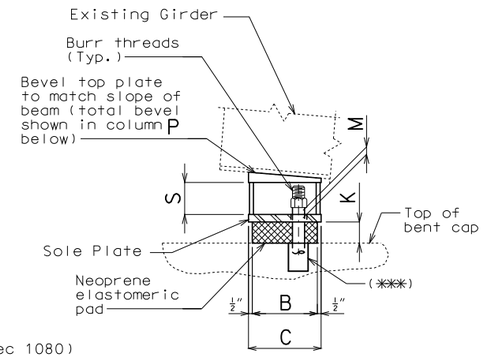

SIDE VIEW

(✱✱✱) Anchor bolt well and grout new anchor rod in place (see Sec 712).

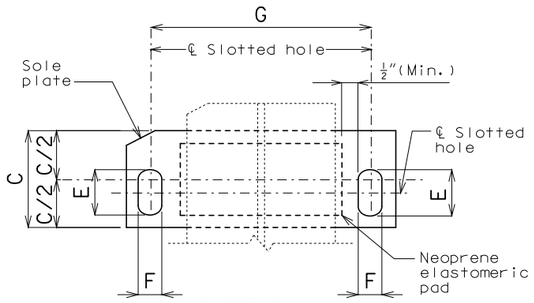

PART PLAN

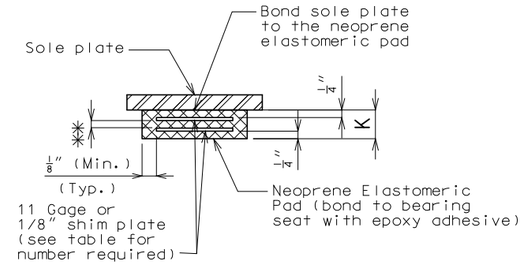

✱✱ Layers of 1/2" elastomer alternating with 11 gage or 1/8" shim plate

NEOPRENE ELASTOMERIC PAD

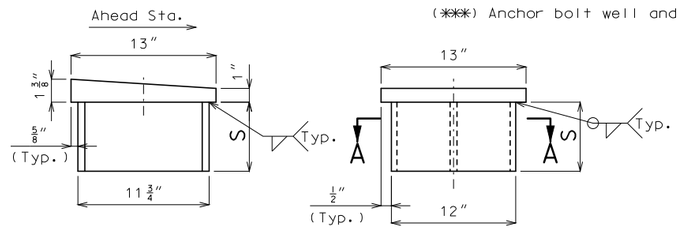

SIDE ELEVATION OF BEARING EXTENSION

END ELEVATION OF BEARING EXTENSION

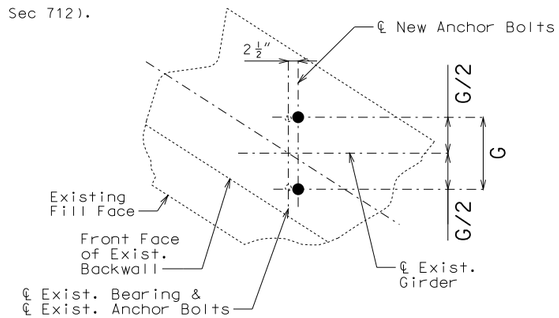

PART PLAN OF EXISTING END BENT NO. 1 SHOWING ℄ BEARING

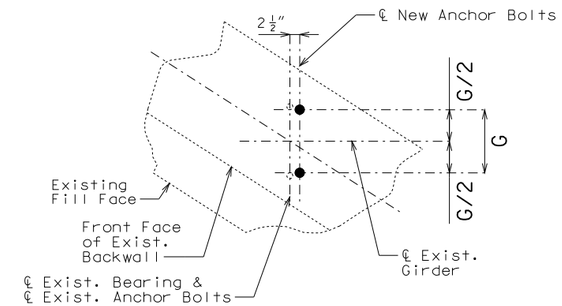

PART PLAN OF EXISTING END BENT NO. 4 SHOWING ℄ BEARING

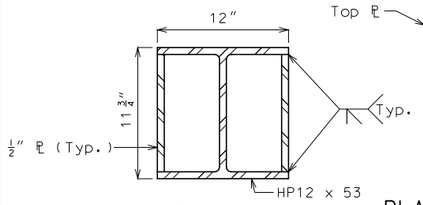

SECTION A-A

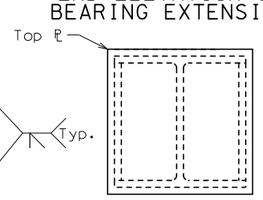

PLAN OF BEARING EXTENSION

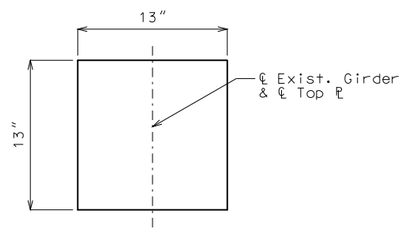

PLAN OF TOP PLATE

EXPANSION BEARINGS																						
BENT NO.	A	B	C	D	E	F	G	J	K	L	M	N	P	Q	R	S	T	U	V	W	NUMBER OF SHIM PLATES(✱)	NUMBER REQUIRED
1	15"	15"	16"	24 1/4"	5 3/4"	2 1/8"	18 1/4"	8"	6 1/4"	12"	1 1/2"	3 1/8"	3/8"	3"	1/8"	2 5/16"	2"	18"	3"	2 1/2"	10	5
4	12"	12"	13"	20 1/2"	4"	1 5/8"	16"	4 7/8"	3 1/8"	12"	1 1/2"	2"	3/8"	2 1/4"	1/16"	5 7/16"	1 1/2"	15"	2 1/2"	2 1/4"	5	5
																					TOTAL BEARINGS	10

(✱) The required shim plate shall be placed between layers of elastomer and molded together to form an integral unit.

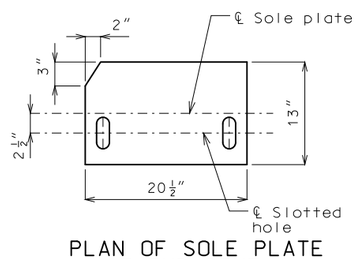

PLAN OF SOLE PLATE AT END BENT 4

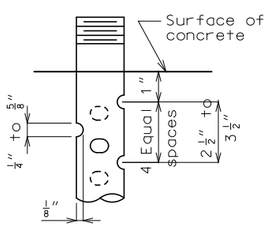

DETAIL OF 3/4"Ø THRU 2 1/2"Ø ANCHOR BOLTS

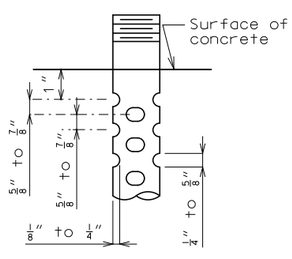

OPTIONAL DETAIL OF 1 3/8"Ø THRU 2 1/2"Ø ANCHOR BOLTS

SWEDGE ANCHOR BOLT DETAILS

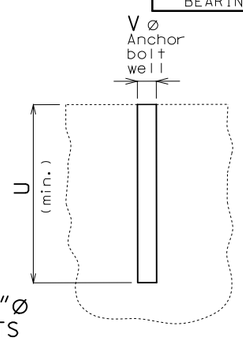

DETAIL OF ANCHOR BOLT WELLS

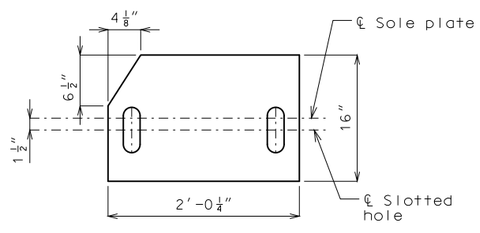

PLAN OF SOLE PLATE AT END BENT 1

GENERAL NOTES:

Payment for removing existing steel rocker bearings and anchor bolts will be considered completely covered by the contract unit price for Removal of Existing Bearings.

Existing anchor bolts shall be cut off to 1" below top of beam cap and the resulting holes filled with an approved qualified special mortar.

Anchor bolts shall be T Ø ASTM F1554 Grade 55 swedged bolts and shall extend U into the concrete with ASTM A563 Grade A Hex or Heavy Hex nuts. Actual manufacturer's certified mill test reports(chemical and mechanical) shall be provided. Swedging shall be 1" less than extension into the concrete.

Anchor bolt shall be at the ℄ of slotted hole at 60°F. Bearing position shall be adjusted R for each 10° fall or rise in temperature at installation.

All structural steel for the anchor bolts and heavy hexagon nuts shall be coated with a minimum of two coats of inorganic zinc primer (5 mils minimum).

Neoprene Elastomeric Pads shall be 60 Durometer.

Structural steel for sole plate and bearing extension shall be ASTM A709 Grade 50 and shall be coated with a minimum of two coats of inorganic zinc primer (5 mils minimum).

Laminated Neoprene Bearing Pad Assembly shall be in accordance with Sec 716.

Cost of anchor bolts, drilling, grouting and all bearing extension plates and HP shapes, complete in place, will be considered completely covered by the contract unit price for Laminated Neoprene Bearing Pad Assembly.

Contractor shall provide adequate temporary supports and temporary (or permanent) bearing stiffeners at jacking points for replacing bearings. The temporary supports shall be capable of safely supporting a service load DL & construction load of 63 kips and a LL of 53 kips per stringer if done under traffic (factor of safety not included) See Special Provisions.

DETAILS OF LAMINATED NEOPRENE BEARING PAD ASSEMBLY

Detailed Aug. 2016
Checked Aug. 2016

Note: This drawing is not to scale. Follow dimensions.

STATE OF MISSOURI
DAVID JAMES HAGEMEYER
NUMBER PE-2007002788
PROFESSIONAL ENGINEER
THIS SHEET HAS BEEN SIGNED, SEALED AND DATED ELECTRONICALLY.

DATE PREPARED	
10/6/2016	
ROUTE I-55	STATE MO
DISTRICT BR	SHEET NO. 4
COUNTY JEFFERSON	
JOB NO. J6I3131	
CONTRACT ID.	
PROJECT NO.	
BRIDGE NO. A10354	

DATE	DESCRIPTION

IF A SEAL IS PRESENT ON THIS SHEET IT HAS BEEN ELECTRONICALLY SEALED AND DATED.

MISSOURI HIGHWAYS AND TRANSPORTATION COMMISSION
105 WEST CAPITOL
JEFFERSON CITY, MO 65102
1-888-ASK-MODOT (1-888-275-6636)

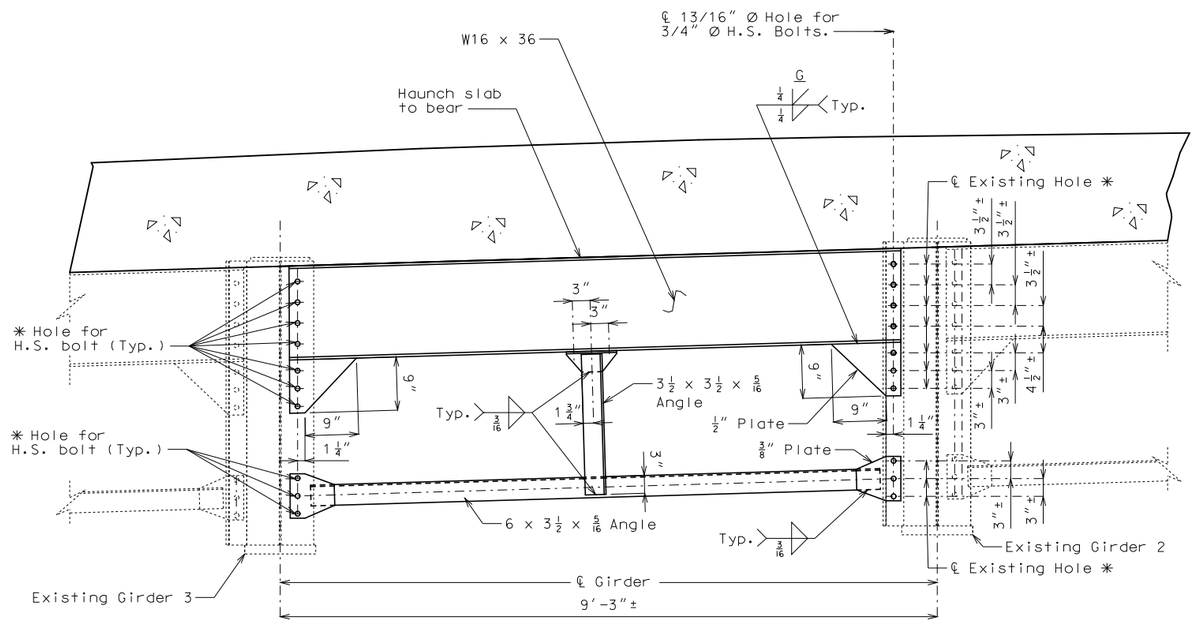

✳ Match Existing Holes

The contractor shall verify all dimensions in the field and on the existing shop drawings before fabricating new diaphragms.

TYPICAL PART SECTION SHOWING
END DIAPHRAGM BETWEEN GIRDERS
2 & 3 NEAR END BENT NO. 1

Notes:

All fabricated structural steel for "End Diaphragm" shall be ASTM A709 Grade 36.

Cost of work and material to complete this item will be considered completely covered by the contract unit price for Fabricated Structural Carbon Steel (Misc.).

For details of Strip Seal Expansion Device at End Bent No. 1, see Sheets No. 6 & 8.

The top of W16 x 36 shall not exceed 1 1/2" over top of coped area of girder.

Detailed Aug. 2016
Checked Aug. 2016

Note: This drawing is not to scale. Follow dimensions.

STATE OF MISSOURI
DAVID JAMES HAGEMEYER
NUMBER PE-2007002788
PROFESSIONAL ENGINEER

THIS SHEET HAS BEEN SIGNED, SEALED AND DATED ELECTRONICALLY.

DATE PREPARED	10/6/2016
ROUTE	I-55
STATE	MO
DISTRICT	BR
SHEET NO.	5
COUNTY	JEFFERSON
JOB NO.	J6I3131
CONTRACT ID.	
PROJECT NO.	
BRIDGE NO.	A10354

DESCRIPTION

DATE

MISSOURI HIGHWAYS AND TRANSPORTATION COMMISSION

105 WEST CAPITOL
JEFFERSON CITY, MO 65102
1-888-ASK-MODOT (1-888-275-6636)

IF A SEAL IS PRESENT ON THIS SHEET IT HAS BEEN ELECTRONICALLY SEALED AND DATED.

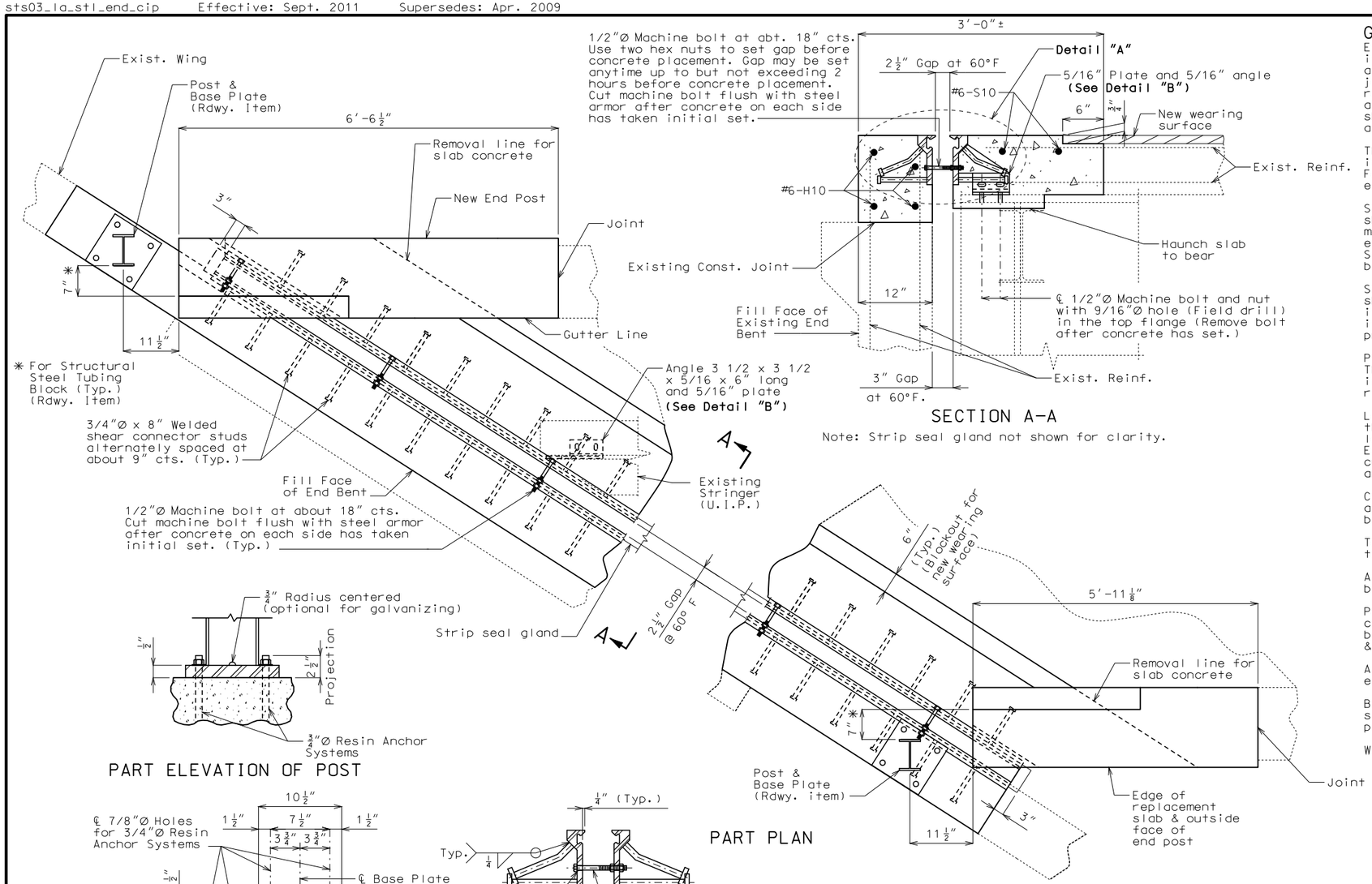

SECTION A-A

Note: Strip seal gland not shown for clarity.

GENERAL NOTES:

Expansion joint system shall be fabricated in one section, except for stage construction and when the length is over 50 feet. A complete joint penetration groove welded splice shall be required. Welds shall be ground flush to provide a smooth surface. The expansion joint system shall be fabricated and installed to the crown and grade of the roadway.

The strip seal gland shall be installed in joints in one continuous piece without field splices. Factory splicing will be permitted for joints in excess of 53 feet.

Structural steel for the expansion joint system shall be ASTM A709 Grade 36 except the steel armor may be ASTM A709 Grade 50W. Anchors for the expansion joint system shall be in accordance with Sec 1037. Strip seal expansion joint system shall be in accordance with Sec 717.

Structural steel for the expansion joint system shall be coated with a minimum of two coats of inorganic zinc primer (5 mils minimum) or galvanized in accordance with ASTM A123. Anchors need not be protected from overspray.

Plan dimensions are based on installation at 60°F. The expansion gap and other dimensions shall be increased or decreased 3/16″ for each 10° fall or rise in temperature at installation.

Longitudinal reinforcing steel shall be placed so that ends shall not be more than ±1″ from vertical leg of the steel armor at the expansion joint system. Existing longitudinal reinforcing steel shall be cut/bent ±1″ from the vertical leg of the steel armor at the expansion joint system.

Concrete shall be forced under and around steel armor and anchors. Proper consolidation of the concrete shall be achieved by localized internal vibration.

Top of backwall for End Bent No. 1 shall be formed to the crown and grade of the roadway.

All concrete above the upper construction joint in backwall shall be Class B-2.

Payment for all concrete and reinforcement for end post, complete-in-place will be considered completely covered by the contract unit price for Remove and Replace Curb & Blockout per linear foot.

All exposed edges of the new end post shall match existing curb blockout.

Bars bonded in old concrete not removed shall be cleanly stripped and fully embedded into new concrete where possible.

Work this sheet with Sheet No. 2, 8 & 10.

PART ELEVATION OF POST

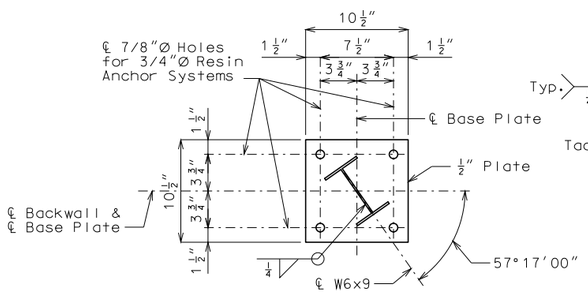

DETAIL OF BASE PLATE

The contractor shall use one of the qualified resin anchor systems in accordance with Sec 1039.

Cost of furnishing and installing the post, base plate and resin anchor system, complete in place, will be considered completely covered by the contract unit price for the Bridge Anchor Section (Roadway item).

The minimum embedment depth in concrete with f′c = 4,000 psi for the resin anchor system shall be that required to meet the minimum ultimate pullout strength in accordance with Sec 1039 but shall not be less than 5″.

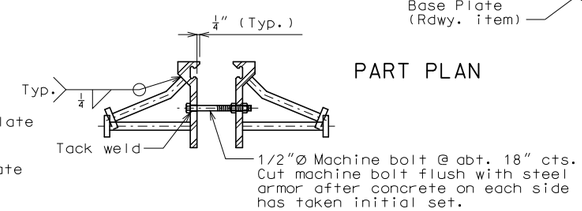

DETAIL "A"

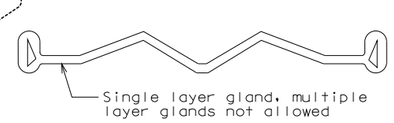

Strip seal gland size = 5″

DETAIL OF GLAND

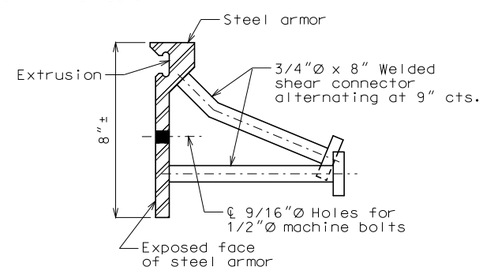

DETAIL OF JOINT ARMOR

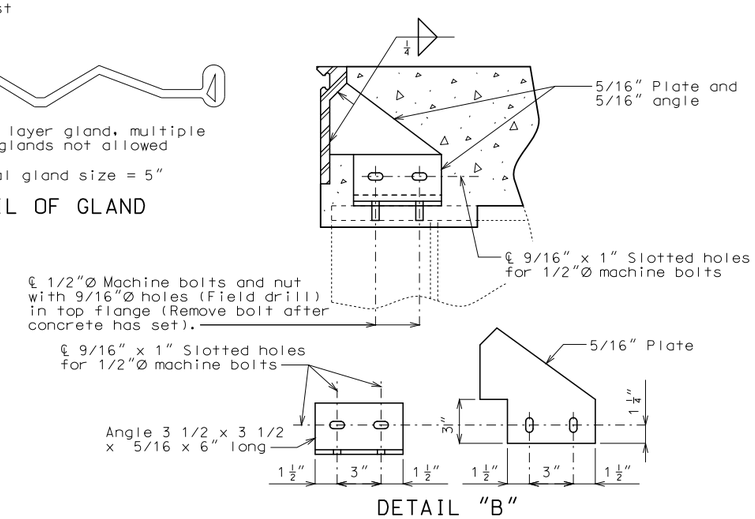

DETAIL "B"

DETAILS OF STRIP SEAL AT END BENT NO. 1

Note: This drawing is not to scale. Follow dimensions.

Sheet No. 6 of 12

Detailed Aug. 2016
Checked Sep. 2016

STATE OF MISSOURI
DAVID JAMES HAGEMEYER
NUMBER PE-2007002788
PROFESSIONAL ENGINEER
THIS SHEET HAS BEEN SIGNED, SEALED AND DATED ELECTRONICALLY.

DATE PREPARED	
10/6/2016	
ROUTE I-55	STATE MO
DISTRICT BR	SHEET NO. 6
COUNTY JEFFERSON	
JOB NO. J6I3131	
CONTRACT ID.	
PROJECT NO.	
BRIDGE NO. A10354	

DATE	DESCRIPTION

MISSOURI HIGHWAYS AND TRANSPORTATION COMMISSION
105 WEST CAPITOL
JEFFERSON CITY, MO 65102
1-888-ASK-MODOT (1-888-275-6636)

IF A SEAL IS PRESENT ON THIS SHEET IT HAS BEEN ELECTRONICALLY SEALED AND DATED.

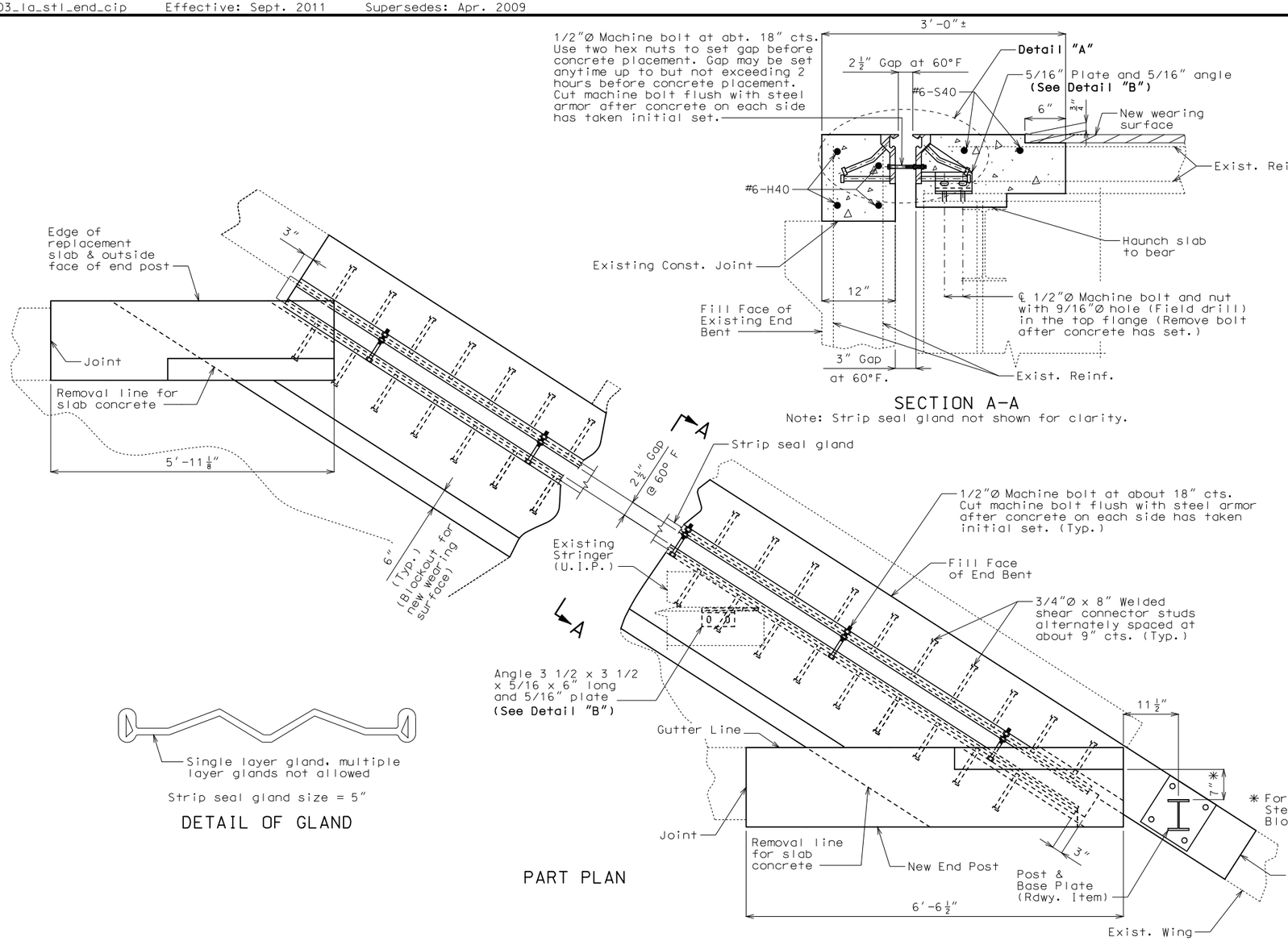

DETAIL OF GLAND

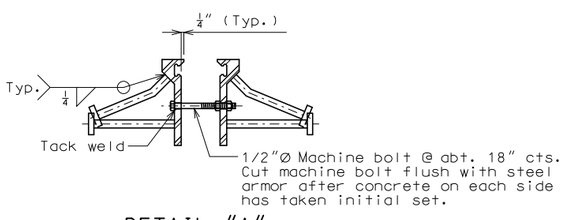

DETAIL "A"

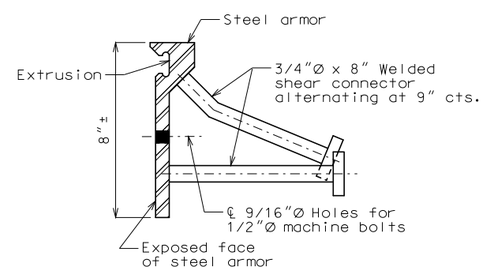

DETAIL OF JOINT ARMOR

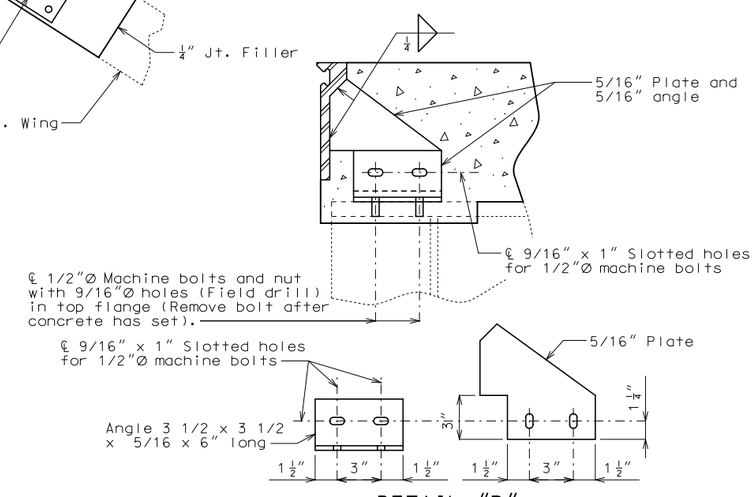

DETAIL "B"

GENERAL NOTES:

Expansion joint system shall be fabricated in one section, except for stage construction and when the length is over 50 feet. A complete joint penetration groove welded splice shall be required. Welds shall be ground flush to provide a smooth surface. The expansion joint system shall be fabricated and installed to the crown and grade of the roadway.

The strip seal gland shall be installed in joints in one continuous piece without field splices. Factory splicing will be permitted for joints in excess of 53 feet.

Structural steel for the expansion joint system shall be ASTM A709 Grade 36 except the steel armor may be ASTM A709 Grade 50W. Anchors for the expansion joint system shall be in accordance with Sec 1037. Strip seal expansion joint system shall be in accordance with Sec 717.

Structural steel for the expansion joint system shall be coated with a minimum of two coats of inorganic zinc primer (5 mils minimum) or galvanized in accordance with ASTM A123. Anchors need not be protected from overspray.

Plan dimensions are based on installation at 60°F. The expansion gap and other dimensions shall be increased or decreased 1/8" for each 10° fall or rise in temperature at installation.

Longitudinal reinforcing steel shall be placed so that ends shall not be more than ±1" from vertical leg of the steel armor at the expansion joint system. Existing longitudinal reinforcing steel shall be cut/bent ±1" from the vertical leg of the steel armor at the expansion joint system.

Concrete shall be forced under and around steel armor and anchors. Proper consolidation of the concrete shall be achieved by localized internal vibration.

Top of backwall for End Bent No. 4 shall be formed to the crown and grade of the roadway.

All concrete above the upper construction joint in backwall shall be Class B-2.

Payment for all concrete and reinforcement for end post, complete-in-place will be considered completely covered by the contract unit price for Remove and Replace Curb & Blockout per linear foot.

All exposed edges of the new end post shall match existing curb blockout.

Bars bonded in old concrete not removed shall be cleanly stripped and fully embedded into new concrete where possible.

For detail of Post & Base Plate, see Sheet No. 6.

Work this sheet with Sheet No. 3, 9 & 11.

DETAILS OF STRIP SEAL AT END BENT NO. 4

Note: This drawing is not to scale. Follow dimensions.

Detailed Aug. 2016
Checked Sep. 2016

STATE OF MISSOURI
DAVID JAMES HAGEMEYER
NUMBER PE-2007002788
PROFESSIONAL ENGINEER
THIS SHEET HAS BEEN SIGNED, SEALED AND DATED ELECTRONICALLY.

DATE PREPARED	
10/6/2016	
ROUTE	STATE
I-55	MO
DISTRICT	SHEET NO.
BR	7
COUNTY	
JEFFERSON	
JOB NO.	
J6I3131	
CONTRACT ID.	
PROJECT NO.	
BRIDGE NO.	
A10354	

DATE	DESCRIPTION

IF A SEAL IS PRESENT ON THIS SHEET IT HAS BEEN ELECTRONICALLY SEALED AND DATED.

MISSOURI HIGHWAYS AND TRANSPORTATION COMMISSION
105 WEST CAPITOL
JEFFERSON CITY, MO 65102
1-888-ASK-MODOT (1-888-275-6636)

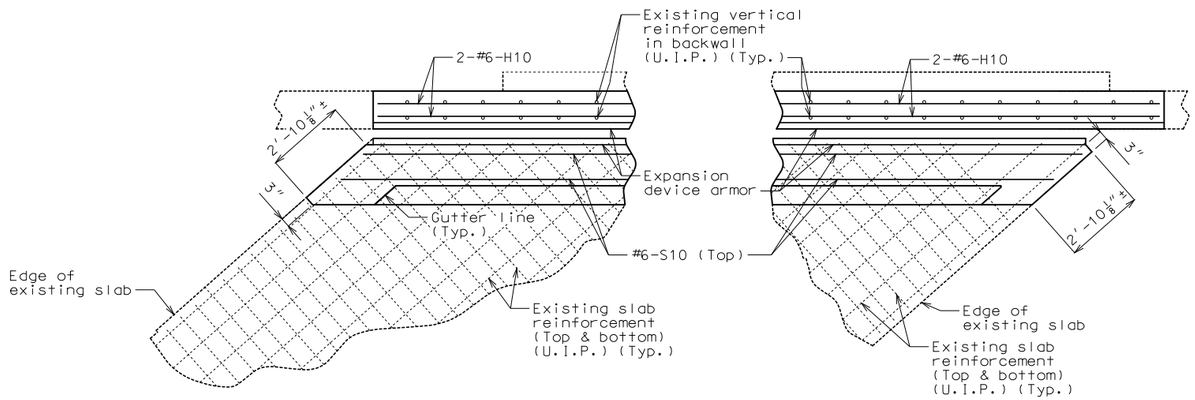

PART PLAN AT END BENT NO. 1 SHOWING REINFORCEMENT

Notes:
Existing reinforcement not embedded in new concrete is to be cut off one inch below concrete removal surface and the resulting holes shall be filled with an approved qualified special mortar.

The #6-H10 & #6-S10 bars to be segmented to accommodate stage construction. The total bar length for #6-H10 & #6-S10 bars shown in Bill of Reinforcing Steel allows for two lap splices with a length of 3'-6" each. Actual bar segment lengths to be determined by contractor. The contractor may use a mechanical bar splice in lieu of a lap splice. When a mechanical bar splice is used, the actual bar segment length will be determined by the contractor to accommodate manufacturer's recommendations for installation and stage construction. The cost of furnishing and installing the bar splices will be considered completely covered by the contract unit price for Reinforcing Steel. No adjustment of the quantity of reinforcing steel will be allowed for the use of mechanical bar splices.

Work this sheet with Sheets No. 2, 6 & 10.

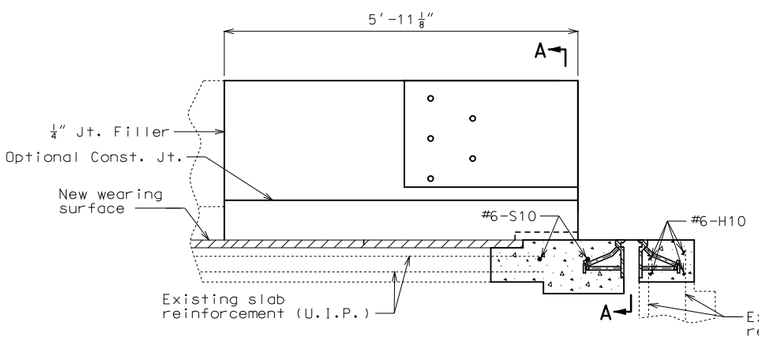

PART ELEVATION OF RIGHT BARRIER CURB

Strip seal gland and end post reinforcement not shown for clarity.

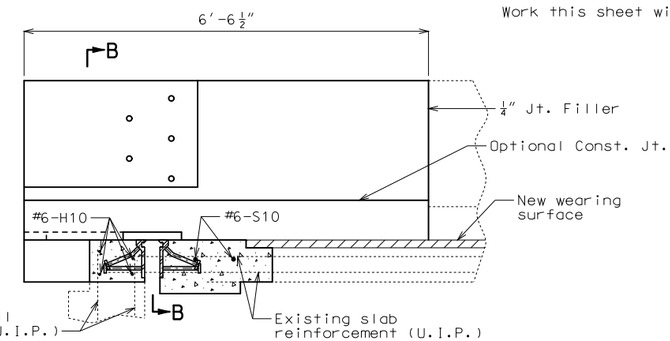

PART ELEVATION OF LEFT BARRIER CURB

Strip seal gland and end post reinforcement not shown for clarity.

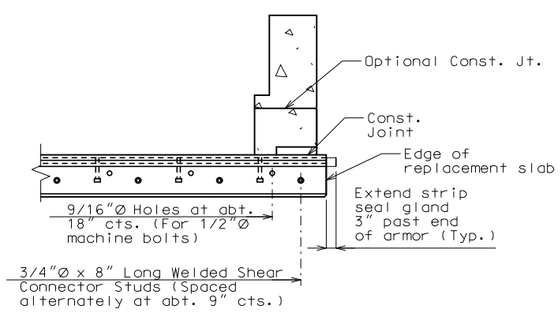

PART SECTION A-A

Trim edge of strip seal gland on backwall side so that gland may extend 3" past end of armor.

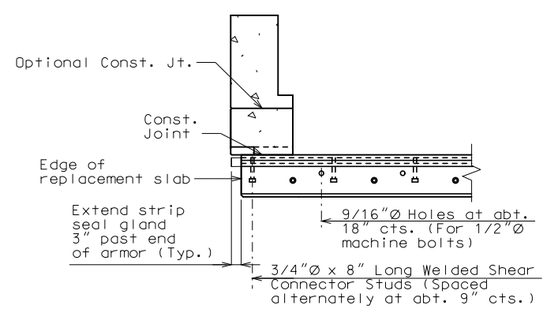

PART SECTION B-B

EXPANSION DEVICE REPLACEMENT AT END BENT NO. 1

Detailed Aug. 2016
Checked Sep. 2016

Note: This drawing is not to scale. Follow dimensions.

STATE OF MISSOURI
DAVID JAMES HAGEMEYER
NUMBER PE-2007002788
PROFESSIONAL ENGINEER
THIS SHEET HAS BEEN SIGNED, SEALED AND DATED ELECTRONICALLY.

DATE PREPARED	
10/6/2016	
ROUTE	STATE
I-55	MO
DISTRICT	SHEET NO.
BR	8
COUNTY	
JEFFERSON	
JOB NO.	
J6I3131	
CONTRACT ID.	
PROJECT NO.	
BRIDGE NO.	
A10354	

DATE	DESCRIPTION

IF A SEAL IS PRESENT ON THIS SHEET IT HAS BEEN ELECTRONICALLY SEALED AND DATED.

MISSOURI HIGHWAYS AND TRANSPORTATION COMMISSION
105 WEST CAPITOL
JEFFERSON CITY, MO 65102
1-888-ASK-MODOT (1-888-275-6636)

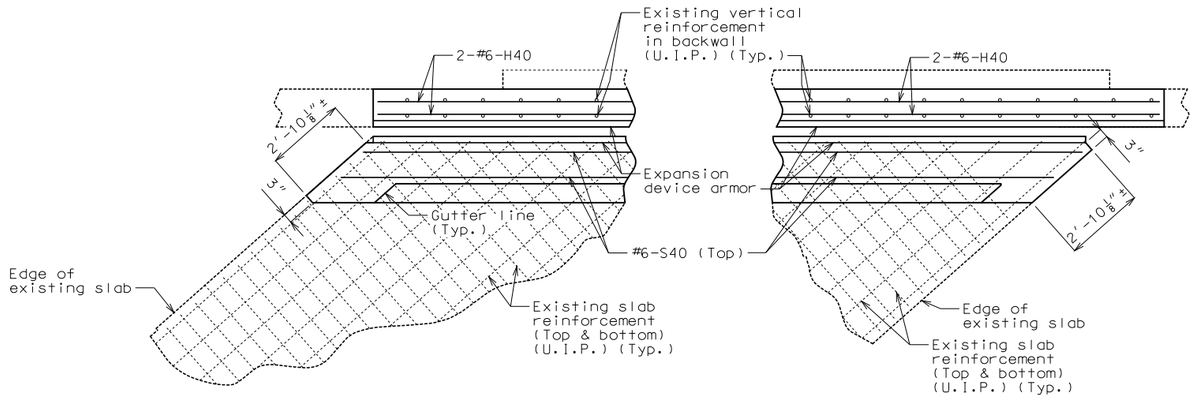

PART PLAN AT END BENT NO. 4 SHOWING REINFORCEMENT

Notes:
Existing reinforcement not embedded in new concrete is to be cut off one inch below concrete removal surface and the resulting holes shall be filled with an approved qualified special mortar.

The #6-H40 & #6-S40 bars to be segmented to accommodate stage construction. The total bar length for #6-H40 & #6-S40 bars shown in Bill of Reinforcing Steel allows for two lap splices with a length of 3'-6" each. Actual bar segment lengths to be determined by contractor. The contractor may use a mechanical bar splice in lieu of a lap splice. When a mechanical bar splice is used, the actual bar segment length will be determined by the contractor to accommodate manufacturer's recommendations for installation and stage construction. The cost of furnishing and installing the bar splices will be considered completely covered by the contract unit price for Reinforcing Steel. No adjustment of the quantity of reinforcing steel will be allowed for the use of mechanical bar splices.

Work this sheet with Sheets No. 3, 7 & 11.

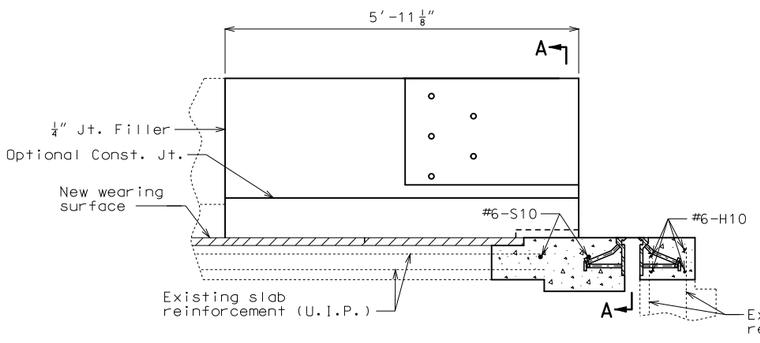

PART ELEVATION OF LEFT BARRIER CURB

Strip seal gland and end post reinforcement not shown for clarity.

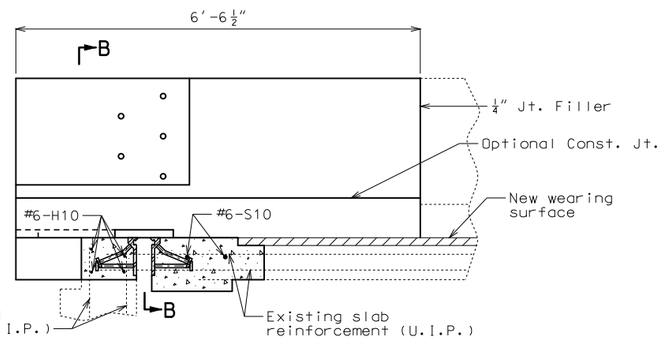

PART ELEVATION OF RIGHT BARRIER CURB

Strip seal gland and end post reinforcement not shown for clarity.

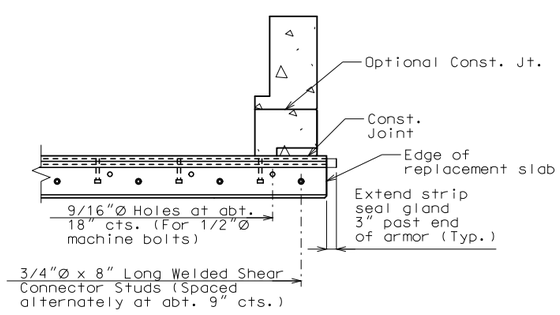

PART SECTION A-A

Trim edge of strip seal gland on backwall side so that gland may extend 3" past end of armor.

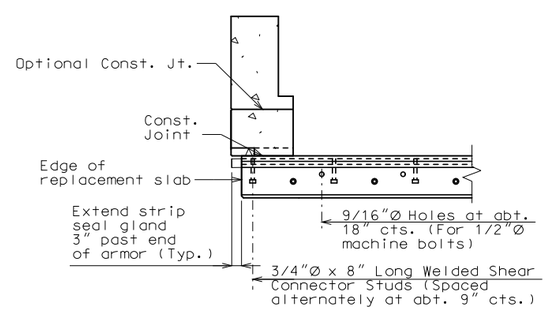

PART SECTION B-B

EXPANSION DEVICE REPLACEMENT AT END BENT NO. 4

Detailed Aug. 2016
Checked Sep. 2016

Note: This drawing is not to scale. Follow dimensions.

STATE OF MISSOURI
DAVID JAMES HAGEMEYER
NUMBER PE-2007002788
PROFESSIONAL ENGINEER
THIS SHEET HAS BEEN SIGNED, SEALED AND DATED ELECTRONICALLY.

DATE PREPARED	
10/6/2016	
ROUTE I-55	STATE MO
DISTRICT BR	SHEET NO. 9
COUNTY JEFFERSON	
JOB NO. J6I3131	
CONTRACT ID.	
PROJECT NO.	
BRIDGE NO. A10354	

DATE	DESCRIPTION

MISSOURI HIGHWAYS AND TRANSPORTATION COMMISSION
105 WEST CAPITOL
JEFFERSON CITY, MO 65102
1-888-ASK-MODOT (1-888-275-6636)

IF A SEAL IS PRESENT ON THIS SHEET IT HAS BEEN ELECTRONICALLY SEALED AND DATED.

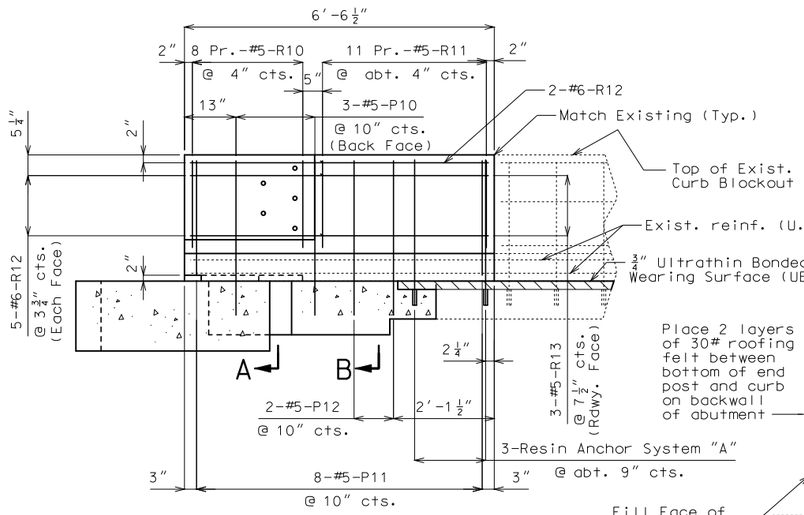

ELEVATION SHOWING NEW LEFT END POST REINFORCEMENT

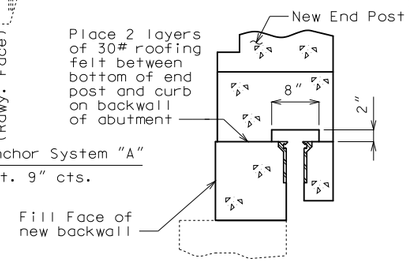

SECTION E-E

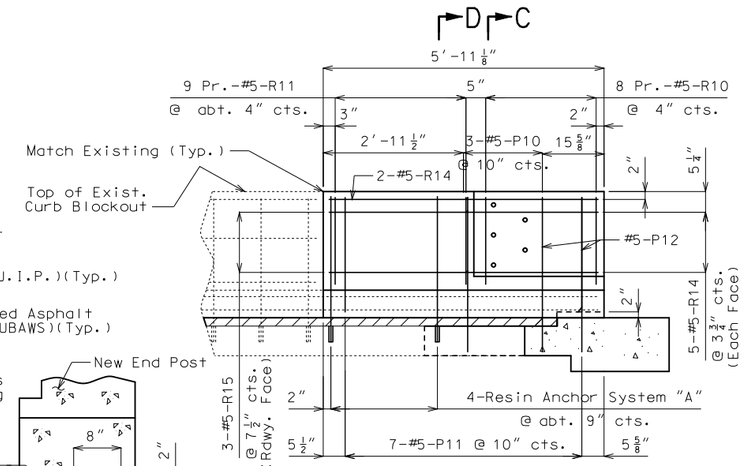

ELEVATION SHOWING NEW RIGHT END POST REINFORCEMENT

Notes:

Top of end post shall be built parallel to grade with curb & blockout joints normal to grade (match existing).

Payment for all concrete and reinforcement for end post, complete in place, shall be considered completely covered by the contract unit price for Remove and Replace Curb & Blockout.

The contractor shall use one of the qualified resin anchor systems, if required, in accordance with Sec 1039.

Cost of furnishing and installing the resin anchor systems, complete in place, will be considered completely covered by the contract unit price for Remove and Replace Curb & Blockout.

The minimum embedment depth in concrete with f'c = 4,000 psi for the resin anchor systems shall be that required to meet the minimum ultimate pullout strength in accordance with Sec 1039 but shall not be less than 5".

An epoxy coated #5 Grade 60 reinforcing bar shall be substituted for the 5/8"Ø threaded rod.

Work this sheet with Sheets No. 2, 6 & 8.

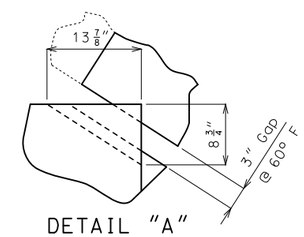

DETAIL "A"

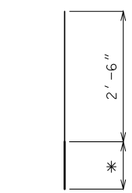

System "A"
(7 Req'd.)

DETAILS OF RESIN ANCHOR SYSTEM

* Manufacturer's recommended embedment length (5" min.)

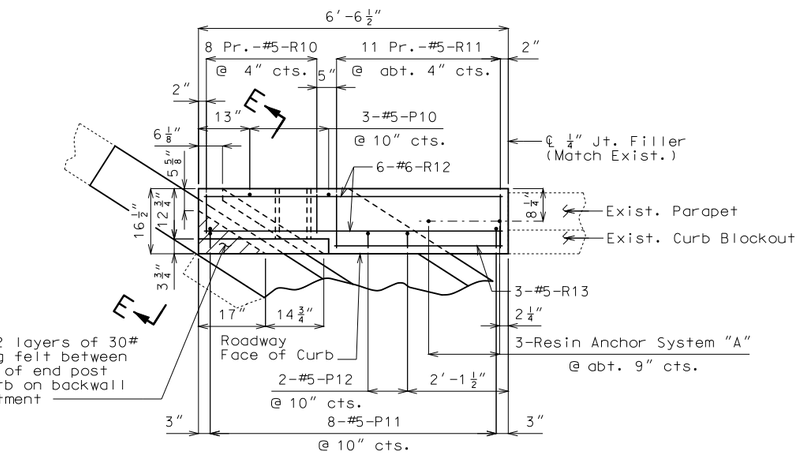

PLAN SHOWING NEW LEFT END POST REINFORCEMENT

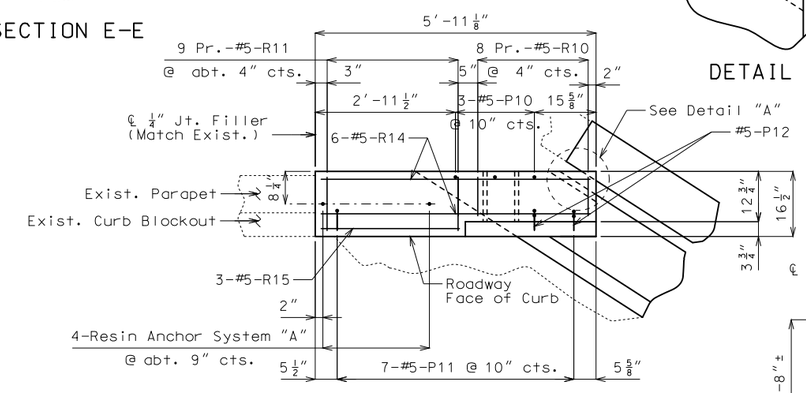

PLAN SHOWING NEW RIGHT END POST REINFORCEMENT

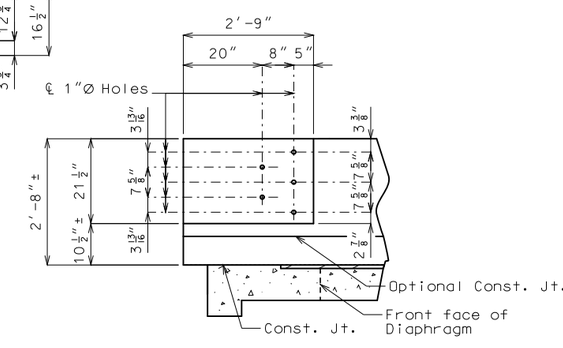

DETAILS OF NEW GUARD RAIL ATTACHMENT

(Left End Post shown.
Right End Post similar)

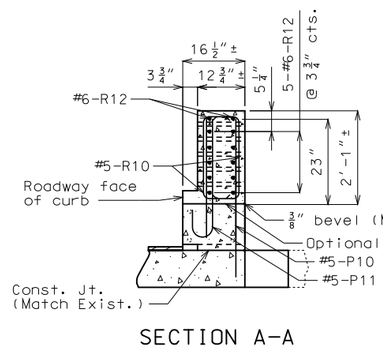

SECTION A-A

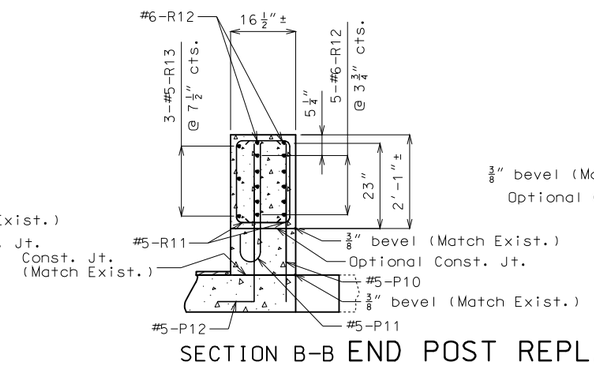

SECTION B-B

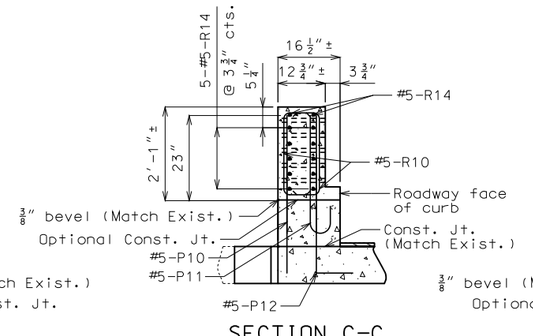

SECTION C-C

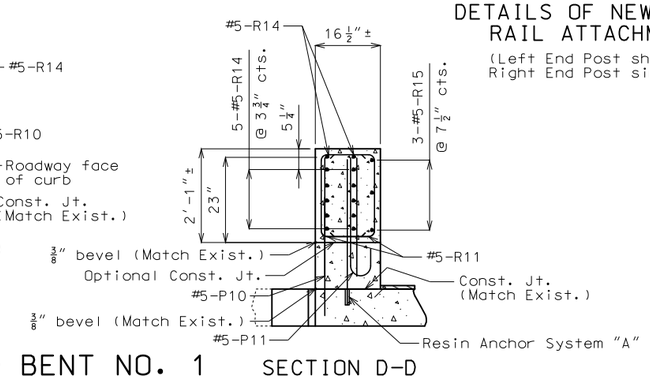

SECTION D-D

END POST REPLACEMENT AT END BENT NO. 1

Detailed Aug. 2016
Checked Sep. 2016

Note: This drawing is not to scale. Follow dimensions.

STATE OF MISSOURI
DAVID JAMES HAGEMEYER
NUMBER PE-2007002788
PROFESSIONAL ENGINEER
THIS SHEET HAS BEEN SIGNED, SEALED AND DATED ELECTRONICALLY.

DATE PREPARED	
10/6/2016	
ROUTE	STATE
I-55	MO
DISTRICT	SHEET NO.
BR	10
COUNTY	
JEFFERSON	
JOB NO.	
J6I3131	
CONTRACT ID.	
PROJECT NO.	
BRIDGE NO.	
A10354	

DATE	DESCRIPTION

IF A SEAL IS PRESENT ON THIS SHEET IT HAS BEEN ELECTRONICALLY SEALED AND DATED.

MISSOURI HIGHWAYS AND TRANSPORTATION COMMISSION
105 WEST CAPITOL
JEFFERSON CITY, MO 65102
1-888-ASK-MODOT (1-888-275-6636)

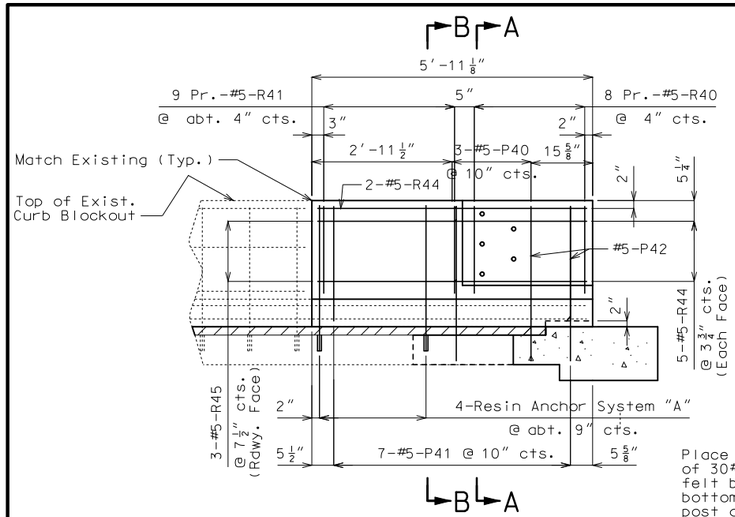

ELEVATION SHOWING NEW LEFT END POST REINFORCEMENT

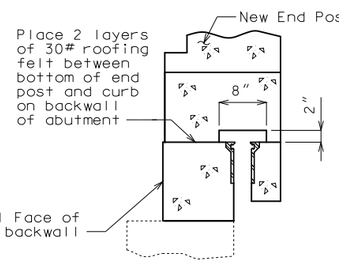

SECTION E-E

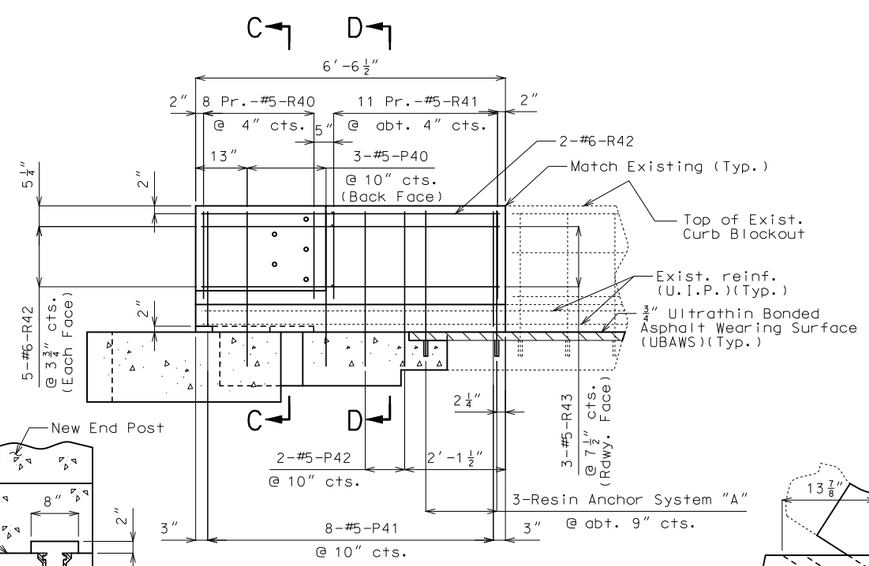

ELEVATION SHOWING NEW RIGHT END POST REINFORCEMENT

Notes:

Top of end post shall be built parallel to grade with curb & blockout joints normal to grade (match existing).

Payment for all concrete and reinforcement for end post, complete in place, shall be considered completely covered by the contract unit price for Remove and Replace Curb & Blockout.

The contractor shall use one of the qualified resin anchor systems, if required, in accordance with Sec 1039.

Cost of furnishing and installing the resin anchor systems, complete in place, will be considered completely covered by the contract unit price for Remove and Replace Curb & Blockout.

The minimum embedment depth in concrete with f′c = 4,000 psi for the resin anchor systems shall be that required to meet the minimum ultimate pullout strength in accordance with Sec 1039 but shall not be less than 5″.

An epoxy coated #5 Grade 60 reinforcing bar shall be substituted for the 5/8″Ø threaded rod.

Work this sheet with Sheets No. 3, 7 & 9.

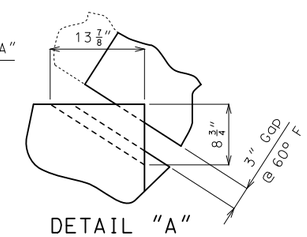

DETAIL "A"

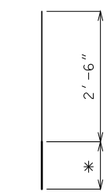

System "A" (7 Req'd.)

DETAILS OF RESIN ANCHOR SYSTEM

* Manufacturer's recommended embedment length (5″ min.)

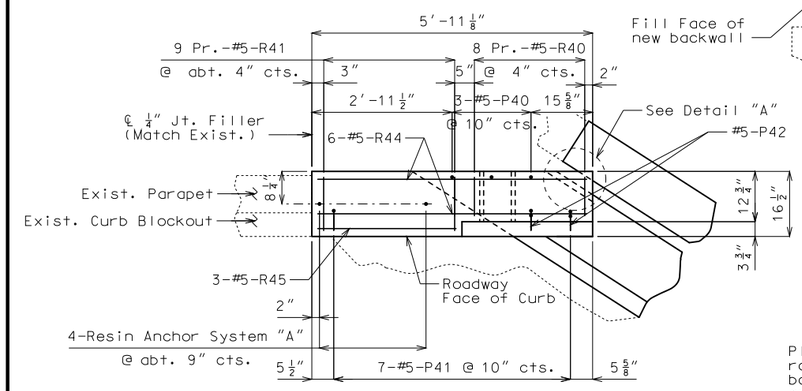

PLAN SHOWING NEW LEFT END POST REINFORCEMENT

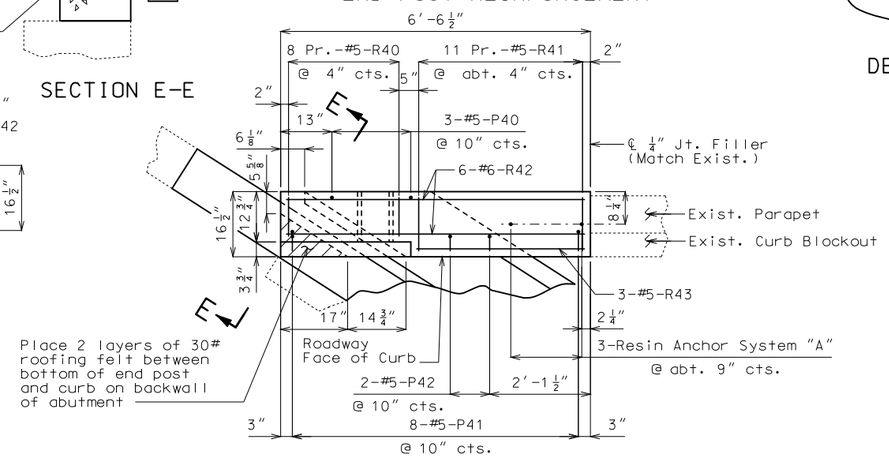

PLAN SHOWING NEW RIGHT END POST REINFORCEMENT

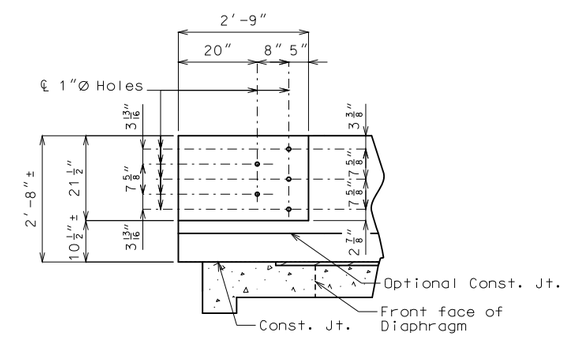

DETAILS OF NEW GUARD RAIL ATTACHMENT

(Left End Post shown. Right End Post similar)

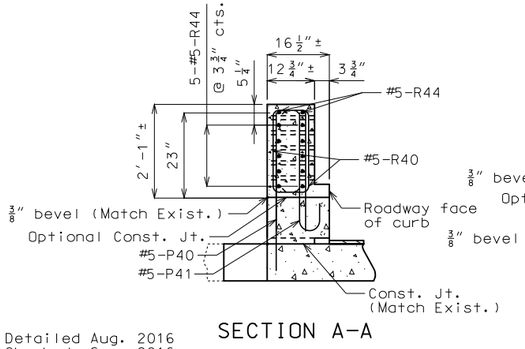

SECTION A-A

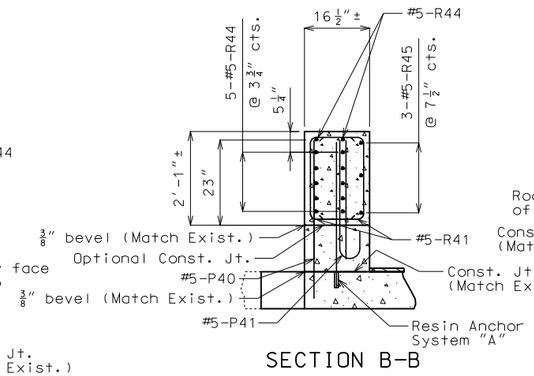

SECTION B-B

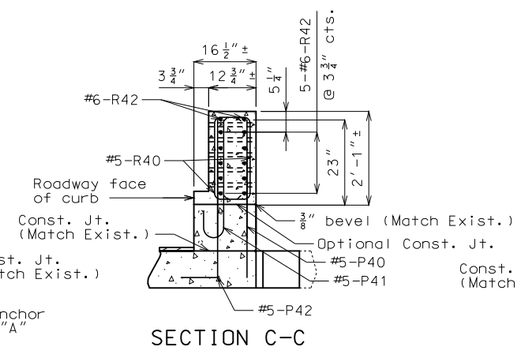

SECTION C-C

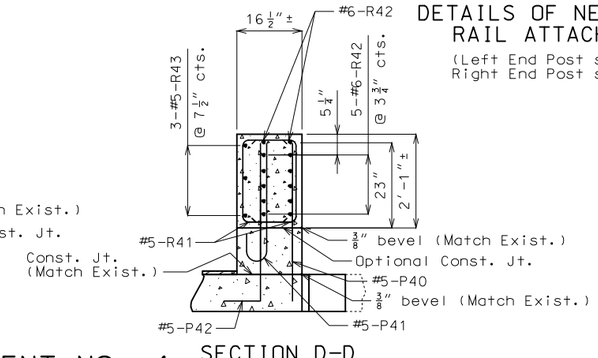

SECTION D-D

END POST REPLACEMENT AT END BENT NO. 4

Detailed Aug. 2016
Checked Sep. 2016

Note: This drawing is not to scale. Follow dimensions.

STATE OF MISSOURI
DAVID JAMES HAGEMEYER
NUMBER PE-2007002788
PROFESSIONAL ENGINEER
THIS SHEET HAS BEEN SIGNED, SEALED AND DATED ELECTRONICALLY.

DATE PREPARED	
10/6/2016	
ROUTE I-55	STATE MO
DISTRICT BR	SHEET NO. 11
COUNTY JEFFERSON	
JOB NO. J6I3131	
CONTRACT ID.	
PROJECT NO.	
BRIDGE NO. A10354	

DATE	DESCRIPTION

IF A SEAL IS PRESENT ON THIS SHEET IT HAS BEEN ELECTRONICALLY SEALED AND DATED.

MISSOURI HIGHWAYS AND TRANSPORTATION COMMISSION
105 WEST CAPITOL
JEFFERSON CITY, MO 65102
1-888-ASK-MODOT (1-888-275-6636)

BILL OF REINFORCING STEEL

NO. REQ'D.	MARK NO. SIZE	MARK NO. MARK	LOCATION	EPOXY (E)	SHAPE NO.	STIRRUP (S)	SUBSTR. (X)	VARIES (V)	NO. EACH	B FT. IN.	C FT. IN.	D FT. IN.	E FT. IN.	F FT. IN.	H FT. IN.	K FT. IN.	NOMINAL LENGTH FT. IN.	ACTUAL LENGTH FT. IN.	WEIGHT LBS.
			END BENT 1																
4	6	H10	BACKWALL	E	20					89 9.000							89 9	89 9	539
2	6	S10	SLAB	E	20					87 8.000							87 8	87 8	263
			END BENT 4																
4	6	H40	BACKWALL	E	20					89 9.000							89 9	89 9	539
2	6	S40	SLAB	E	20					87 8.000							87 8	87 8	263
			END POST 1																
6	5	P10	END POST	E	20					3 2.000							3 2	3 2	20
15	5	P11	END POST	E	17					2 7.000							3 2	3 2	50
4	5	P12	END POST	E	19	S				3 2.000	12.000						4 2	4 1	17
32	5	R10	END POST	E	10	S					9.750	22.000					3 6	3 3	108
40	5	R11	END POST	E	10	S					13.500	22.000					4 1	3 11	163
12	6	R12	END POST	E	20					6 3.000							6 3	6 3	113
3	5	R13	END POST	E	20					3 6.000							3 6	3 6	11
12	5	R14	END POST	E	20					5 8.000							5 8	5 8	71
3	5	R15	END POST	E	20					2 11.000							2 11	2 11	9
			END POST 4																
6	5	P40	END POST	E	20					3 2.000							3 2	3 2	20
15	5	P41	END POST	E	17					2 7.000							3 2	3 2	50
4	5	P42	END POST	E	19	S				3 2.000	12.000						4 2	4 1	17
32	5	R40	END POST	E	10	S					9.750	22.000					3 6	3 3	108
40	5	R41	END POST	E	10	S					13.500	22.000					4 1	3 11	163
12	6	R42	END POST	E	20					6 3.000							6 3	6 3	113
3	5	R43	END POST	E	20					3 6.000							3 6	3 6	11
12	5	R44	END POST	E	20					5 8.000							5 8	5 8	71
3	5	R45	END POST	E	20					2 11.000							2 11	2 11	9
			TOTALS																
	5			E															898
	6			E															1830
			TOTAL																0
			TOTAL	E															2728
			Slab on Girder																
	5			E															898
	6			E															1830
			TOTAL																2728

BILL OF REINFORCING STEEL

NO. REQ'D.	MARK NO. SIZE	MARK NO. MARK	LOCATION	EPOXY (E)	SHAPE NO.	STIRRUP (S)	SUBSTR. (X)	VARIES (V)	NO. EACH	B FT. IN.	C FT. IN.	D FT. IN.	E FT. IN.	F FT. IN.	H FT. IN.	K FT. IN.	NOMINAL LENGTH FT. IN.	ACTUAL LENGTH FT. IN.	WEIGHT LBS.

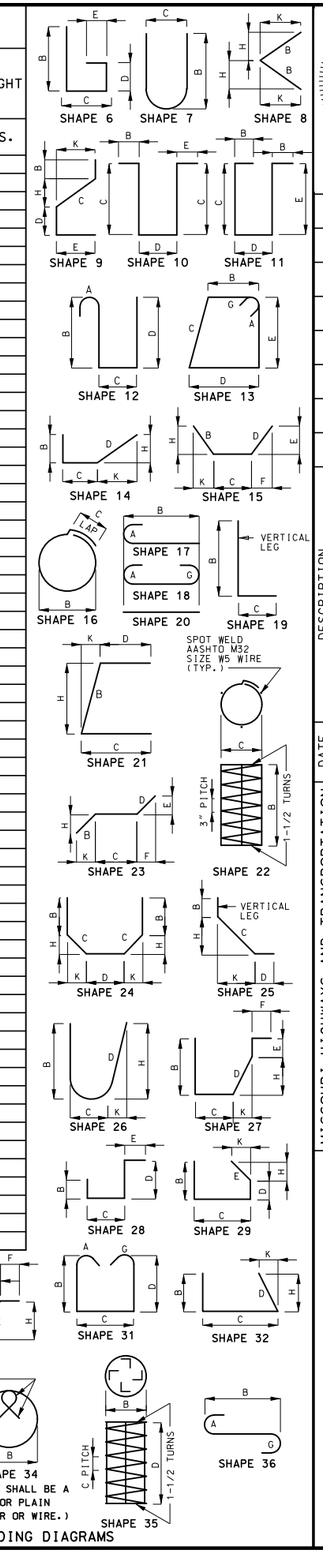

STATE OF MISSOURI
DAVID JAMES HAGEMEYER
NUMBER PE-2007002788
PROFESSIONAL ENGINEER

THIS SHEET HAS BEEN SIGNED, SEALED AND DATED ELECTRONICALLY.

DATE PREPARED 10/6/2016

ROUTE	STATE
I-55	MO
DISTRICT	SHEET NO.
BR	12

COUNTY: JEFFERSON

JOB NO. J6I3131

CONTRACT ID.

PROJECT NO.

BRIDGE NO. A10354

DATE	DESCRIPTION

MISSOURI HIGHWAYS AND TRANSPORTATION COMMISSION

105 WEST CAPITOL
JEFFERSON CITY, MO 65102
1-888-ASK-MODOT (1-888-275-6636)

IF A SEAL IS PRESENT ON THIS SHEET IT HAS BEEN ELECTRONICALLY SEALED AND DATED.

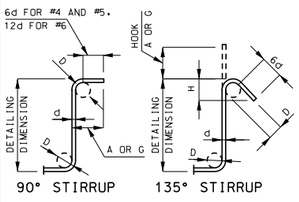

STIRRUP HOOK DIMENSIONS

GRADES 40 - 50 - 60 KSI

BAR SIZE	D (IN.)	90° HOOK: HOOK A OR G	135° HOOK: HOOK A OR G	135° HOOK: APPROX. H
#4	2"	4 1/2"	4 1/2"	3"
#5	2 1/2"	6"	5 1/2"	3 3/4"
#6	4 1/2"	12"	8"	4 1/2"

NOTE: UNLESS OTHERWISE NOTED, DIAMETER "D" IS THE SAME FOR ALL BENDS AND HOOKS ON A BAR.

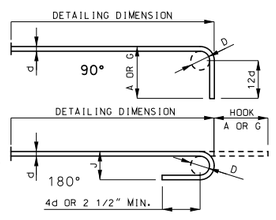

END HOOK DIMENSIONS

BAR SIZE	D (IN.)	ALL GRADES: 180° HOOKS A OR G	180° HOOKS J	90° HOOKS A OR G
#3	2 1/4"	5"	3"	6"
#4	3"	6"	4"	8"
#5	3 3/4"	7"	5"	10"
#6	4 1/2"	8"	6"	12"
#7	5 1/4"	10"	7"	14"
#8	6"	11"	8"	16"
#9	9 1/2"	15"	11 3/4"	19"
#10	10 3/4"	17"	13 1/4"	22"
#11	12"	19"	14 3/4"	2'-0"
#14	18 1/4"	2'-3"	21 3/4"	2'-7"

NOTE:
ALL STANDARD HOOKS AND BENDS OTHER THAN 180 DEGREE ARE TO BE BENT WITH SAME PROCEDURE AS FOR 90 DEGREE STANDARD HOOKS.
HOOKS AND BENDS SHALL BE IN ACCORDANCE WITH THE PROCEDURES AS SHOWN ON THIS SHEET.
E = EPOXY COATED REINFORCEMENT.
S = STIRRUP.
X = BAR IS INCLUDED IN SUBSTRUCTURE QUANTITIES.
V = BAR DIMENSIONS VARY IN EQUAL INCREMENTS BETWEEN DIMENSIONS SHOWN ON THIS LINE AND THE FOLLOWING LINE.
NO. EA. = NUMBER OF BARS OF EACH LENGTH.
NOMINAL LENGTHS ARE BASED ON OUT TO OUT DIMENSIONS SHOWN IN BENDING DIAGRAMS AND ARE LISTED FOR FABRICATORS USE. (NEAREST INCH)
ACTUAL LENGTHS ARE MEASURED ALONG CENTERLINE BAR TO THE NEAREST INCH.
PAYWEIGHTS ARE BASED ON ACTUAL LENGTHS.
FOUR ANGLE OR CHANNEL SPACERS ARE REQUIRED FOR EACH COLUMN SPIRAL. SPACERS ARE TO BE PLACED ON INSIDE OF SPIRALS. LENGTH AND WEIGHT OF COLUMN SPIRALS DO NOT INCLUDE SPLICES OR SPACERS.
REINFORCING STEEL (GRADE 60) FY = 60,000 PSI.

Detailed Sep. 2016
Checked Sep. 2016

Note: This drawing is not to scale. Follow dimensions.

SEC/SUR 1916 TWP 40N RGE 6E

U.I.P. AND REHAB EXISTING (57′-73′-57′) CONTINUOUS COMPOSITE WIDE FLANGE BEAM SPANS (42° 24′ 00″ RA)

General Notes:

Design Specifications:
2002 AASHTO LFD (17th Ed.) Standard Specifications
Load Factor Design
Bridge Deck Rating = 7

Design Loading:
HS20-44 and Modified 24,000 lb Tandem Axle
(1961 & New Construction)

Design Unit Stresses:

Class B-1 Concrete (Curb and Parapet)	f′c = 4,000 psi
Class B-2 Concrete (Slab)	f′c = 4,000 psi
Reinforcing Steel (Grade 60)	fy = 60,000 psi

Joint Filler:
All joint filler shall be in accordance with Sec 1057 for preformed sponge rubber expansion and partition joint filler, except as noted.

Miscellaneous:
In order to maintain grade and a minimum thickness of overlay as shown on plans it may be necessary to use additional quantities of overlay at various locations throughout the structure. The cost of furnishing and installing the overlay will be considered completely covered in the contract unit price, including all additional labor, materials or equipment for variations in thickness of overlay.

Roadway surfacing adjacent to bridge overlay ends shall match bridge overlay (Roadway Item).

Outline of old work is indicated by light dashed lines. Heavy lines indicate new work.

Contractor shall verify all dimensions in field before ordering new material.

Contractor shall remove all asphalt overlay to existing concrete substrate.

Bars bonded in old concrete not removed shall be cleanly stripped and embedded into new concrete where possible. length is available, old bars shall extend into new concrete at least 40 diameters for plain bars and 30 diameters for deformed bars, unless otherwise noted.

Traffic Handling:
Traffic to be maintained on structure during construction. See Roadway Plans for traffic control and staged construction details.

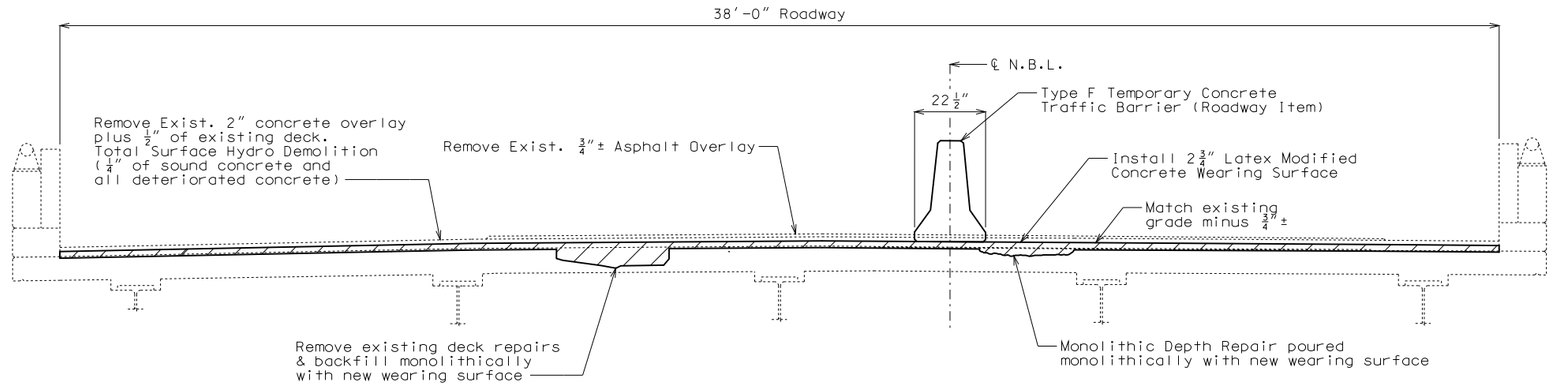

TYPICAL SECTION THRU EXISTING SLAB

Structural Steel Protective Coating:

Protective Coating: System G in accordance with Sec 1081. All existing structural steel including all bearings shall be recoated with System G.

Surface Preparation: Surface preparation of the existing steel shall be in accordance with Sec 1081 for "Recoating of Structural Steel (System G, H or I)". The cost of surface preparation will be considered completely covered by the contract unit price for "Surface Preparation for Recoating Structural Steel".

Prime Coat: The cost of the prime coat will be considered completely covered by the contract unit price for "Field Application of Inorganic Zinc Primer". Tint of the prime coat for System G shall be similar to the color of the field coat to be used.

Field Coats: The color of the field coats shall be Gray (Federal Standard #26373). The cost of the intermediate field coat will be considered completely covered by the contract unit price for "Intermediate Field Coat (System G)". The cost of the finish field coat will be considered completely covered by the contract unit price for "Finish Field Coat (System G)".

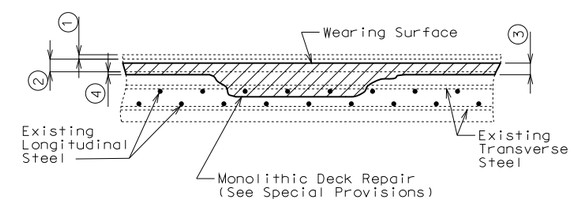

MONOLITHIC DECK REPAIR

1. Remove existing 3/4″ asphalt overlay.
2. Remove existing 2″ concrete overlay plus 1/2″ of original deck.
3. 2 3/4″ (Min.) Latex Modified Concrete Wearing Surface
4. Total surface hydro demolition of existing deck (1/4″ min. of sound concrete and all deteriorated concrete).

Estimated Quantities

	Item		Total
	Removal of Asphalt Wearing Surface	sq. foot	5003
	Removal of Concrete Wearing Surface	sq. foot	7312
	Removal of Existing Deck Repairs	sq. foot	125
*	Partial Removal of Existing Bridge Deck	sq. foot	190
**	Removal of Existing Expansion Joint & Adjacent Concrete	lin. foot	52
	Remove and Replace Curb & Blockout	lin. foot	15
	Latex Modified Concrete Wearing Surface	sq. yard	812
	Class B-2 Concrete	cu. yard	30.2
	Total Surface Hydro Demolition	sq. yard	812
***	Monolithic Deck Repair	cu. yard	7.3
	Reinforcing Steel (Epoxy Coated)	pound	2070
	Protective Coating - Concrete Bents and Piers (Urethane)	lump sum	1
	Rehabilitate Bearings	each	5
	Surface Preparation for Recoating Structural Steel	sq. foot	7700
	Field Application of Inorganic Zinc Primer	sq. foot	7700
	Intermediate Field Coat System (System G)	sq. foot	2000
	Finish Field Coat (System G)	sq. foot	2000
	Strip Seal Expansion Joint System	lin. foot	52

* @ End Bent No. 1
** @ End Bent No. 4
*** Monolithic Deck Repairs will be made at a fixed unit price (See Job Special Provisions).

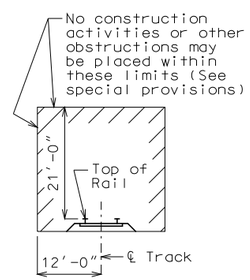

MINIMUM CONSTRUCTION CLEARANCES
(Normal to railroad)
(Not to scale)

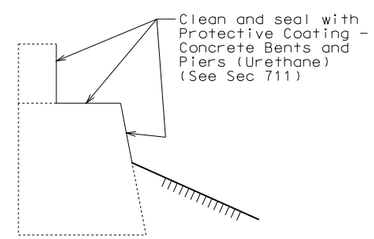

TYPICAL SECTION THRU END BENT 4 SHOWING PROTECTIVE COATING

REPAIRS TO BRIDGE: I-55 NB OVER UNION PACIFIC RR
ROUTE I-55 FROM ROUTE 61 SOUTH
ABOUT 0.6 MILE S.E. OF ROUTE 61
STA. 1008+72.56± (Match Existing)

STD. 617.20
STD. 706.35

Detailed Aug. 2016
Checked Sep. 2016

Note: This drawing is not to scale. Follow dimensions.

STATE OF MISSOURI
DAVID JAMES HAGEMEYER
NUMBER PE-2007002788
PROFESSIONAL ENGINEER
THIS SHEET HAS BEEN SIGNED, SEALED AND DATED ELECTRONICALLY.

DATE PREPARED 10/6/2016
ROUTE I-55 | STATE MO
DISTRICT BR | SHEET NO. 1
COUNTY JEFFERSON
JOB NO. J6I3131
CONTRACT ID.
PROJECT NO.
BRIDGE NO. A22214

DESCRIPTION | DATE

MISSOURI HIGHWAYS AND TRANSPORTATION COMMISSION
105 WEST CAPITOL
JEFFERSON CITY, MO 65102
1-888-ASK-MODOT (1-888-275-6636)

IF A SEAL IS PRESENT ON THIS SHEET IT HAS BEEN ELECTRONICALLY SEALED AND DATED.

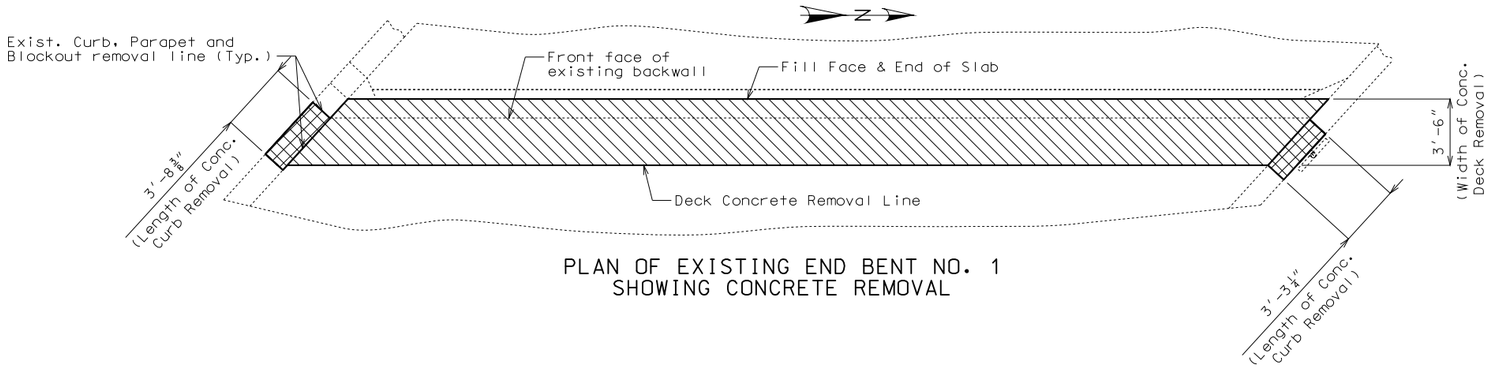

PLAN OF EXISTING END BENT NO. 1
SHOWING CONCRETE REMOVAL

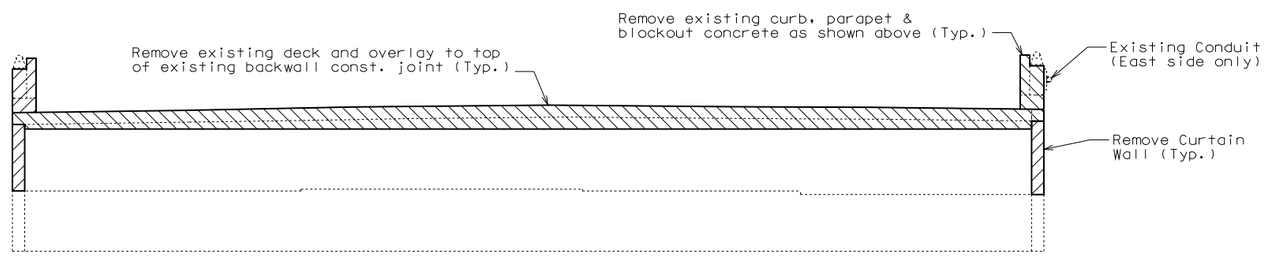

ELEVATION LOOKING BACK STATION AT EXISTING
END BENT NO. 1 SHOWING CONCRETE REMOVAL

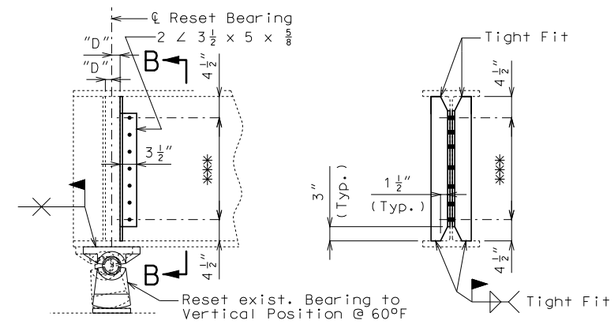

DETAIL SHOWING RESET BEARINGS AT END BENT NO. 4 SECTION B-B

(See Job Special Provisions)

*** Seven 13/16"Ø Holes @ abt. 3 3/4" cts. for 3/4"Ø H.S. Bolts, nuts and washers.

Notes: Bearings shall be adjusted from vertical 1/2", measured at the top of flange, towards backwall or away from backwall for each 10° rise or fall in temperature from 60°F.

Place outstanding leg of angle as close as possible to ℄ of reset bearing.

Fabricated structural steel shall be ASTM A709 Grade 50, except as noted.

The end diaphragms shall be used in same position.

New bearing stiffener not required if "D" < 0.75".

Existing bearings at End Bent No. 4 shall be removed, cleaned, recoated and placed back in their original position. Payment for removing, cleaning and recoating will be considered completely covered by the contract unit price for Rehabilitate Bearings. See Special Provisions.

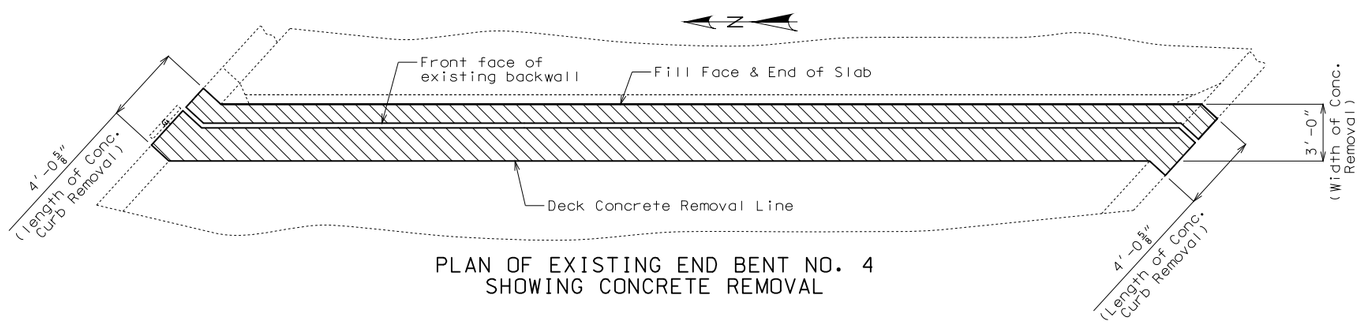

PLAN OF EXISTING END BENT NO. 4
SHOWING CONCRETE REMOVAL

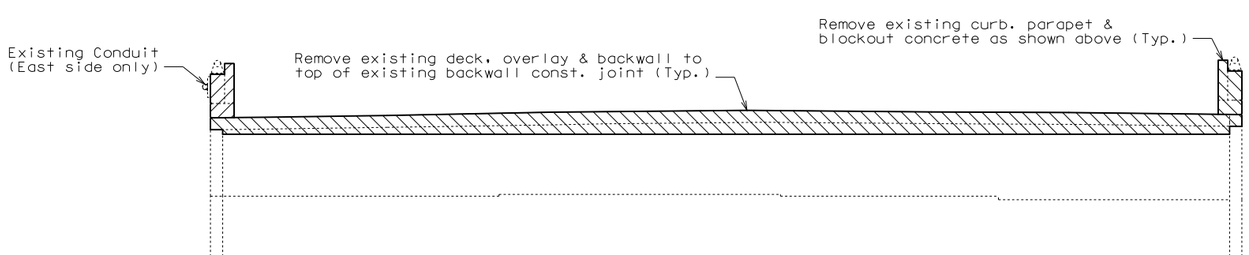

ELEVATION LOOKING AHEAD STATION AT EXISTING
END BENT NO. 4 SHOWING CONCRETE REMOVAL

Notes:

The cost of bridge deck concrete removal as shown at End Bent No. 1 will be considered completely covered by the contract unit price for Partial Removal of Existing Bridge Deck.

The cost of curb, parapet & blockout concrete removal at End Bent No. 1 and 4 as shown will be considered completely covered by the contract unit price for Remove and Replace Curb & Blockout.

The cost of removing existing expansion joint and slab concrete at End bent No. 4 will be considered completely covered by the contract unit price for Removal of Existing Expansion Joint & Adjacent Concrete.

Contractor shall prevent damage to the existing conduit while removing and replacing curb, parapet and blockout at end bents. The cost of maintaining the attachment of existing conduit will be considered completely covered by the contract unit price for Remove and Replace Curb & Blockout.

Detailed Aug. 2016
Checked Sep. 2016

Note: This drawing is not to scale. Follow dimensions.

STATE OF MISSOURI
DAVID JAMES HAGEMEYER
NUMBER PE-2007002788
PROFESSIONAL ENGINEER

THIS SHEET HAS BEEN SIGNED, SEALED AND DATED ELECTRONICALLY.

DATE PREPARED	
10/6/2016	
ROUTE: I-55	STATE: MO
DISTRICT: BR	SHEET NO.: 2
COUNTY: JEFFERSON	
JOB NO.: J6I3131	
CONTRACT ID.	
PROJECT NO.	
BRIDGE NO.: A22214	

DATE	DESCRIPTION

MISSOURI HIGHWAYS AND TRANSPORTATION COMMISSION
105 WEST CAPITOL
JEFFERSON CITY, MO 65102
1-888-ASK-MODOT (1-888-275-6636)

IF A SEAL IS PRESENT ON THIS SHEET IT HAS BEEN ELECTRONICALLY SEALED AND DATED.

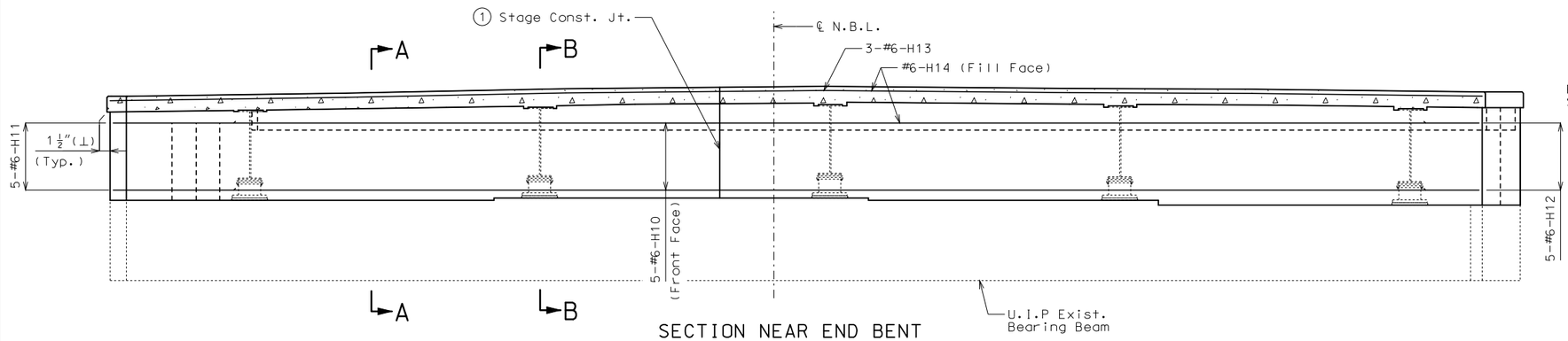

SECTION NEAR END BENT

(Resin anchor systems and #5-U10, #5-U11, #5-U12 & #5-U13 bars not shown for clarity)

Concrete Wearing Surface not shown for clarity.

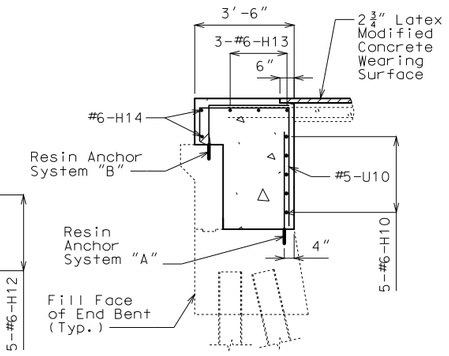

SECTION A-A

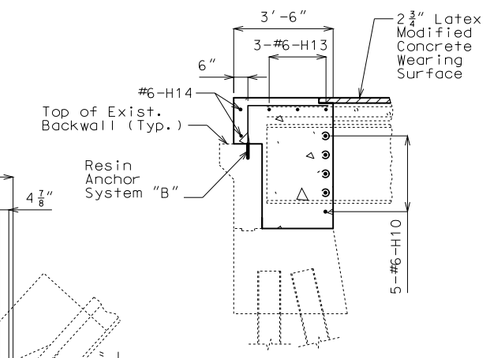

SECTION B-B

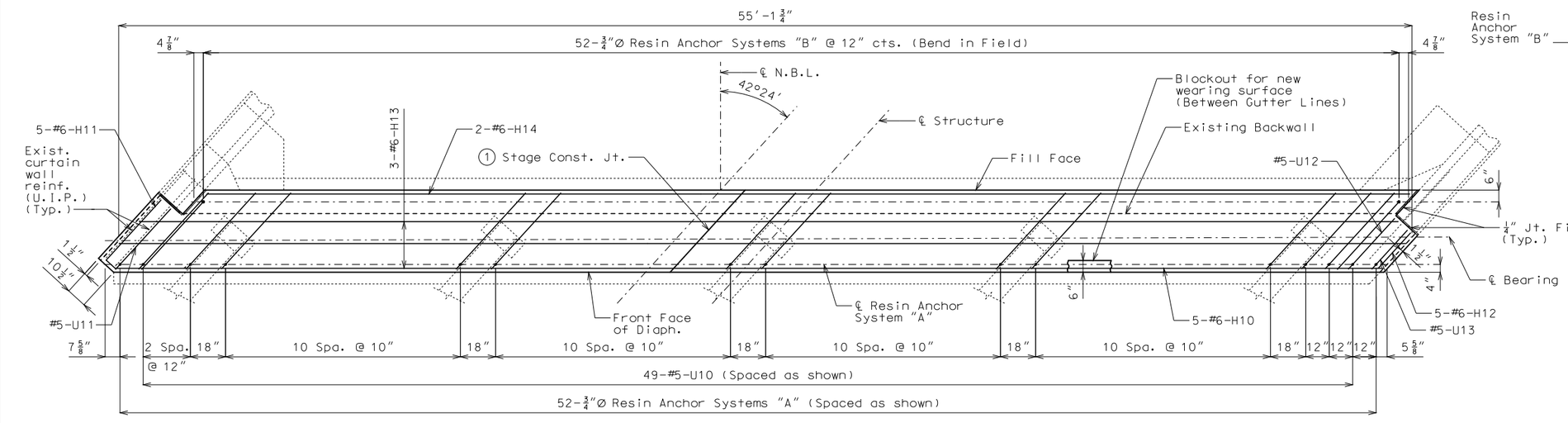

PART PLAN

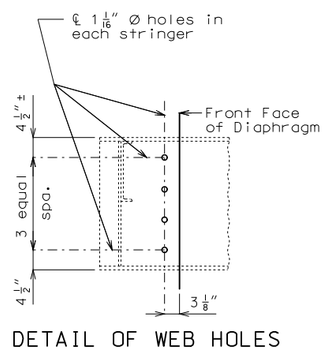

DETAIL OF WEB HOLES AT END BENTS

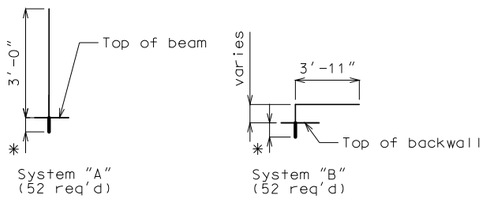

✳ Manufacturer's recommended embedment length (5" min.)

DETAILS OF RESIN ANCHOR SYSTEMS

1 Stage Const. Jt. location to be determined by the contractor with the approval of the Engineer.

Notes:

The contractor shall use one of the qualified resin anchor systems in accordance with Sec 1039.

Cost of furnishing and installing the resin anchor systems shown, complete-in-place, will be considered completely covered by the contract unit price for Class B-2 Concrete.

The minimum embedment depth in concrete with f'c = 4,000 psi for the resin anchor system shall be that required to meet the minimum ultimate pullout strength in accordance with Sec 1039 but shall not be less than 5".

An epoxy coated #6 Grade 60 reinforcing bar shall be substituted for the 3/4"Ø threaded rod.

The exposed and accessible surfaces of the existing structural steel and bearings that will be encased in concrete shall be cleaned with a minimum of SSPC-SP-2 surface preparation before concrete is poured. Payment for cleaning steel to be encased in concrete will be considered completely covered by the contract unit price for Class B-2 Concrete.

Notes (cont.):

Slab concrete removal at end bents necessary to make the end bents integral will be considered completely covered by the contract unit price for Partial Removal of Existing Bridge Deck.

The #6-H10, #6-H13 & #6-H14 bars to be segmented to accommodate stage construction. The total bar length for #6-H10, #6-H13 & #6-H14 bars shown in Bill of Reinforcing Steel allows for one lap splice with a length of 3'-6". Actual bar segment lengths to be determined by contractor. The contractor may use a mechanical bar splice in lieu of a lap splice. When a mechanical bar splice is used, the actual bar segment length will be determined by the contractor to accommodate manufacturer's recommendations for installation and stage construction. The cost of furnishing and installing the bar splices will be considered completely covered by the contract unit price for Reinforcing Steel. No adjustment of the quantity of reinforcing steel will be allowed for the use of mechanical bar splices.

Cost of field drilling holes in existing wide flange beam webs will be considered completely covered by the contract unit price for Class B-2 Concrete.

DETAILS OF END BENT NO. 1

Detailed Aug. 2016
Checked Sep. 2016

Note: This drawing is not to scale. Follow dimensions.

STATE OF MISSOURI
DAVID JAMES HAGEMEYER
NUMBER PE-2007002788
PROFESSIONAL ENGINEER
THIS SHEET HAS BEEN SIGNED, SEALED AND DATED ELECTRONICALLY.

DATE PREPARED	
10/6/2016	
ROUTE	STATE
I-55	MO
DISTRICT	SHEET NO.
BR	3
COUNTY	
JEFFERSON	
JOB NO.	
J6I3131	
CONTRACT ID.	
PROJECT NO.	
BRIDGE NO.	
A22214	

DATE	DESCRIPTION

MISSOURI HIGHWAYS AND TRANSPORTATION COMMISSION
105 WEST CAPITOL
JEFFERSON CITY, MO 65102
1-888-ASK-MODOT (1-888-275-6636)

IF A SEAL IS PRESENT ON THIS SHEET IT HAS BEEN ELECTRONICALLY SEALED AND DATED.

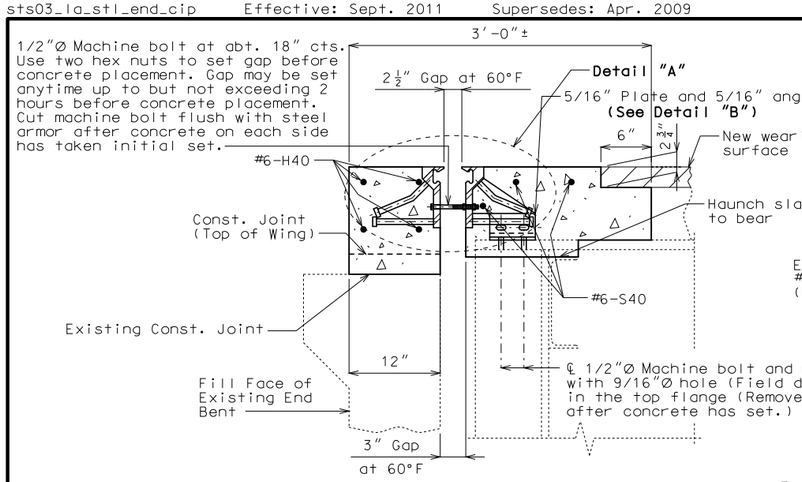

SECTION D-D

Note: Strip seal gland not shown for clarity.

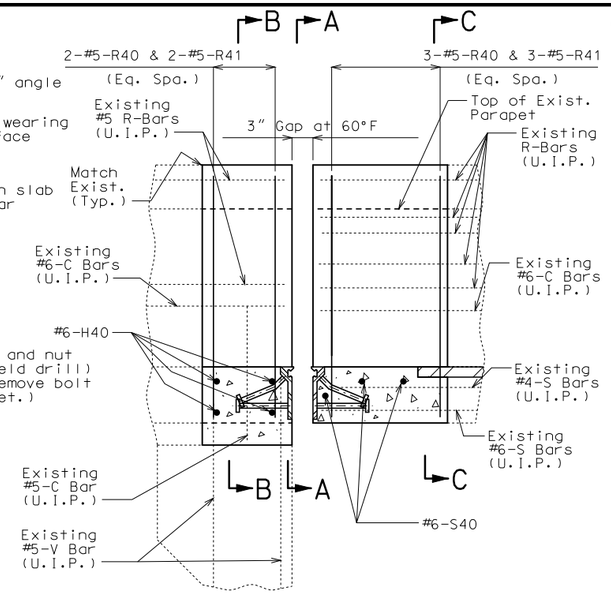

PART ELEVATION OF BARRIER CURB

Notes: Strip seal gland not shown for clarity.

GENERAL NOTES:

Expansion joint system shall be fabricated in one section, except for stage construction and when the length is over 50 feet. A complete joint penetration groove welded splice shall be required. Welds shall be ground flush to provide a smooth surface. The expansion joint system shall be fabricated and installed to the crown and grade of the roadway.

The strip seal gland shall be installed in joints in one continuous piece without field splices. Factory splicing will be permitted for joints in excess of 53 feet.

Structural steel for the expansion joint system shall be ASTM A709 Grade 36 except the steel armor may be ASTM A709 Grade 50W. Anchors for the expansion joint system shall be in accordance with Sec 1037. Strip seal expansion joint system shall be in accordance with Sec 717.

Structural steel for the expansion joint system shall be coated with a minimum of two coats of inorganic zinc primer (5 mils minimum) or galvanized in accordance with ASTM A123. Anchors need not be protected from overspray.

Plan dimensions are based on installation at 60°F. The expansion gap and other dimensions shall be increased or decreased $\frac{1}{8}$" for each 10° fall or rise in temperature at installation.

Existing longitudinal reinforcing steel shall be cut/bent so that ends shall not be more than ±1" from vertical leg of the steel armor at the expansion joint system.

Concrete shall be forced under and around steel armor and anchors. Proper consolidation of the concrete shall be achieved by localized internal vibration.

Top of backwall for End Bent No. 4 shall be formed to the crown and grade of the roadway.

All concrete above the upper construction joint in backwall shall be Class B-2.

Payment for all concrete and reinforcement for curb & blockout, complete-in-place, will be considered completely covered by the contract unit price for Remove and Replace Curb & Blockout.

All exposed edges of the new curb and blockout shall match existing curb, parapet, blockout and end post.

Bars bonded in old concrete not removed shall be cleanly stripped and embedded into new concrete where possible.

Work this sheet with Sheet No. 5.

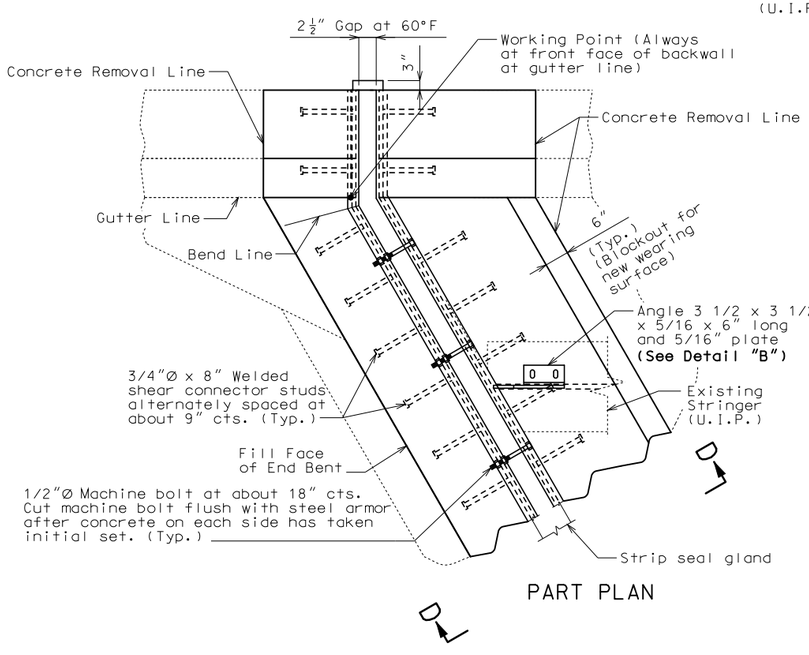

PART PLAN

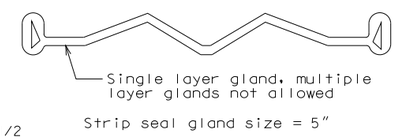

DETAIL OF GLAND

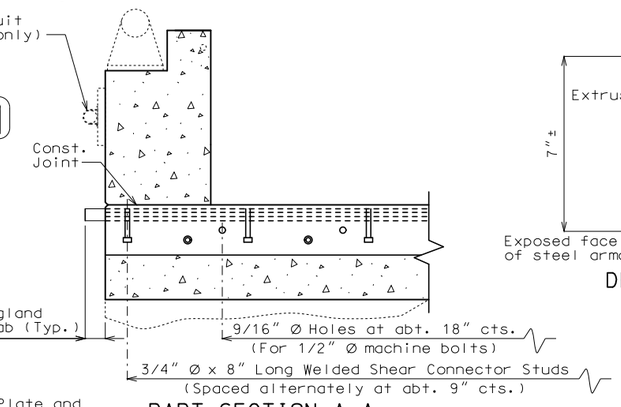

PART SECTION A-A

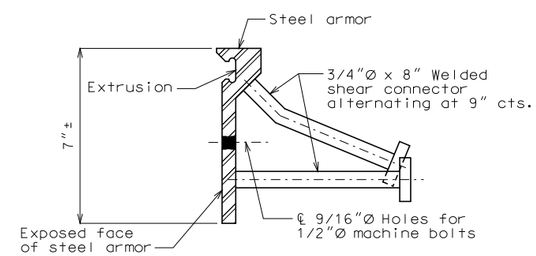

DETAIL OF JOINT ARMOR

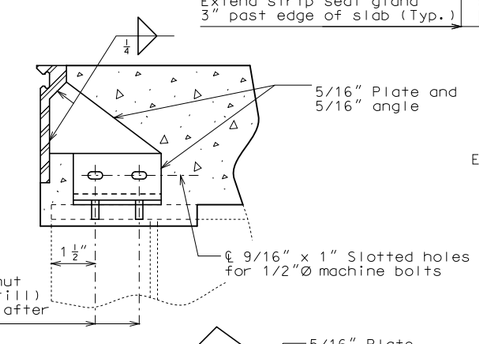

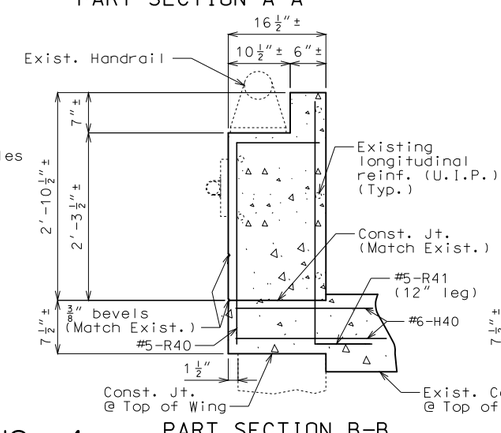

PART SECTION B-B SHOWING REINFORCEMENT

(Strip Seal not shown for clarity)

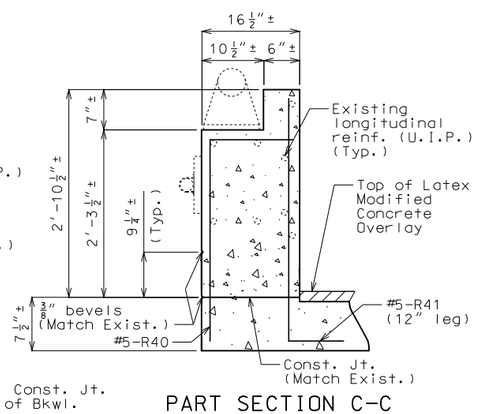

PART SECTION C-C SHOWING REINFORCEMENT

(Strip Seal not shown for clarity)

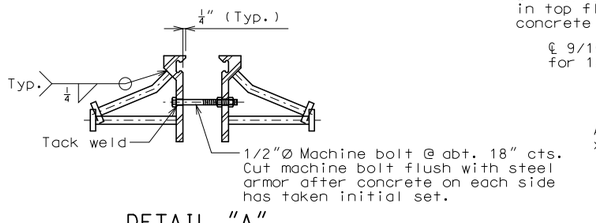

DETAIL "A"

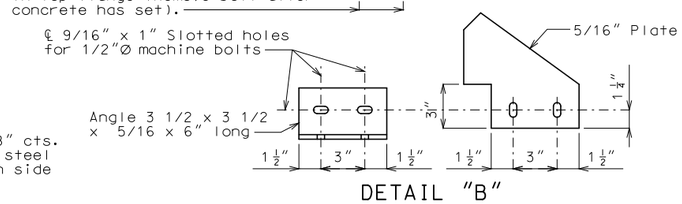

DETAIL "B"

DETAILS OF STRIP SEAL AT END BENT NO. 4

Note: This drawing is not to scale. Follow dimensions.

Sheet No. 4 of 7

Detailed Aug. 2016
Checked Sep. 2016

STATE OF MISSOURI
DAVID JAMES HAGEMEYER
NUMBER PE-2007002788
PROFESSIONAL ENGINEER

THIS SHEET HAS BEEN SIGNED, SEALED AND DATED ELECTRONICALLY.

DATE PREPARED	
10/6/2016	
ROUTE	STATE
I-55	MO
DISTRICT	SHEET NO.
BR	4
COUNTY	
JEFFERSON	
JOB NO.	
J6I3131	
CONTRACT ID.	
PROJECT NO.	
BRIDGE NO.	
A22214	

DATE	DESCRIPTION

IF A SEAL IS PRESENT ON THIS SHEET IT HAS BEEN ELECTRONICALLY SEALED AND DATED.

MISSOURI HIGHWAYS AND TRANSPORTATION COMMISSION
105 WEST CAPITOL
JEFFERSON CITY, MO 65102
1-888-ASK-MODOT (1-888-275-6636)

Notes:

The #6-H40 & #6-S40 bars to be segmented to accommodate stage construction. The total bar length for #6-H40 & #6-S40 bars shown in Bill of Reinforcing Steel allows for one lap splice with a length of 3'-6". Actual bar segment lengths to be determined by contractor. The contractor may use a mechanical bar splice in lieu of a lap splice. When a mechanical bar splice is used, the actual bar segment length will be determined by the contractor to accommodate manufacturer's recommendations for installation and stage construction. The cost of furnishing and installing the bar splices will be considered completely covered by the contract unit price for Reinforcing Steel. No adjustment of the quantity of reinforcing steel will be allowed for the use of mechanical bar splices.

Cost of removing existing expansion joint and slab concrete within the limits shown will be considered completely covered bt the contract unit price for Removal of Existing Expansion Joint & Adjacent Concrete.

For location of slab construction joint, see Roadway Plans for traffic control.

For details of strip seal expansion joint system at End Bent No. 4, see Sheet No. 4.

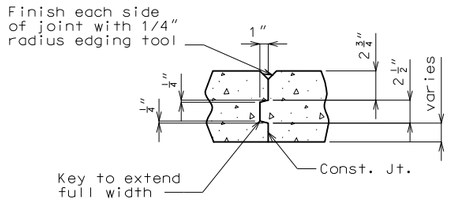

SLAB CONSTRUCTION JOINT DETAIL

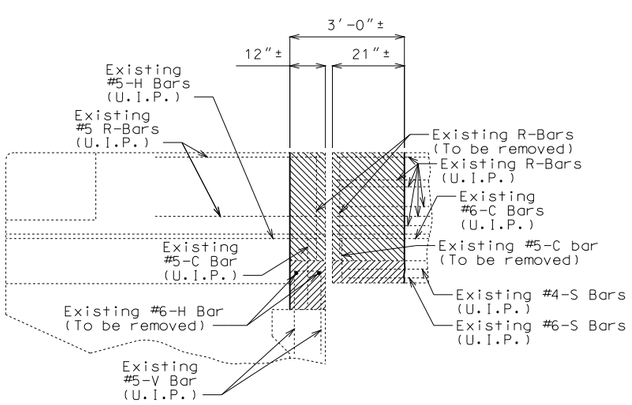

SECTION THRU SLAB AT END BENT NO. 4
SHOWING LIMITS OF CONCRETE REMOVAL

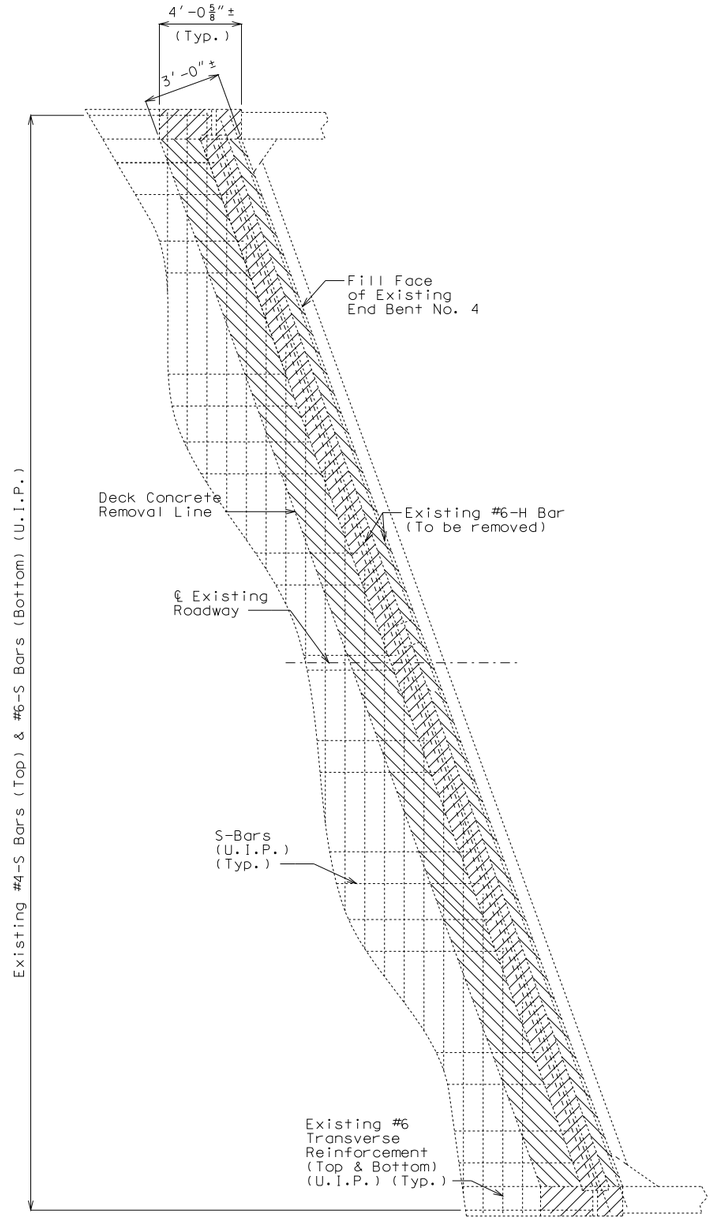

PLAN OF SLAB AT END BENT NO. 4
SHOWING LIMITS OF CONCRETE REMOVAL

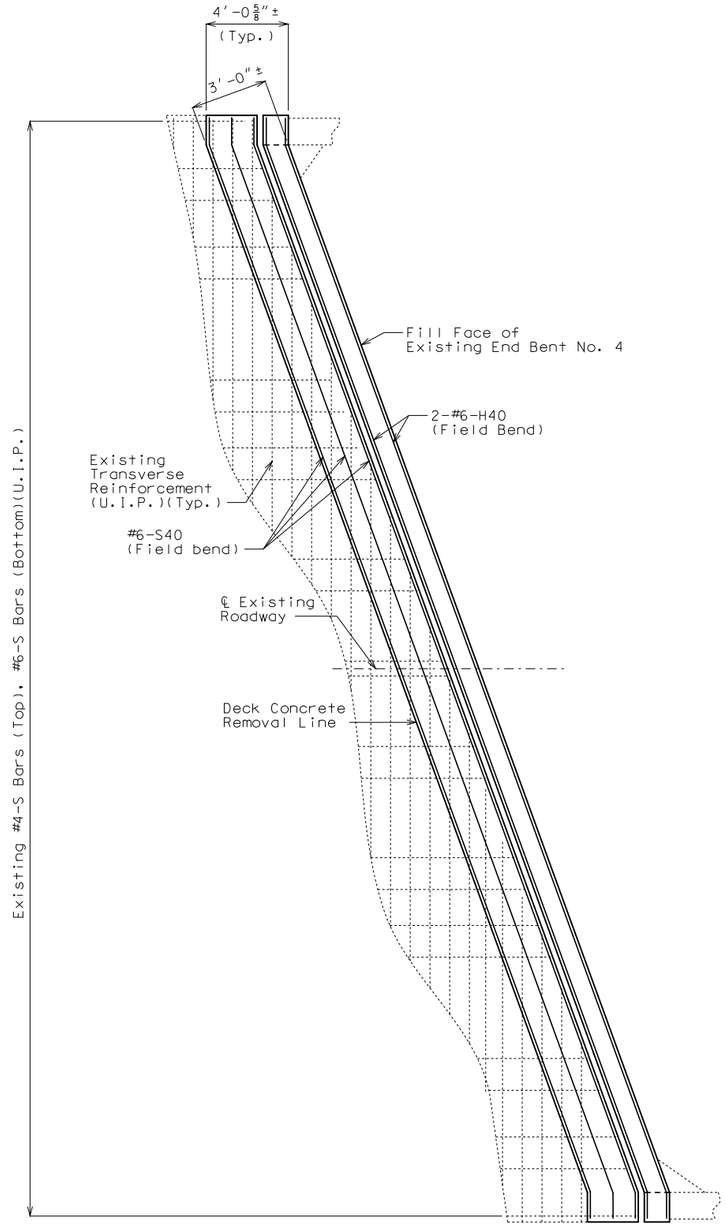

PART PLAN OF SLAB AT END BENT NO. 4
SHOWING NEW CONCRETE AND REINFORCEMENT

EXPANSION DEVICE REPLACEMENT AT END BENT NO. 4

Detailed Aug. 2016
Checked Sep. 2016

Note: This drawing is not to scale. Follow dimensions.

STATE OF MISSOURI
DAVID JAMES HAGEMEYER
NUMBER PE-2007002788
PROFESSIONAL ENGINEER

THIS SHEET HAS BEEN SIGNED, SEALED AND DATED ELECTRONICALLY.

DATE PREPARED	10/6/2016
ROUTE	I-55
STATE	MO
DISTRICT	BR
SHEET NO.	5
COUNTY	JEFFERSON
JOB NO.	J6I3131
CONTRACT ID.	
PROJECT NO.	
BRIDGE NO.	A22214

DESCRIPTION	DATE

MISSOURI HIGHWAYS AND TRANSPORTATION COMMISSION
105 WEST CAPITOL
JEFFERSON CITY, MO 65102
1-888-ASK-MODOT (1-888-275-6636)

IF A SEAL IS PRESENT ON THIS SHEET IT HAS BEEN ELECTRONICALLY SEALED AND DATED.

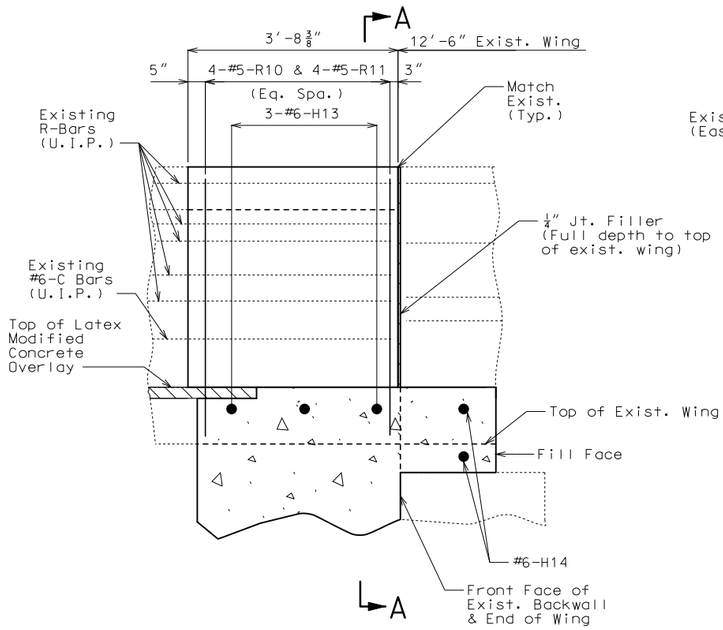

PART ELEVATION OF RIGHT CURB & BLOCKOUT

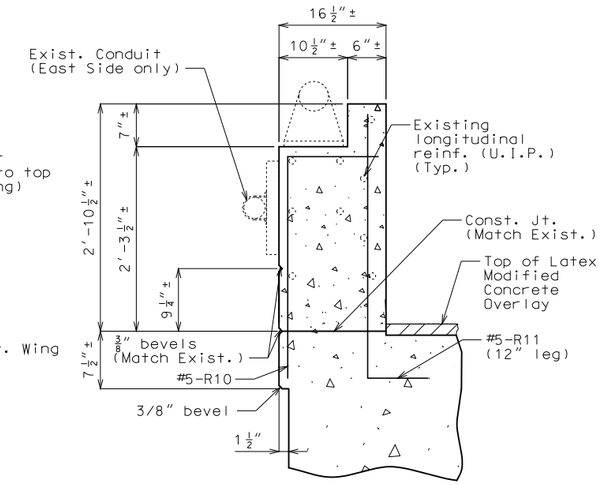

PART SECTION A-A
SHOWING
REINFORCEMENT

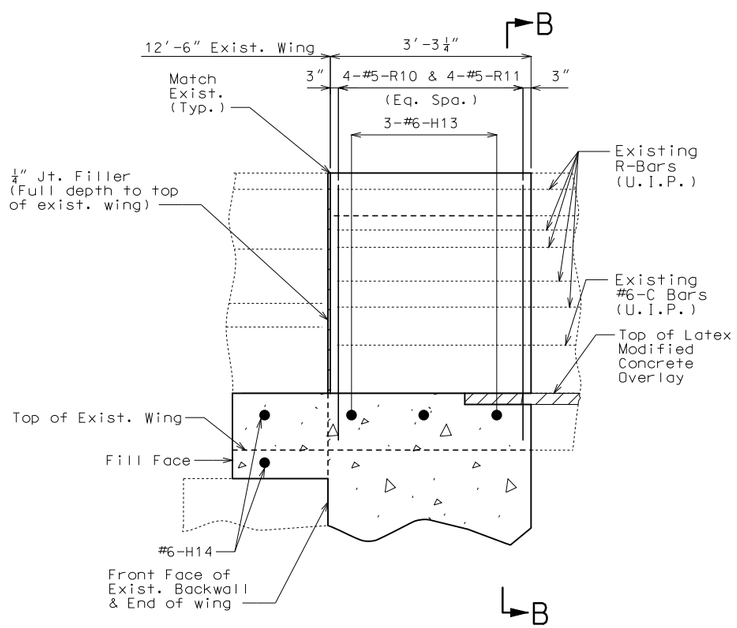

PART ELEVATION OF LEFT CURB & BLOCKOUT

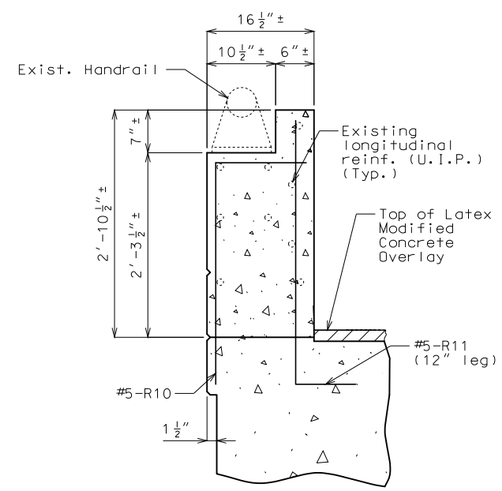

PART SECTION B-B
SHOWING
REINFORCEMENT

Note:

If existing rail post attachment is within length of curb and parapet being removed and replaced, then rail post shall be reattached to new parapet. Contractor may clean and reuse existing anchor bolts as approved by the engineer or replace the anchor bolts with like kind. Cost of rail post attachment will be considered completely covered by the contract unit price for Remove and Replace Curb & Blockout.

Payment for all concrete and reinforcemnt for curb and parapet, complete-in-place, will be considered completely covered by the contract unit price for Remove and Replace Curb & Blockout.

All exposed edges of the new curb and parapet shall match existing curb and parapet.

All concrete for curb and parapet shall be Class B-1.

DETAILS OF CURB REPLACEMENT AT END BENT NO. 1

Detailed Aug. 2016
Checked Sep. 2016

Note: This drawing is not to scale. Follow dimensions.

STATE OF MISSOURI
DAVID JAMES HAGEMEYER
NUMBER PE-2007002788
PROFESSIONAL ENGINEER
THIS SHEET HAS BEEN SIGNED, SEALED AND DATED ELECTRONICALLY.

DATE PREPARED	10/6/2016
ROUTE	I-55
STATE	MO
DISTRICT	BR
SHEET NO.	6
COUNTY	JEFFERSON
JOB NO.	J6I3131
CONTRACT ID.	
PROJECT NO.	
BRIDGE NO.	A22214

DESCRIPTION	DATE

MISSOURI HIGHWAYS AND TRANSPORTATION COMMISSION
105 WEST CAPITOL
JEFFERSON CITY, MO 65102
1-888-ASK-MODOT (1-888-275-6636)

IF A SEAL IS PRESENT ON THIS SHEET IT HAS BEEN ELECTRONICALLY SEALED AND DATED.

BILL OF REINFORCING STEEL

NO. REQ'D.	MARK NO. SIZE	MARK NO. MARK	LOCATION	EPOXY (E)	SHAPE NO.	STIRRUP (S)	SUBSTR. (X)	VARIES (V)	NO. EACH	B FT. IN.	C FT. IN.	D FT. IN.	E FT. IN.	F FT. IN.	H FT. IN.	K FT. IN.	NOMINAL LENGTH FT. IN.	ACTUAL LENGTH FT. IN.	WEIGHT LBS.
			END BENT 1																
5	6	H10	DIAPHRAGM	E	20					57 4.000							57 4	57 4	431
5	6	H11	DIAPHRAGM	E	14					3 4.250	7.750	2 9.125			22.375	2 0.500	6 9	6 7	49
5	6	H12	DIAPHRAGM	E	23					2 0.500	3 1.000				18.125	16.500	5 2	5 1	38
3	6	H13	DIAPHRAGM	E	20					58 2.000							58 2	58 2	262
2	6	H14	DIAPHRAGM	E	20					54 9.000							54 9	54 9	164
49	5	U10	DIAPHRAGM	E	11	S					4 1.750	4 4.375	14.000				9 8	9 6	486
1	5	U11	DIAPHRAGM	E	11	S					4 1.750	3 4.625	4 1.750				11 8	11 6	12
1	5	U12	DIAPHRAGM	E	11	S					4 1.750	2 10.875	4 1.750				11 2	11 0	11
1	5	U13	DIAPHRAGM	E	11	S					4 1.750	2 2.875	4 1.750				10 6	10 4	11
			END BENT 4																
4	6	H40	BACKWALL	E	20					57 9.000							57 9	57 9	347
3	6	S40	SLAB	E	20					57 9.000							57 9	57 9	260
			CURB																
8	5	R10	CURB	E	19	S				2 7.000	13.500						3 9	3 7	30
8	5	R11	CURB	E	19	S				3 2.000	12.000						4 2	4 1	34
10	5	R40	CURB	E	19	S				2 7.000	13.500						3 9	3 7	37
10	5	R41	CURB	E	19	S				3 2.000	12.000						4 2	4 1	43
			TOTALS																
	5			E															664
	6			E															1551
			TOTAL																0
			TOTAL	E															2215
			Slab on Girder																
	5			E															664
	6			E															1551
			TOTAL																2215

BILL OF REINFORCING STEEL

NO. REQ'D.	MARK NO. SIZE	MARK NO. MARK	LOCATION	EPOXY (E)	SHAPE NO.	STIRRUP (S)	SUBSTR. (X)	VARIES (V)	NO. EACH	B FT. IN.	C FT. IN.	D FT. IN.	E FT. IN.	F FT. IN.	H FT. IN.	K FT. IN.	NOMINAL LENGTH FT. IN.	ACTUAL LENGTH FT. IN.	WEIGHT LBS.

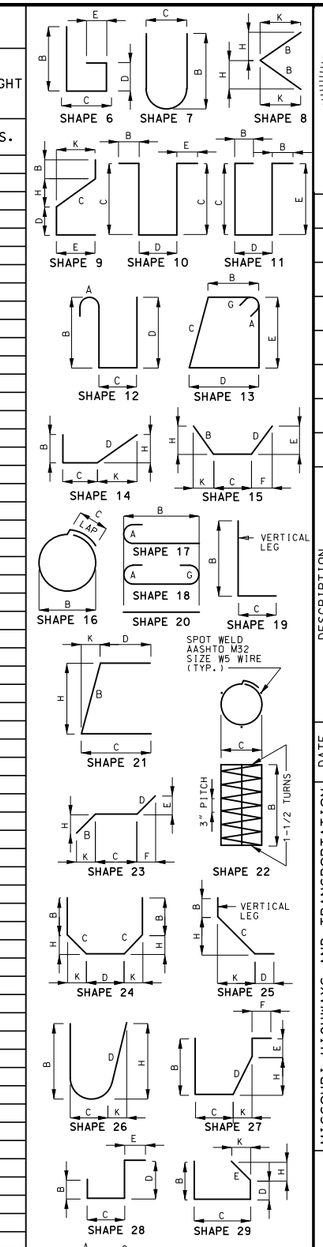

STATE OF MISSOURI
DAVID JAMES HAGEMEYER
NUMBER PE-2007002788
PROFESSIONAL ENGINEER

THIS SHEET HAS BEEN SIGNED, SEALED AND DATED ELECTRONICALLY.

DATE PREPARED 10/6/2016

ROUTE	STATE
I-55	MO

DISTRICT	SHEET NO.
BR	7

COUNTY: JEFFERSON

JOB NO. J6I3131

CONTRACT ID.

PROJECT NO.

BRIDGE NO. A22214

DESCRIPTION	DATE

IF A SEAL IS PRESENT ON THIS SHEET IT HAS BEEN ELECTRONICALLY SEALED AND DATED.

MISSOURI HIGHWAYS AND TRANSPORTATION COMMISSION
105 WEST CAPITOL
JEFFERSON CITY, MO 65102
1-888-ASK-MODOT (1-888-275-6636)

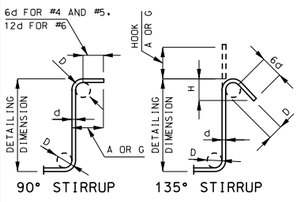

STIRRUP HOOK DIMENSIONS				
GRADES 40 - 50 - 60 KSI				
BAR SIZE	D (IN.)	90° HOOK	135° HOOK	
		HOOK A OR G	HOOK A OR G	APPROX. H
#4	2"	4 1/2"	4 1/2"	3"
#5	2 1/2"	6"	5 1/2"	3 3/4"
#6	4 1/2"	12"	8"	4 1/2"

NOTE: UNLESS OTHERWISE NOTED, DIAMETER "D" IS THE SAME FOR ALL BENDS AND HOOKS ON A BAR.

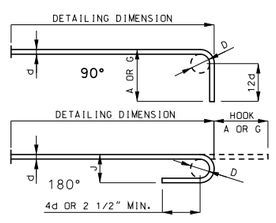

END HOOK DIMENSIONS				
BAR SIZE	D (IN.)	ALL GRADES		
		180° HOOKS		90° HOOKS
		A OR G	J	A OR G
#3	2 1/4"	5"	3"	6"
#4	3"	6"	4"	8"
#5	3 3/4"	7"	5"	10"
#6	4 1/2"	8"	6"	12"
#7	5 1/4"	10"	7"	14"
#8	6"	11"	8"	16"
#9	9 1/2"	15"	11 3/4"	19"
#10	10 3/4"	17"	13 1/4"	22"
#11	12"	19"	14 3/4"	2'-0"
#14	18 1/4"	2'-3"	21 3/4"	2'-7"

NOTE:
ALL STANDARD HOOKS AND BENDS OTHER THAN 180 DEGREE ARE TO BE BENT WITH SAME PROCEDURE AS FOR 90 DEGREE STANDARD HOOKS.
HOOKS AND BENDS SHALL BE IN ACCORDANCE WITH THE PROCEDURES AS SHOWN ON THIS SHEET.
E = EPOXY COATED REINFORCEMENT.
S = STIRRUP.
X = BAR IS INCLUDED IN SUBSTRUCTURE QUANTITIES.
V = BAR DIMENSIONS VARY IN EQUAL INCREMENTS BETWEEN DIMENSIONS SHOWN ON THIS LINE AND THE FOLLOWING LINE.
NO. EA. = NUMBER OF BARS OF EACH LENGTH.
NOMINAL LENGTHS ARE BASED ON OUT TO OUT DIMENSIONS SHOWN IN BENDING DIAGRAMS AND ARE LISTED FOR FABRICATORS USE. (NEAREST INCH)
ACTUAL LENGTHS ARE MEASURED ALONG CENTERLINE BAR TO THE NEAREST INCH.
PAYWEIGHTS ARE BASED ON ACTUAL LENGTHS.
FOUR ANGLE OR CHANNEL SPACERS ARE REQUIRED FOR EACH COLUMN SPIRAL. SPACERS ARE TO BE PLACED ON INSIDE OF SPIRALS. LENGTH AND WEIGHT OF COLUMN SPIRALS DO NOT INCLUDE SPLICES OR SPACERS.
REINFORCING STEEL (GRADE 60) FY = 60,000 PSI.

Detailed Sep. 2016
Checked Sep. 2016

Note: This drawing is not to scale. Follow dimensions.

SEC/SUR 1916 TWP 40N RGE 6E

U.I.P. AND REHAB EXISTING (54′-73′-54′) CONTINUOUS COMPOSITE WIDE FLANGE BEAM SPANS (42° 24′ 00″ RA)

General Notes:

Design Specifications:
2002 AASHTO LFD (17th Ed.) Standard Specifications
Load Factor Design
Bridge Deck Rating = 7

Design Loading:
HS20-44 and Modified 24,000 lb Tandem Axle
(1961 & New Construction)

Design Unit Stresses:

Class B-1 Concrete (Curb and Parapet)	f′c = 4,000 psi
Class B-2 Concrete (Slab)	f′c = 4,000 psi
Reinforcing Steel (Grade 60)	fy = 60,000 psi

Joint Filler:
All joint filler shall be in accordance with Sec 1057 for preformed sponge rubber expansion and partition joint filler, except as noted.

Miscellaneous:
In order to maintain grade and a minimum thickness of overlay as shown on plans it may be necessary to use additional quantities of overlay at various locations throughout the structure. The cost of furnishing and installing the overlay will be considered completely covered in the contract unit price, including all additional labor, materials or equipment for variations in thickness of overlay.

Roadway surfacing adjacent to bridge overlay ends shall match bridge overlay (Roadway Item).

Outline of old work is indicated by light dashed lines. Heavy lines indicate new work.

Contractor shall verify all dimensions in field before ordering new material.

Contractor shall remove all asphalt overlay to existing concrete substrate.

Bars bonded in old concrete not removed shall be cleanly stripped and embedded into new concrete where possible. length is available, old bars shall extend into new concrete at least 40 diameters for plain bars and 30 diameters for deformed bars, unless otherwise noted.

Traffic Handling:
Traffic to be maintained on structure during construction. See Roadway Plans for traffic control and staged construction details.

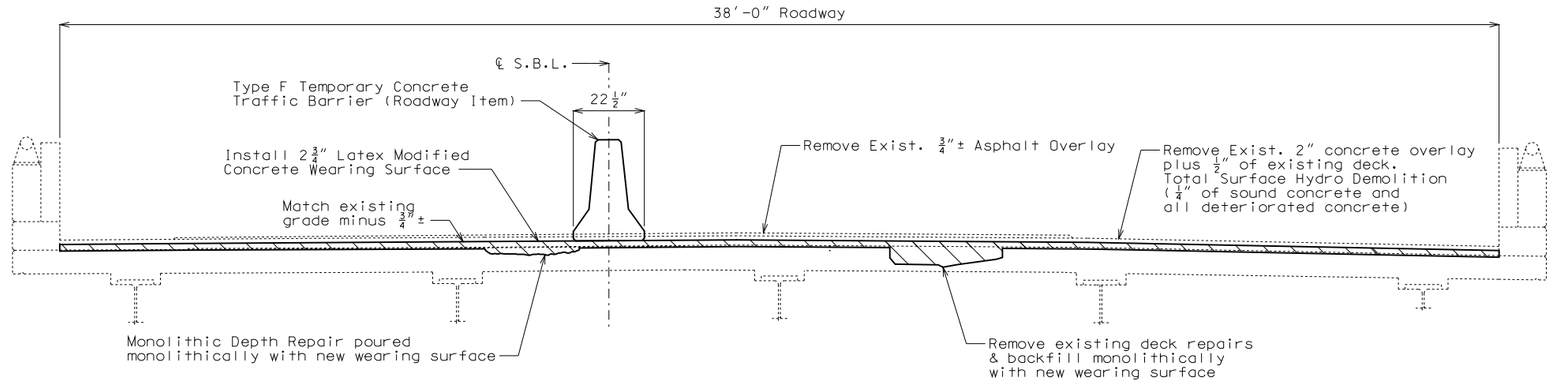

TYPICAL SECTION THRU EXISTING SLAB

Structural Steel Protective Coating:

Protective Coating: System G in accordance with Sec 1081. All existing structural steel including all bearings shall be recoated with System G.

Surface Preparation: Surface preparation of the existing steel shall be in accordance with Sec 1081 for "Recoating of Structural Steel (System G, H or I)". The cost of surface preparation will be considered completely covered by the contract unit price for "Surface Preparation for Recoating Structural Steel".

Prime Coat: The cost of the prime coat will be considered completely covered by the contract unit price for "Field Application of Inorganic Zinc Primer". Tint of the prime coat for System G shall be similar to the color of the field coat to be used.

Field Coats: The color of the field coats shall be Gray (Federal Standard #26373). The cost of the intermediate field coat will be considered completely covered by the contract unit price for "Intermediate Field Coat (System G)". The cost of the finish field coat will be considered completely covered by the contract unit price for "Finish Field Coat (System G)".

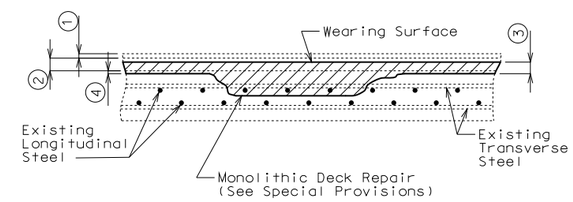

MONOLITHIC DECK REPAIR

1. Remove existing 3/4″ asphalt overlay.
2. Remove existing 2″ concrete overlay plus 1/2″ of original deck.
3. 2 3/4″ (Min.) Latex Modified Concrete Wearing Surface
4. Total surface hydro demolition of existing deck (1/4″ min. of sound concrete and all deteriorated concrete).

Estimated Quantities

	Item		Total
	Removal of Asphalt Wearing Surface	sq. foot	4847
	Removal of Concrete Wearing Surface	sq. foot	7084
	Removal of Existing Deck Repairs	sq. foot	175
*	Partial Removal of Existing Bridge Deck	sq. foot	190
**	Removal of Existing Expansion Joint & Adjacent Concrete	lin. foot	52
	Remove and Replace Curb & Blockout	lin. foot	15
	Latex Modified Concrete Wearing Surface	sq. yard	787
	Class B-2 Concrete	cu. yard	30.2
	Total Surface Hydro Demolition	sq. yard	787
***	Monolithic Deck Repair	cu. yard	7.1
	Reinforcing Steel (Epoxy Coated)	pound	2070
	Protective Coating - Concrete Bents and Piers (Urethane)	lump sum	1
	Rehabilitate Bearings	each	5
	Surface Preparation for Recoating Structural Steel	sq. foot	7500
	Field Application of Inorganic Zinc Primer	sq. foot	7500
	Intermediate Field Coat System (System G)	sq. foot	2000
	Finish Field Coat (System G)	sq. foot	2000
	Strip Seal Expansion Joint System	lin. foot	52

* @ End Bent No. 1
** @ End Bent No. 4
*** Monolithic Deck Repairs will be made at a fixed unit price (See Job Special Provisions).

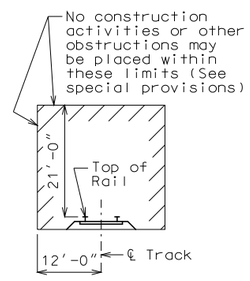

MINIMUM CONSTRUCTION CLEARANCES
(Normal to railroad)
(Not to scale)

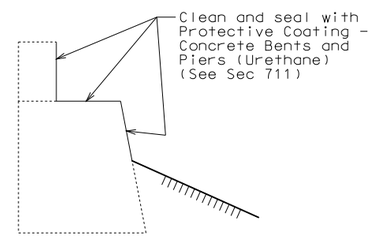

TYPICAL SECTION THRU END BENT 4 SHOWING PROTECTIVE COATING

REPAIRS TO BRIDGE: I-55 SB OVER UNION PACIFIC RR
ROUTE I-55 FROM ROUTE 61 SOUTH
ABOUT 0.6 MILE S.E. OF ROUTE 61
STA. 1009+52.26± (Match Existing)

STD. 617.20
STD. 706.35

Detailed Sep. 2016
Checked Sep. 2016

Note: This drawing is not to scale. Follow dimensions.

STATE OF MISSOURI
DAVID JAMES HAGEMEYER
NUMBER PE-2007002788
PROFESSIONAL ENGINEER
THIS SHEET HAS BEEN SIGNED, SEALED AND DATED ELECTRONICALLY.

DATE PREPARED 10/6/2016
ROUTE I-55 | STATE MO
DISTRICT BR | SHEET NO. 1
COUNTY JEFFERSON
JOB NO. J6I3131
CONTRACT ID.
PROJECT NO.
BRIDGE NO. A22215

DESCRIPTION | DATE

MISSOURI HIGHWAYS AND TRANSPORTATION COMMISSION
105 WEST CAPITOL
JEFFERSON CITY, MO 65102
1-888-ASK-MODOT (1-888-275-6636)

IF A SEAL IS PRESENT ON THIS SHEET IT HAS BEEN ELECTRONICALLY SEALED AND DATED.

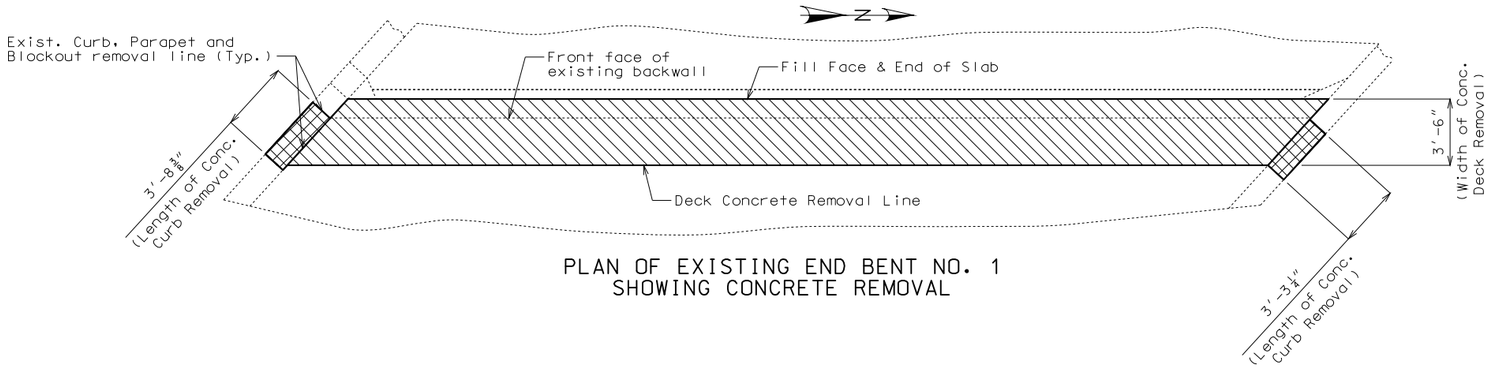

PLAN OF EXISTING END BENT NO. 1
SHOWING CONCRETE REMOVAL

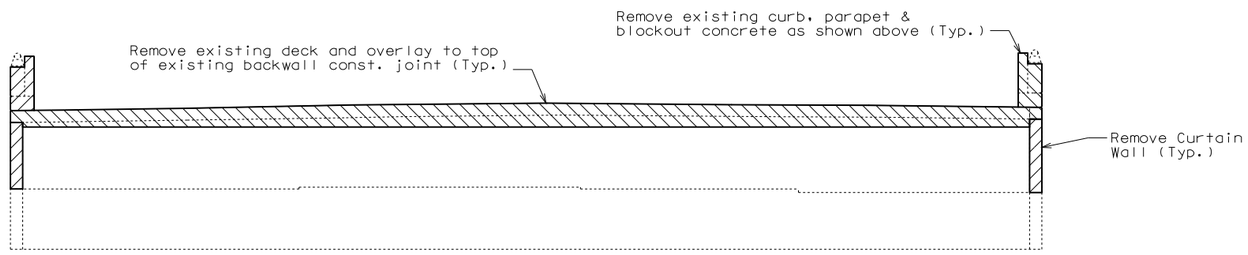

ELEVATION LOOKING BACK STATION AT EXISTING
END BENT NO. 1 SHOWING CONCRETE REMOVAL

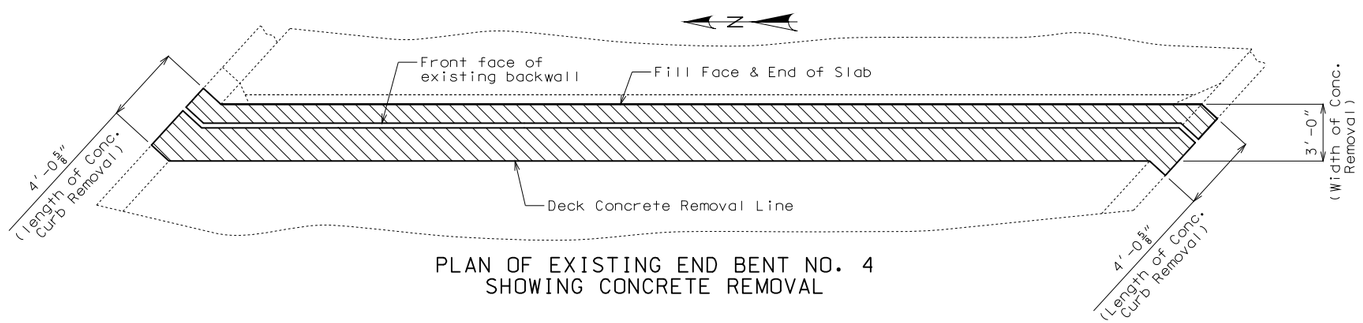

PLAN OF EXISTING END BENT NO. 4
SHOWING CONCRETE REMOVAL

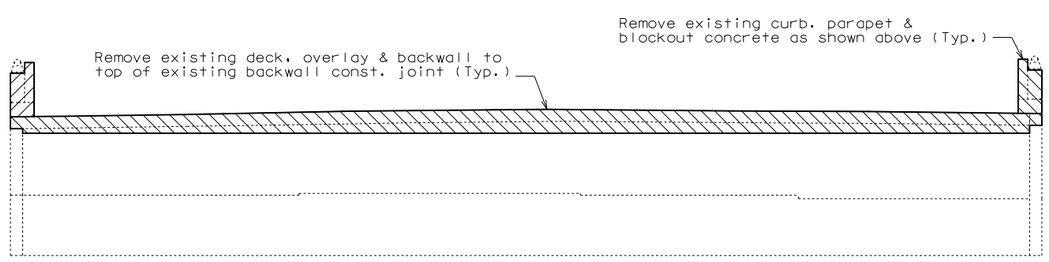

ELEVATION LOOKING AHEAD STATION AT EXISTING
END BENT NO. 4 SHOWING CONCRETE REMOVAL

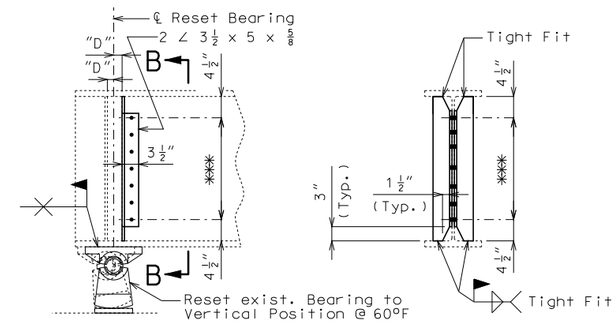

DETAIL SHOWING RESET BEARINGS AT END BENT NO. 4 SECTION B-B

(See Job Special Provisions)

*** Seven 13/16"Ø Holes @ abt. 3 3/4" cts. for 3/4"Ø H.S. Bolts, nuts and washers.

Notes: Bearings shall be adjusted from vertical 1/2", measured at the top of flange, towards backwall or away from backwall for each 10° rise or fall in temperature from 60°F.

Place outstanding leg of angle as close as possible to ℄ of reset bearing.

Fabricated structural steel shall be ASTM A709 Grade 50, except as noted.

The end diaphragms shall be used in same position.

New bearing stiffener not required if "D" < 0.75".

Existing bearings at End Bent No. 4 shall be removed, cleaned, recoated and placed back in their original position. Payment for removing, cleaning and recoating will be considered completely covered by the contract unit price for Rehabilitate Bearings. See Special Provisions.

Notes:

The cost of bridge deck concrete removal as shown at End Bent No. 1 will be considered completely covered by the contract unit price for Partial Removal of Existing Bridge Deck.

The cost of curb, parapet & blockout concrete removal at End Bent No. 1 and 4 as shown will be considered completely covered by the contract unit price for Remove and Replace Curb & Blockout.

The cost of removing existing expansion joint and slab concrete at End bent No. 4 will be considered completely covered by the contract unit price for Removal of Existing Expansion Joint & Adjacent Concrete.

Contractor shall prevent damage to the existing conduit while removing and replacing curb, parapet and blockout at end bents. The cost of maintaining the attachment of existing conduit will be considered completely covered by the contract unit price for Remove and Replace Curb & Blockout.

STATE OF MISSOURI
DAVID JAMES HAGEMEYER
NUMBER PE-2007002788
PROFESSIONAL ENGINEER

THIS SHEET HAS BEEN SIGNED, SEALED AND DATED ELECTRONICALLY.

DATE PREPARED	
10/6/2016	
ROUTE: I-55	STATE: MO
DISTRICT: BR	SHEET NO.: 2
COUNTY: JEFFERSON	
JOB NO.: J6I3131	
CONTRACT ID.	
PROJECT NO.	
BRIDGE NO.: A22215	

DATE	DESCRIPTION

MISSOURI HIGHWAYS AND TRANSPORTATION COMMISSION
105 WEST CAPITOL
JEFFERSON CITY, MO 65102
1-888-ASK-MODOT (1-888-275-6636)

IF A SEAL IS PRESENT ON THIS SHEET IT HAS BEEN ELECTRONICALLY SEALED AND DATED.

Detailed Sep. 2016
Checked Sep. 2016

Note: This drawing is not to scale. Follow dimensions.

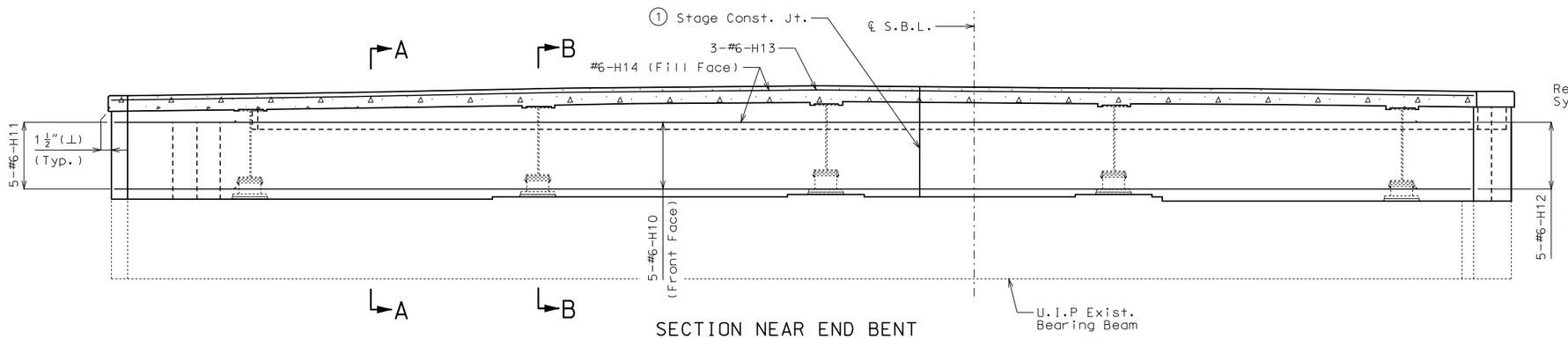

SECTION NEAR END BENT

(Resin anchor systems and #5-U10, #5-U11, #5-U12 & #5-U13 bars not shown for clarity)

Concrete Wearing Surface not shown for clarity.

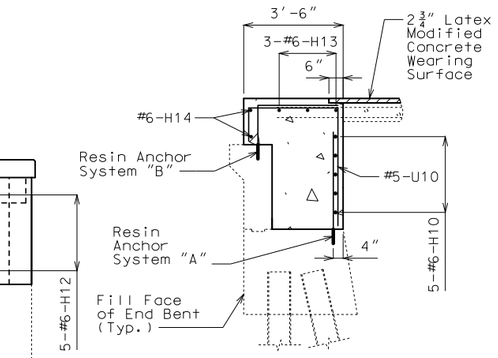

SECTION A-A

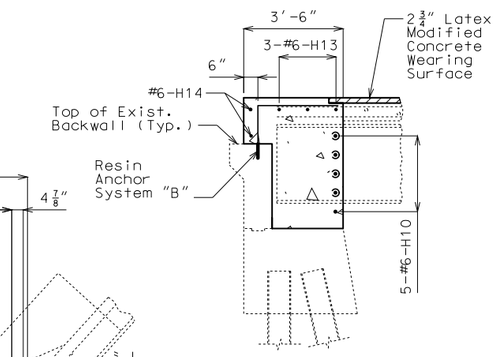

SECTION B-B

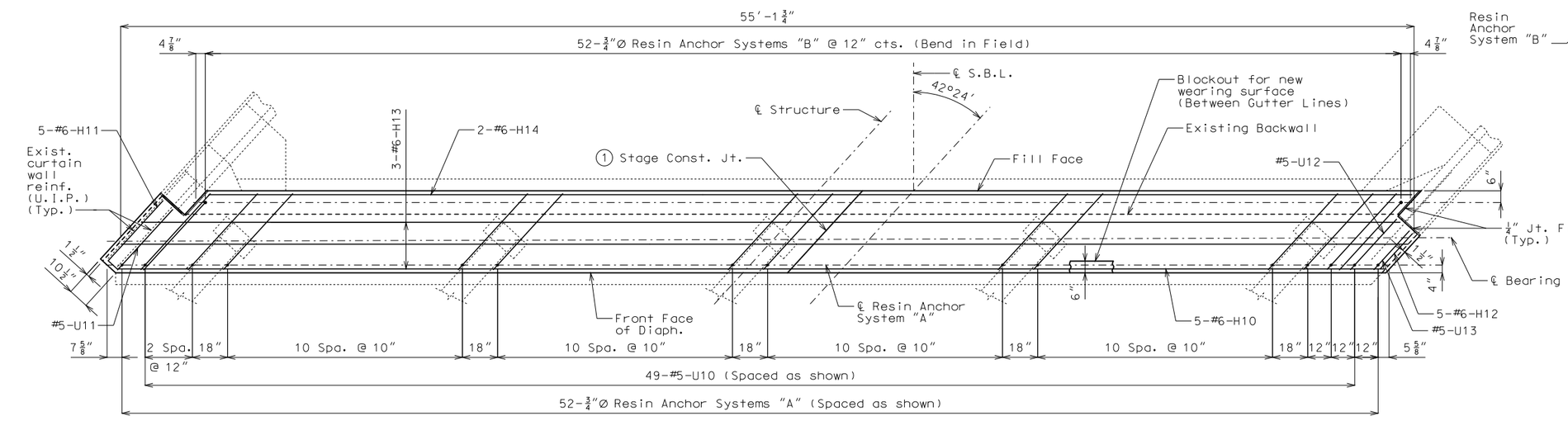

PART PLAN

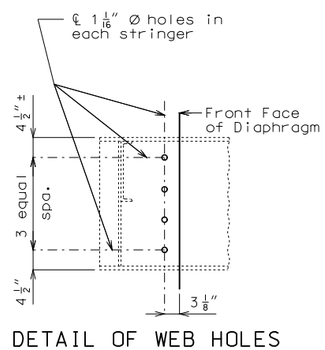

DETAIL OF WEB HOLES AT END BENTS

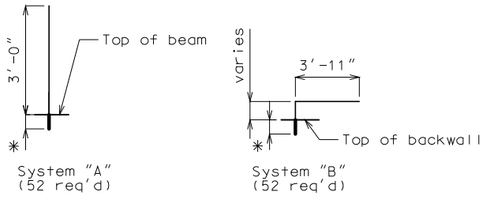

✳ Manufacturer's recommended embedment length (5" min.)

DETAILS OF RESIN ANCHOR SYSTEMS

1 Stage Const. Jt. location to be determined by the contractor with the approval of the Engineer.

Notes:

The contractor shall use one of the qualified resin anchor systems in accordance with Sec 1039.

Cost of furnishing and installing the resin anchor systems shown, complete-in-place, will be considered completely covered by the contract unit price for Class B-2 Concrete.

The minimum embedment depth in concrete with f'c = 4,000 psi for the resin anchor system shall be that required to meet the minimum ultimate pullout strength in accordance with Sec 1039 but shall not be less than 5".

An epoxy coated #6 Grade 60 reinforcing bar shall be substituted for the 3/4"Ø threaded rod.

The exposed and accessible surfaces of the existing structural steel and bearings that will be encased in concrete shall be cleaned with a minimum of SSPC-SP-2 surface preparation before concrete is poured. Payment for cleaning steel to be encased in concrete will be considered completely covered by the contract unit price for Class B-2 Concrete.

Notes (cont.):

Slab concrete removal at end bents necessary to make the end bents integral will be considered completely covered by the contract unit price for Partial Removal of Existing Bridge Deck.

The #6-H10, #6-H13 & #6-H14 bars to be segmented to accommodate stage construction. The total bar length for #6-H10, #6-H13 & #6-H14 bars shown in Bill of Reinforcing Steel allows for one lap splice with a length of 3'-6". Actual bar segment lengths to be determined by contractor. The contractor may use a mechanical bar splice in lieu of a lap splice. When a mechanical bar splice is used, the actual bar segment length will be determined by the contractor to accommodate manufacturer's recommendations for installation and stage construction. The cost of furnishing and installing the bar splices will be considered completely covered by the contract unit price for Reinforcing Steel. No adjustment of the quantity of reinforcing steel will be allowed for the use of mechanical bar splices.

Cost of field drilling holes in existing wide flange beam webs will be considered completely covered by the contract unit price for Class B-2 Concrete.

DETAILS OF END BENT NO. 1

Detailed Sep. 2016
Checked Sep. 2016

Note: This drawing is not to scale. Follow dimensions.

STATE OF MISSOURI
DAVID JAMES HAGEMEYER
NUMBER PE-2007002788
PROFESSIONAL ENGINEER

THIS SHEET HAS BEEN SIGNED, SEALED AND DATED ELECTRONICALLY.

DATE PREPARED	
10/6/2016	
ROUTE	STATE
I-55	MO
DISTRICT	SHEET NO.
BR	3
COUNTY	
JEFFERSON	
JOB NO.	
J6I3131	
CONTRACT ID.	
PROJECT NO.	
BRIDGE NO.	
A22215	

DATE	DESCRIPTION

IF A SEAL IS PRESENT ON THIS SHEET IT HAS BEEN ELECTRONICALLY SEALED AND DATED.

MISSOURI HIGHWAYS AND TRANSPORTATION COMMISSION
105 WEST CAPITOL
JEFFERSON CITY, MO 65102
1-888-ASK-MODOT (1-888-275-6636)

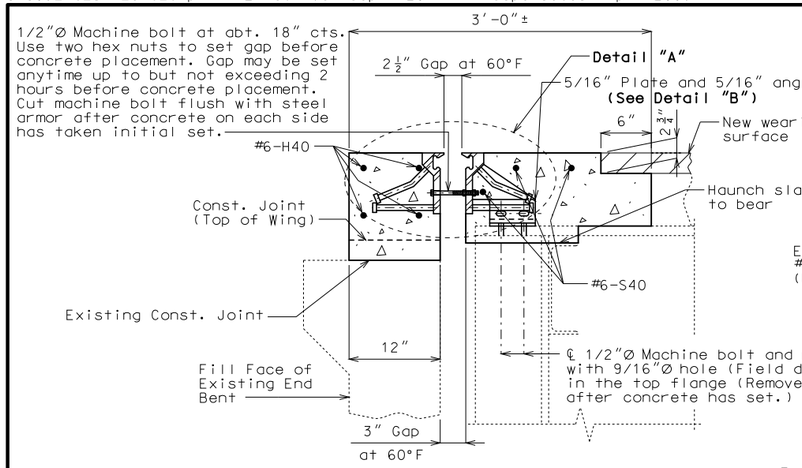

SECTION D-D

Note: Strip seal gland not shown for clarity.

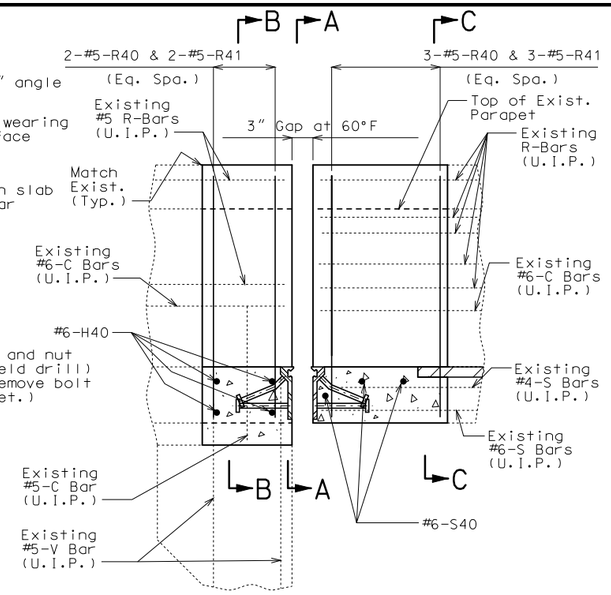

PART ELEVATION OF BARRIER CURB

Notes: Strip seal gland not shown for clarity.

GENERAL NOTES:

Expansion joint system shall be fabricated in one section, except for stage construction and when the length is over 50 feet. A complete joint penetration groove welded splice shall be required. Welds shall be ground flush to provide a smooth surface. The expansion joint system shall be fabricated and installed to the crown and grade of the roadway.

The strip seal gland shall be installed in joints in one continuous piece without field splices. Factory splicing will be permitted for joints in excess of 53 feet.

Structural steel for the expansion joint system shall be ASTM A709 Grade 36 except the steel armor may be ASTM A709 Grade 50W. Anchors for the expansion joint system shall be in accordance with Sec 1037. Strip seal expansion joint system shall be in accordance with Sec 717.

Structural steel for the expansion joint system shall be coated with a minimum of two coats of inorganic zinc primer (5 mils minimum) or galvanized in accordance with ASTM A123. Anchors need not be protected from overspray.

Plan dimensions are based on installation at 60°F. The expansion gap and other dimensions shall be increased or decreased 1/8" for each 10° fall or rise in temperature at installation.

Existing longitudinal reinforcing steel shall be cut/bent so that ends shall not be more than ±1" from vertical leg of the steel armor at the expansion joint system.

Concrete shall be forced under and around steel armor and anchors. Proper consolidation of the concrete shall be achieved by localized internal vibration.

Top of backwall for End Bent No. 4 shall be formed to the crown and grade of the roadway.

All concrete above the upper construction joint in backwall shall be Class B-2.

Payment for all concrete and reinforcement for curb & blockout, complete-in-place, will be considered completely covered by the contract unit price for Remove and Replace Curb & Blockout.

All exposed edges of the new curb and blockout shall match existing curb, parapet, blockout and end post.

Bars bonded in old concrete not removed shall be cleanly stripped and embedded into new concrete where possible.

Work this sheet with Sheet No. 5.

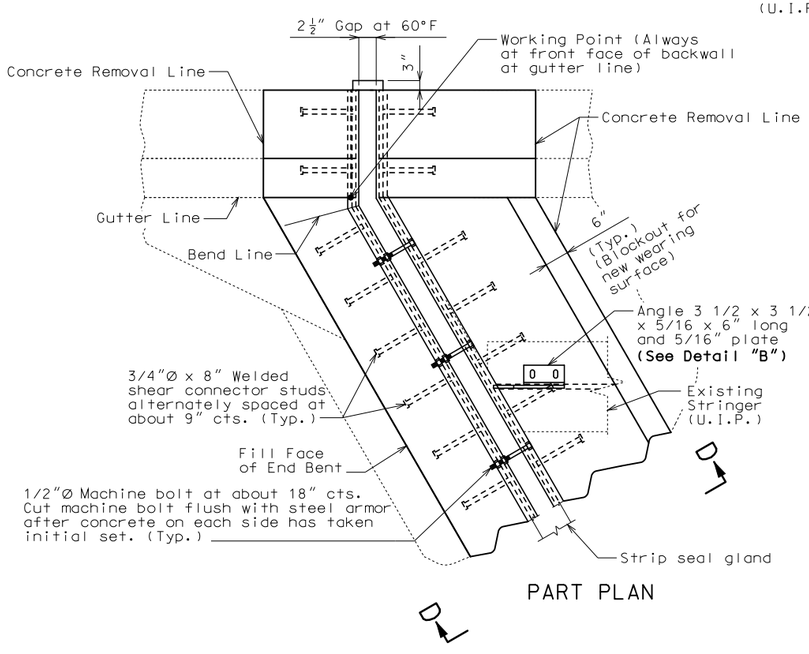

PART PLAN

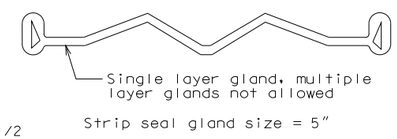

DETAIL OF GLAND

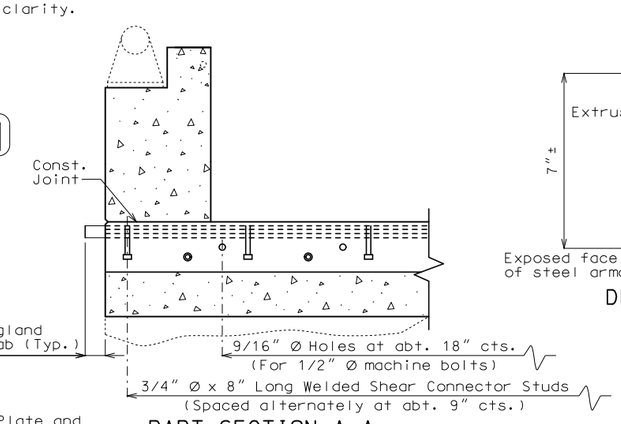

PART SECTION A-A

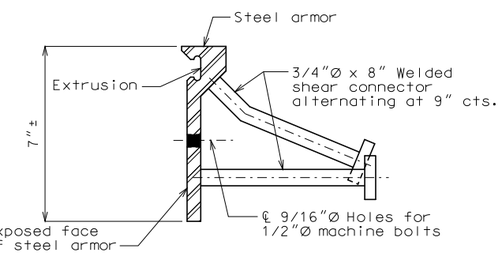

DETAIL OF JOINT ARMOR

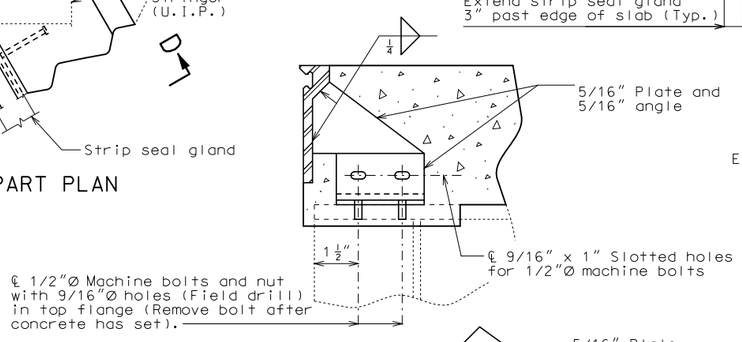

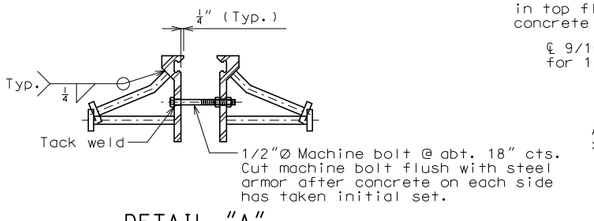

DETAIL "A"

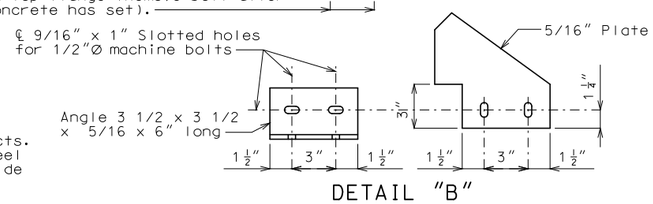

DETAIL "B"

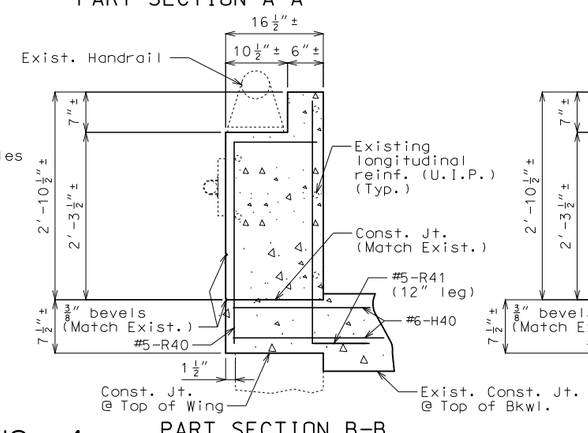

PART SECTION B-B SHOWING REINFORCEMENT

(Strip Seal not shown for clarity)

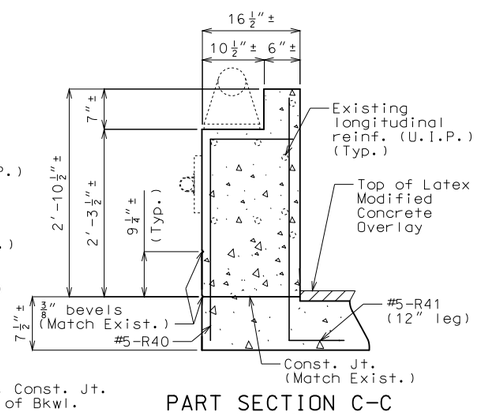

PART SECTION C-C SHOWING REINFORCEMENT

(Strip Seal not shown for clarity)

DETAILS OF STRIP SEAL AT END BENT NO. 4

Note: This drawing is not to scale. Follow dimensions.

Detailed Sep. 2016
Checked Sep. 2016

STATE OF MISSOURI
DAVID JAMES HAGEMEYER
NUMBER PE-2007002788
PROFESSIONAL ENGINEER

THIS SHEET HAS BEEN SIGNED, SEALED AND DATED ELECTRONICALLY.

DATE PREPARED	
10/6/2016	
ROUTE	STATE
I-55	MO
DISTRICT	SHEET NO.
BR	4
COUNTY	
JEFFERSON	
JOB NO.	
J6I3131	
CONTRACT ID.	
PROJECT NO.	
BRIDGE NO.	
A22215	

DATE	DESCRIPTION

IF A SEAL IS PRESENT ON THIS SHEET IT HAS BEEN ELECTRONICALLY SEALED AND DATED.

MISSOURI HIGHWAYS AND TRANSPORTATION COMMISSION
105 WEST CAPITOL
JEFFERSON CITY, MO 65102
1-888-ASK-MODOT (1-888-275-6636)

Notes:

The #6-H40 & #6-S40 bars to be segmented to accommodate stage construction. The total bar length for #6-H40 & #6-S40 bars shown in Bill of Reinforcing Steel allows for one lap splice with a length of 3'-6". Actual bar segment lengths to be determined by contractor. The contractor may use a mechanical bar splice in lieu of a lap splice. When a mechanical bar splice is used, the actual bar segment length will be determined by the contractor to accommodate manufacturer's recommendations for installation and stage construction. The cost of furnishing and installing the bar splices will be considered completely covered by the contract unit price for Reinforcing Steel. No adjustment of the quantity of reinforcing steel will be allowed for the use of mechanical bar splices.

Cost of removing existing expansion joint and slab concrete within the limits shown will be considered completely covered bt the contract unit price for Removal of Existing Expansion Joint & Adjacent Concrete.

For location of slab construction joint, see Roadway Plans for traffic control.

For details of strip seal expansion joint system at End Bent No. 4, see Sheet No. 4.

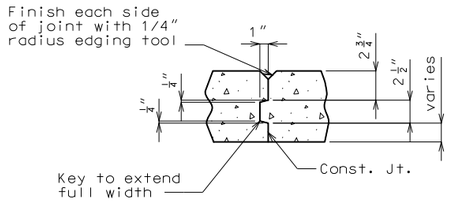

SLAB CONSTRUCTION JOINT DETAIL

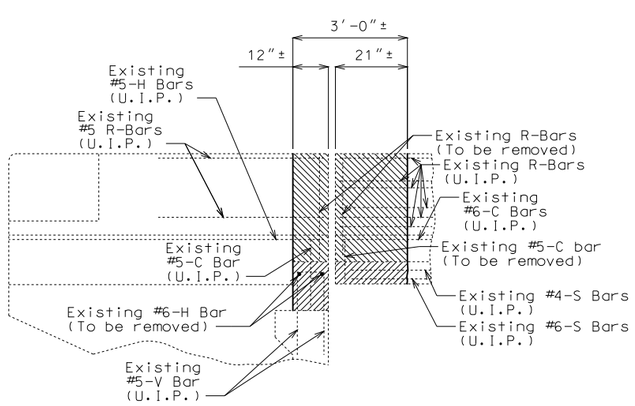

SECTION THRU SLAB AT END BENT NO. 4
SHOWING LIMITS OF CONCRETE REMOVAL

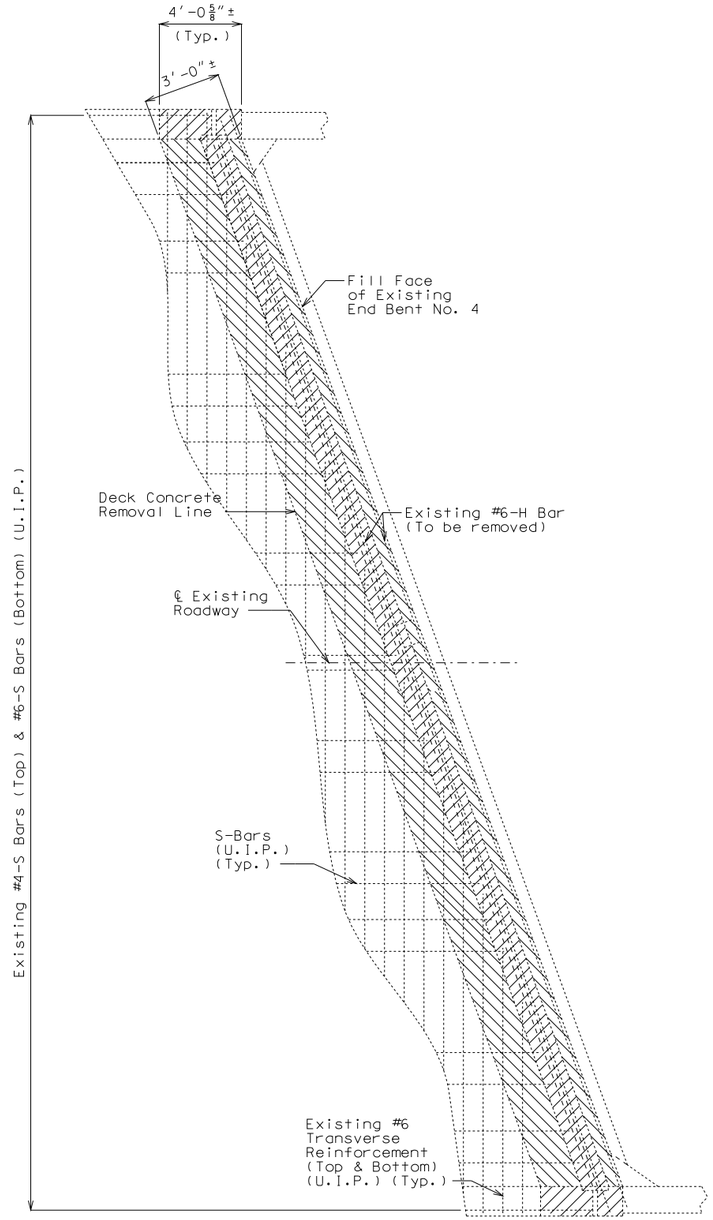

PLAN OF SLAB AT END BENT NO. 4
SHOWING LIMITS OF CONCRETE REMOVAL

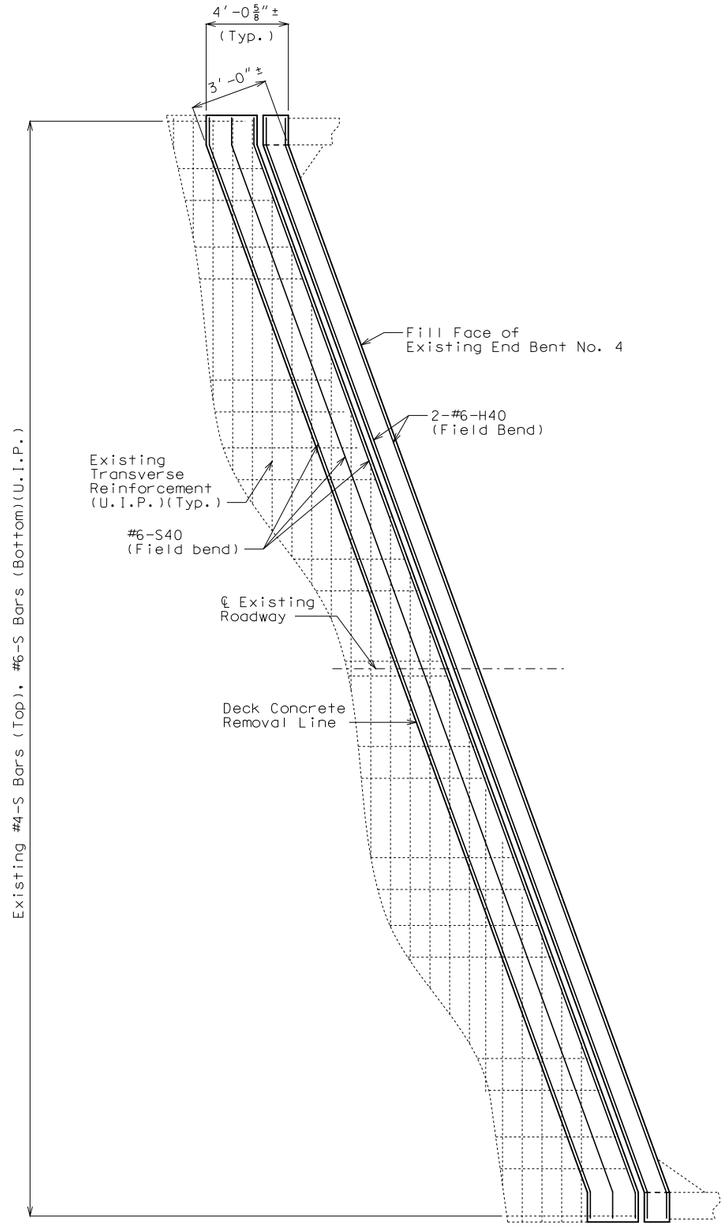

PART PLAN OF SLAB AT END BENT NO. 4
SHOWING NEW CONCRETE AND REINFORCEMENT

EXPANSION DEVICE REPLACEMENT AT END BENT NO. 4

Detailed Sep. 2016
Checked Sep. 2016

Note: This drawing is not to scale. Follow dimensions.

STATE OF MISSOURI
DAVID JAMES HAGEMEYER
NUMBER PE-2007002788
PROFESSIONAL ENGINEER

THIS SHEET HAS BEEN SIGNED, SEALED AND DATED ELECTRONICALLY.

DATE PREPARED	10/6/2016
ROUTE	I-55
STATE	MO
DISTRICT	BR
SHEET NO.	5
COUNTY	JEFFERSON
JOB NO.	J6I3131
CONTRACT ID.	
PROJECT NO.	
BRIDGE NO.	A22215

DESCRIPTION	DATE

MISSOURI HIGHWAYS AND TRANSPORTATION COMMISSION
105 WEST CAPITOL
JEFFERSON CITY, MO 65102
1-888-ASK-MODOT (1-888-275-6636)

IF A SEAL IS PRESENT ON THIS SHEET IT HAS BEEN ELECTRONICALLY SEALED AND DATED.

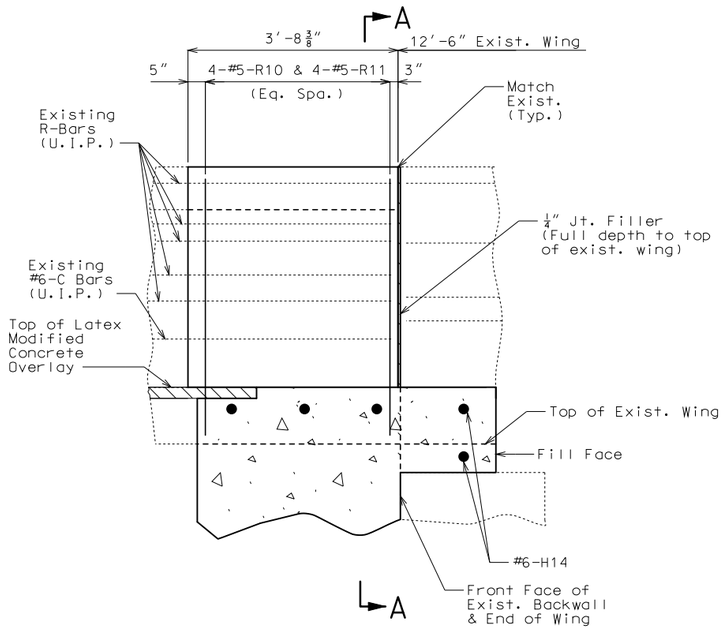

PART ELEVATION OF RIGHT CURB & BLOCKOUT

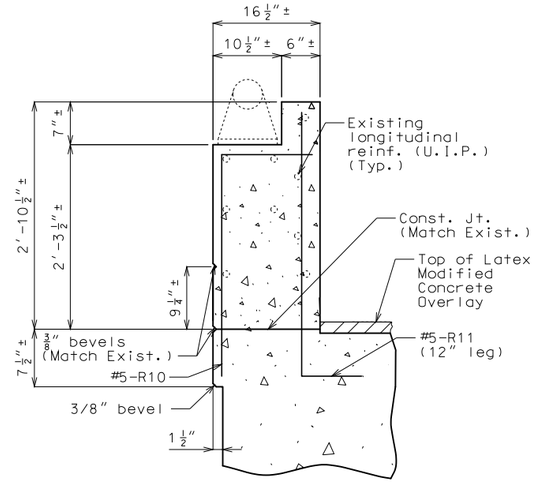

PART SECTION A-A
SHOWING
REINFORCEMENT

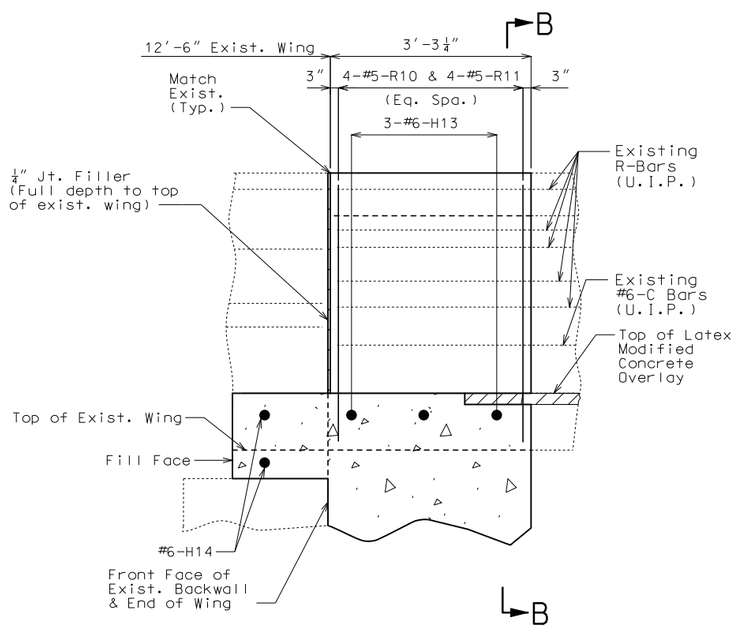

PART ELEVATION OF LEFT CURB & BLOCKOUT

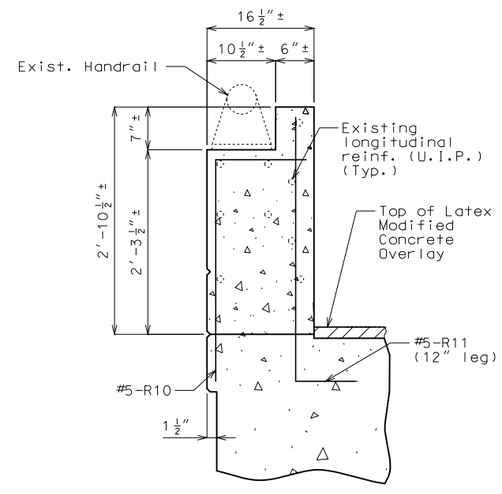

PART SECTION B-B
SHOWING
REINFORCEMENT

Note:

If existing rail post attachment is within length of curb and parapet being removed and replaced, then rail post shall be reattached to new parapet. Contractor may clean and reuse existing anchor bolts as approved by the engineer or replace the anchor bolts with like kind. Cost of rail post attachment will be considered completely covered by the contract unit price for Remove and Replace Curb & Blockout.

Payment for all concrete and reinforcemnt for curb and parapet, complete-in-place, will be considered completely covered by the contract unit price for Remove and Replace Curb & Blockout.

All exposed edges of the new curb and parapet shall match existing curb and parapet.

All concrete for curb and parapet shall be Class B-1.

DETAILS OF CURB REPLACEMENT AT END BENT NO. 1

Detailed Sep. 2016
Checked Sep. 2016

Note: This drawing is not to scale. Follow dimensions.

STATE OF MISSOURI
DAVID JAMES HAGEMEYER
NUMBER PE-2007002788
PROFESSIONAL ENGINEER

THIS SHEET HAS BEEN SIGNED, SEALED AND DATED ELECTRONICALLY.

DATE PREPARED	
10/6/2016	
ROUTE I-55	STATE MO
DISTRICT BR	SHEET NO. 6
COUNTY JEFFERSON	
JOB NO. J6I3131	
CONTRACT ID.	
PROJECT NO.	
BRIDGE NO. A22215	

DATE	DESCRIPTION

MISSOURI HIGHWAYS AND TRANSPORTATION COMMISSION
105 WEST CAPITOL
JEFFERSON CITY, MO 65102
1-888-ASK-MODOT (1-888-275-6636)

IF A SEAL IS PRESENT ON THIS SHEET IT HAS BEEN ELECTRONICALLY SEALED AND DATED.

BILL OF REINFORCING STEEL

NO. REQ'D.	MARK NO. SIZE	MARK NO. MARK	LOCATION	EPOXY (E)	SHAPE NO.	STIRRUP (S)	SUBSTR. (X)	VARIES (V)	NO. EACH	B FT. IN.	C FT. IN.	D FT. IN.	E FT. IN.	F FT. IN.	H FT. IN.	K FT. IN.	NOMINAL LENGTH FT. IN.	ACTUAL LENGTH FT. IN.	WEIGHT LBS.
			END BENT 1																
5	6	H10	DIAPHRAGM	E	20					57 4.000							57 4	57 4	431
5	6	H11	DIAPHRAGM	E	14					3 4.250	7.750	2 9.125			22.375	2 0.500	6 9	6 7	49
5	6	H12	DIAPHRAGM	E	23					2 0.500	3 1.000				18.125	16.500	5 2	5 1	38
3	6	H13	DIAPHRAGM	E	20					58 2.000							58 2	58 2	262
2	6	H14	DIAPHRAGM	E	20					54 9.000							54 9	54 9	164
49	5	U10	DIAPHRAGM	E	11	S					4 1.750	4 4.375	14.000				9 8	9 6	486
1	5	U11	DIAPHRAGM	E	11	S					4 1.750	3 4.625	4 1.750				11 8	11 6	12
1	5	U12	DIAPHRAGM	E	11	S					4 1.750	2 10.875	4 1.750				11 2	11 0	11
1	5	U13	DIAPHRAGM	E	11	S					4 1.750	2 2.875	4 1.750				10 6	10 4	11
			END BENT 4																
4	6	H40	BACKWALL	E	20					57 9.000							57 9	57 9	347
3	6	S40	SLAB	E	20					57 9.000							57 9	57 9	260
			CURB																
8	5	R10	CURB	E	19	S				2 7.000	13.500						3 9	3 7	30
8	5	R11	CURB	E	19	S				3 2.000	12.000						4 2	4 1	34
10	5	R40	CURB	E	19	S				2 7.000	13.500						3 9	3 7	37
10	5	R41	CURB	E	19	S				3 2.000	12.000						4 2	4 1	43
			TOTALS																
	5			E															664
	6			E															1551
			TOTAL																0
			TOTAL	E															2215
			Slab on Girder																
	5			E															664
	6			E															1551
			TOTAL																2215

BILL OF REINFORCING STEEL

NO. REQ'D.	MARK NO. SIZE	MARK NO. MARK	LOCATION	EPOXY (E)	SHAPE NO.	STIRRUP (S)	SUBSTR. (X)	VARIES (V)	NO. EACH	B FT. IN.	C FT. IN.	D FT. IN.	E FT. IN.	F FT. IN.	H FT. IN.	K FT. IN.	NOMINAL LENGTH FT. IN.	ACTUAL LENGTH FT. IN.	WEIGHT LBS.

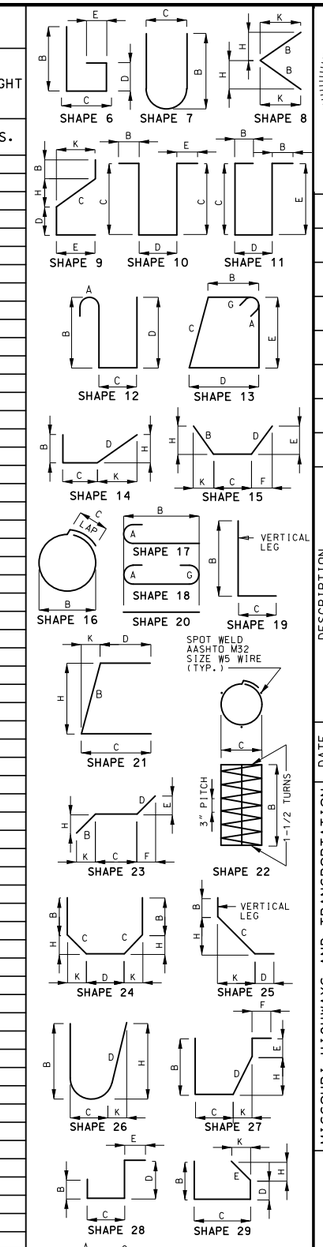

STATE OF MISSOURI
DAVID JAMES HAGEMEYER
NUMBER PE-2007002788
PROFESSIONAL ENGINEER

THIS SHEET HAS BEEN SIGNED, SEALED AND DATED ELECTRONICALLY.

DATE PREPARED 10/6/2016

ROUTE	STATE
I-55	MO

DISTRICT	SHEET NO.
BR	7

COUNTY: JEFFERSON

JOB NO. J6I3131

CONTRACT ID.

PROJECT NO.

BRIDGE NO. A22215

DESCRIPTION

DATE

IF A SEAL IS PRESENT ON THIS SHEET IT HAS BEEN ELECTRONICALLY SEALED AND DATED.

MISSOURI HIGHWAYS AND TRANSPORTATION COMMISSION

105 WEST CAPITOL
JEFFERSON CITY, MO 65102
1-888-ASK-MODOT (1-888-275-6636)

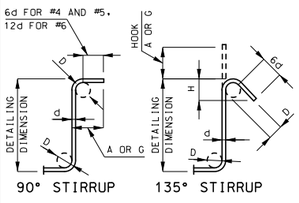

STIRRUP HOOK DIMENSIONS				
GRADES 40 - 50 - 60 KSI				
BAR SIZE	D (IN.)	90° HOOK	135° HOOK	
		HOOK A OR G	HOOK A OR G	APPROX. H
#4	2"	4 1/2"	4 1/2"	3"
#5	2 1/2"	6"	5 1/2"	3 3/4"
#6	4 1/2"	12"	8"	4 1/2"

NOTE: UNLESS OTHERWISE NOTED, DIAMETER "D" IS THE SAME FOR ALL BENDS AND HOOKS ON A BAR.

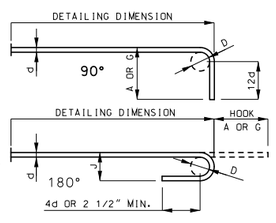

END HOOK DIMENSIONS				
BAR SIZE	D (IN.)	ALL GRADES		
		180° HOOKS		90° HOOKS
		A OR G	J	A OR G
#3	2 1/4"	5"	3"	6"
#4	3"	6"	4"	8"
#5	3 3/4"	7"	5"	10"
#6	4 1/2"	8"	6"	12"
#7	5 1/4"	10"	7"	14"
#8	6"	11"	8"	16"
#9	9 1/2"	15"	11 3/4"	19"
#10	10 3/4"	17"	13 1/4"	22"
#11	12"	19"	14 3/4"	2'-0"
#14	18 1/4"	2'-3"	21 3/4"	2'-7"

NOTE:
ALL STANDARD HOOKS AND BENDS OTHER THAN 180 DEGREE ARE TO BE BENT WITH SAME PROCEDURE AS FOR 90 DEGREE STANDARD HOOKS.
HOOKS AND BENDS SHALL BE IN ACCORDANCE WITH THE PROCEDURES AS SHOWN ON THIS SHEET.
E = EPOXY COATED REINFORCEMENT.
S = STIRRUP.
X = BAR IS INCLUDED IN SUBSTRUCTURE QUANTITIES.
V = BAR DIMENSIONS VARY IN EQUAL INCREMENTS BETWEEN DIMENSIONS SHOWN ON THIS LINE AND THE FOLLOWING LINE.
NO. EA. = NUMBER OF BARS OF EACH LENGTH.
NOMINAL LENGTHS ARE BASED ON OUT TO OUT DIMENSIONS SHOWN IN BENDING DIAGRAMS AND ARE LISTED FOR FABRICATORS USE. (NEAREST INCH)
ACTUAL LENGTHS ARE MEASURED ALONG CENTERLINE BAR TO THE NEAREST INCH.
PAYWEIGHTS ARE BASED ON ACTUAL LENGTHS.
FOUR ANGLE OR CHANNEL SPACERS ARE REQUIRED FOR EACH COLUMN SPIRAL. SPACERS ARE TO BE PLACED ON INSIDE OF SPIRALS. LENGTH AND WEIGHT OF COLUMN SPIRALS DO NOT INCLUDE SPLICES OR SPACERS.
REINFORCING STEEL (GRADE 60) FY = 60,000 PSI.

Detailed Sep. 2016
Checked Sep. 2016

Note: This drawing is not to scale. Follow dimensions.

SEC/SUR 1915 TWP 40N RGE 6E

U.I.P. AND REHAB EXISTING (69'-90'-69') CONTINUOUS COMPOSITE PLATE GIRDER SPANS

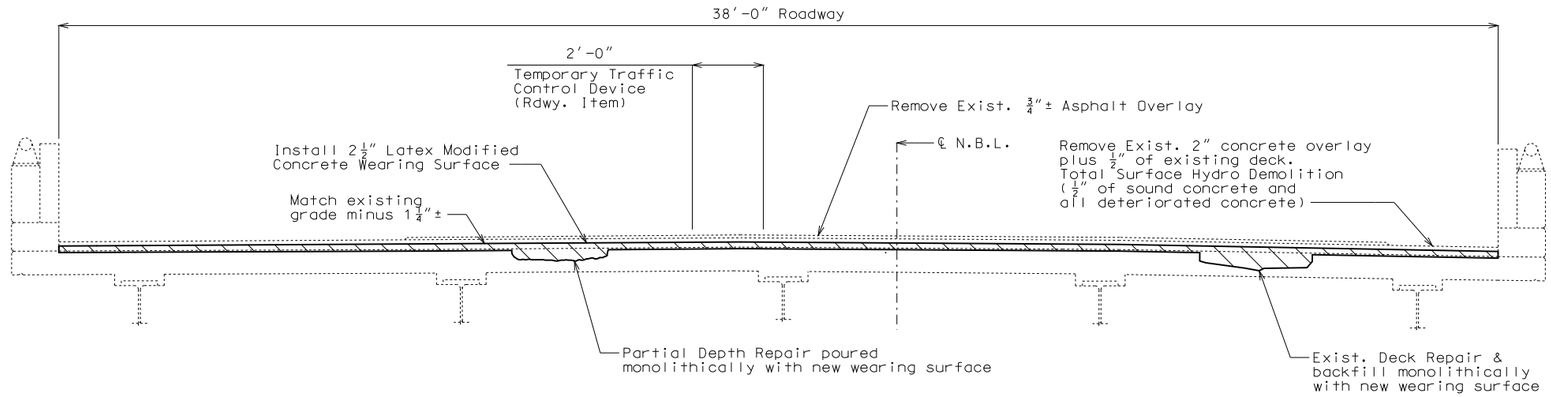

TYPICAL SECTION THRU EXISTING SLAB

General Notes:

Design Specifications:
2002 AASHTO LFD (17th Ed.) Standard Specifications
Load Factor Design
Bridge Deck Rating = 6

Design Loading:
HS20-44 and Modified 24,000 lb Tandem Axle (1965 & New Construction)

Design Unit Stresses:
Class B-1 Concrete f'c = 4,000 psi

Miscellaneous:
In order to maintain grade and a minimum thickness of overlay as shown on plans it may be necessary to use additional quantities of overlay at various locations throughout the structure. The cost of furnishing and installing the overlay will be considered completely covered in the contract unit price, including all additional labor, materials or equipment for variations in thickness of overlay.

Roadway surfacing adjacent to bridge overlay ends shall match bridge overlay (Roadway Item).

Outline of old work is indicated by light dashed lines. Heavy lines indicate new work.

Contractor shall verify all dimensions in field before ordering new material.

Contractor shall remove all asphalt overlay to existing concrete substrate.

Traffic Handling:
Traffic to be maintained on structure during construction. See Roadway Plans for traffic control.

Estimated Quantities

	Item		Total
	Removal of Asphalt Wearing Surface	sq. foot	6020
	Removal of Concrete Wearing Surface	sq. foot	8799
	Removal of Existing Deck Repairs	sq. foot	125
	Latex Modified Concrete Wearing Surface	sq. yard	978
	Total Surface Hydro Demolition	sq. yard	978
	Clean and Epoxy Seal	sq. foot	1585
	Plugging Curb Outlets	each	72
*	Monolithic Deck Repair	cu. yard	8.1
	Cored Slab Drain	each	40

* Monolithic Deck Repairs will be made at a fixed unit price (See Job Special Provisions).

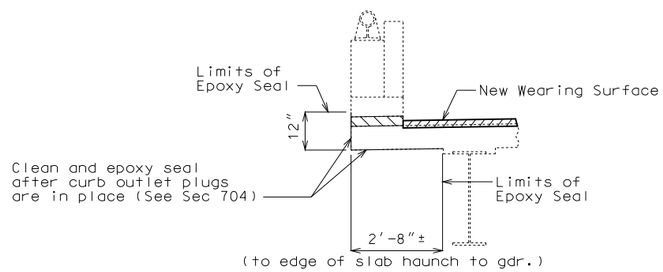

SECTION THRU EDGE OF SLAB
SHOWING CLEAN AND EPOXY SEAL

Note:
All reinforcing steel in slab overhang that is loose and exposed shall be removed as directed by the engineer. Removal of reinforcing steel and loose concrete will be considered completely covered by the contract unit price for Clean and Epoxy Seal.

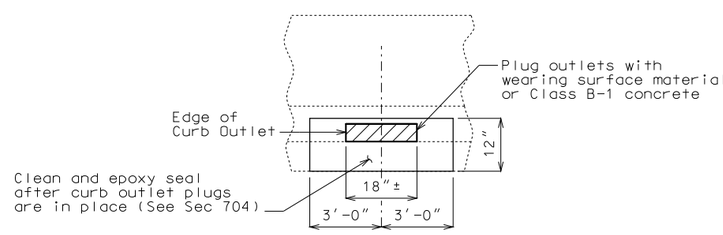

PART ELEVATION SHOWING EXISTING
CURB OUTLETS TO BE PLUGGED &
SHOWING LIMITS OF EPOXY SEAL

Notes:

Cost of labor and materials required to plug existing curb outlets will be considered completely covered by the contract unit price for Plugging Curb Outlet.

Estimated material required to fill all curb outlets is 2.1 cubic yards.

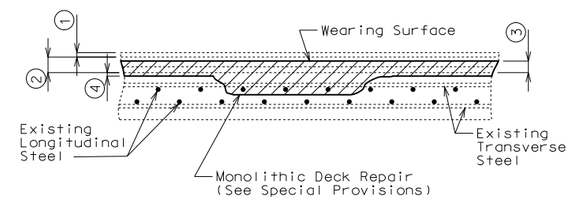

MONOLITHIC DECK REPAIR

1. Remove existing 3/4" asphalt overlay.
2. Remove existing 2" concrete overlay plus 1/2" of original deck.
3. 2 1/2" (Min.) Latex Modified Concrete Wearing Surface
4. Total surface hydro demolition of existing deck 1/2" min. of sound concrete and all deteriorated concrete.

REPAIRS TO BRIDGE: ROUTE I-55 NB OVER PLATTIN CREEK

ROUTE I-55 FROM ROUTE 61 SOUTH

ABOUT 1.0 MILE S.E. OF ROUTE 61

STA. 1027+14.20± (Match Existing)

Detailed Jul. 2016
Checked Sep. 2016

Note: This drawing is not to scale. Follow dimensions.

STATE OF MISSOURI
DAVID JAMES HAGEMEYER
NUMBER PE-2007002788
PROFESSIONAL ENGINEER
THIS SHEET HAS BEEN SIGNED, SEALED AND DATED ELECTRONICALLY.

DATE PREPARED 10/3/2016

ROUTE	STATE
I-55	MO
DISTRICT	SHEET NO.
BR	1

COUNTY JEFFERSON
JOB NO. J6I3131
CONTRACT ID.
PROJECT NO.
BRIDGE NO. A22225

DATE	DESCRIPTION

MISSOURI HIGHWAYS AND TRANSPORTATION COMMISSION
105 WEST CAPITOL
JEFFERSON CITY, MO 65102
1-888-ASK-MODOT (1-888-275-6636)

IF A SEAL IS PRESENT ON THIS SHEET IT HAS BEEN ELECTRONICALLY SEALED AND DATED.

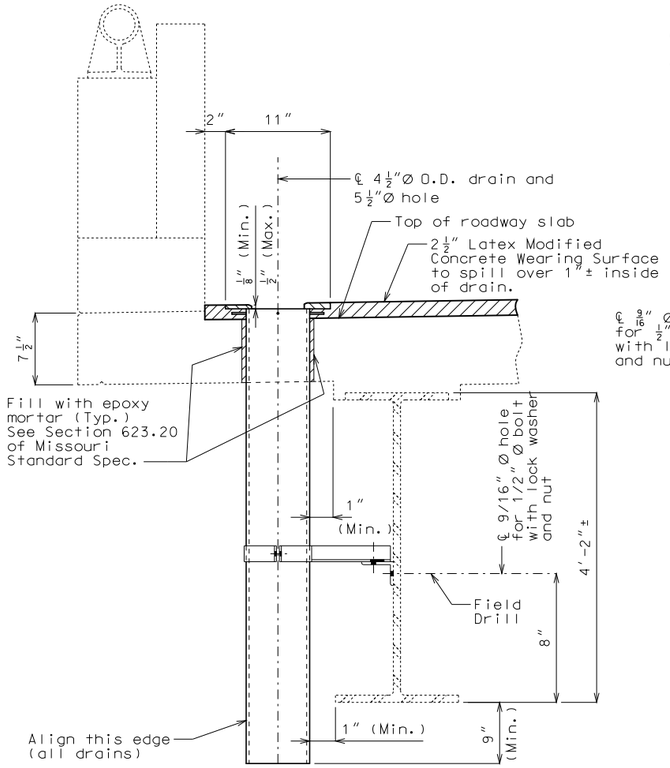

PART SECTION NEAR DRAIN

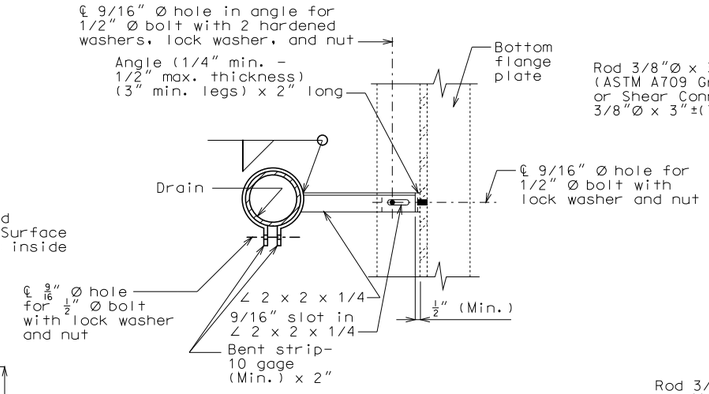

PART SECTION SHOWING BRACKET ASSEMBLY

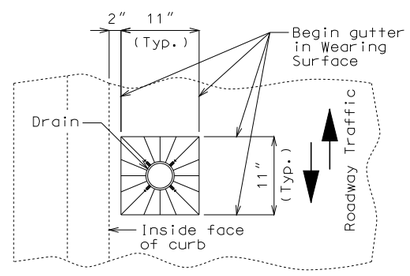

PART PLAN OF SLAB AT DRAIN

SLAB DRAIN DETAILS

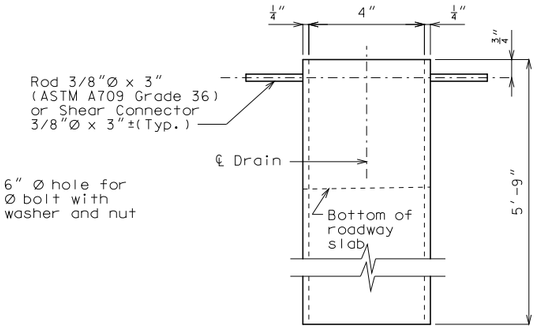

ELEVATION OF DRAIN

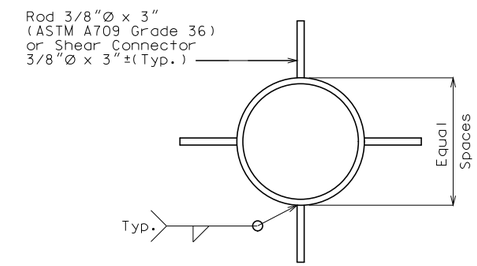

PLAN OF DRAIN

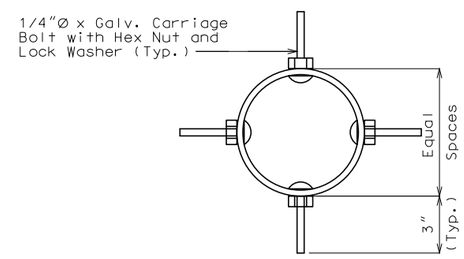

PLAN OF OPTIONAL FRP DRAIN

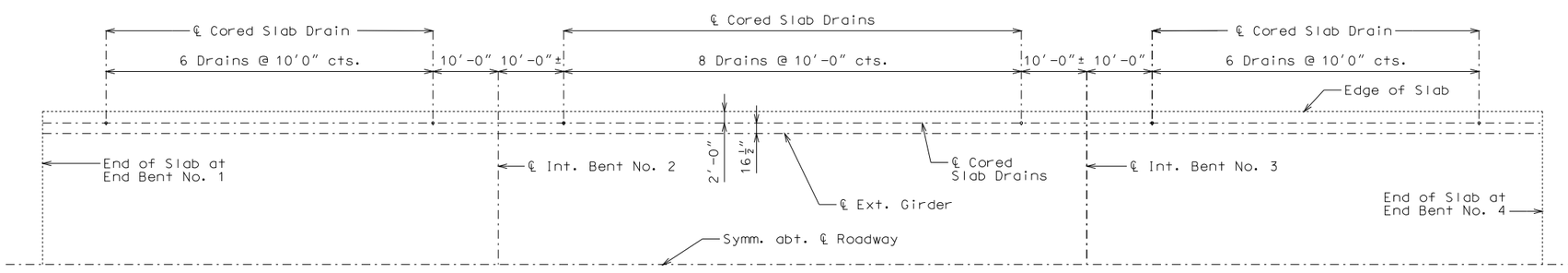

PLAN OF SLAB SHOWING LOCATION OF CORED SLAB DRAINS

General Notes:

Contractor shall have the option to construct either steel or Fiberglass Reinforced Polymer (FRP) slab drains. All drains shall be of same type.

Slab drain bracket assembly shall be ASTM A709 Grade 36 steel.

The bracket assembly shall be galvanized in accordance with ASTM A123.

All bolts, hardened washers, lock washers and nuts shall be galvanized in accordance with ASTM A153.

Shop drawings will not be required for the slab drains and the bracket assembly.

Cost of cored slab drains, complete in place, will be considered completely covered by the contract unit price for Cored Slab Drain.

Holes for slab drains shall be cored. Percussion drilling will not be permitted.

Slab drain locations may be shifted the minimum extent necessary to avoid slab reinforcement and to allow for field drilling bolt hole in web of existing stringer or girder to avoid diaphragm connections and splices for bracket assembly attachment.

For details of plugging existing curb outlets, see Sheet No. 1.

Notes for Steel Drain:

Slab drains may be fabricated from 1/4" structural steel pipe ASTM A500 or A501.

The drains shall be galvanized in accordance with ASTM A123.

Drains shall be inserted through slab such that damage to galvanized coating is minimized.

Notes for Optional FRP Drain:

Drains shall be machine filament-wound thermosetting resin pipe meeting the requirements of ASTM D2996 with the following exceptions:

Minimum reinforced wall thickness shall be 1/4 inch.

The resin used shall be ultraviolet (UV) resistant and/or have UV inhibitors mixed throughout. Drains may have an exterior coating for additional UV resistance. Care shall be taken to avoid damage to exterior coating during installation.

The color of the slab drain shall be Gray (Federal Standard #26373). The color shall be uniform throughout the resin and any coating used.

The combination of materials used in the manufacture of the drains shall be tested for UV resistance in accordance with ASTM D4329 Cycle A. The representative material shall withstand at least 500 hours of testing with only minor discoloration and without any physical deterioration. The contractor shall furnish the results of the required ultraviolet testing prior to acceptance of the slab drains.

At the contractor's option, drains may be field cut. The method of cutting FRP slab drain shall be as recommended by the manufacturer to ensure a smooth, chip free cut.

No additional payment will be made for this substitution.

STATE OF MISSOURI
DAVID JAMES HAGEMEYER
NUMBER PE-2007002788
PROFESSIONAL ENGINEER
THIS SHEET HAS BEEN SIGNED, SEALED AND DATED ELECTRONICALLY.

DATE PREPARED	
10/3/2016	
ROUTE	STATE
I-55	MO
DISTRICT	SHEET NO.
BR	2
COUNTY	
JEFFERSON	
JOB NO.	
J6I3131	
CONTRACT ID.	
PROJECT NO.	
BRIDGE NO.	
A22225	

DATE	DESCRIPTION

IF A SEAL IS PRESENT ON THIS SHEET IT HAS BEEN ELECTRONICALLY SEALED AND DATED.

MISSOURI HIGHWAYS AND TRANSPORTATION COMMISSION
105 WEST CAPITOL
JEFFERSON CITY, MO 65102
1-888-ASK-MODOT (1-888-275-6636)

Detailed Aug. 2016
Checked Sep. 2016

Note: This drawing is not to scale. Follow dimensions.

SEC/SUR 1915 TWP 40N RGE 6E

U.I.P. AND REHAB EXISTING (69'-90'-69') CONTINUOUS COMPOSITE PLATE GIRDER SPANS

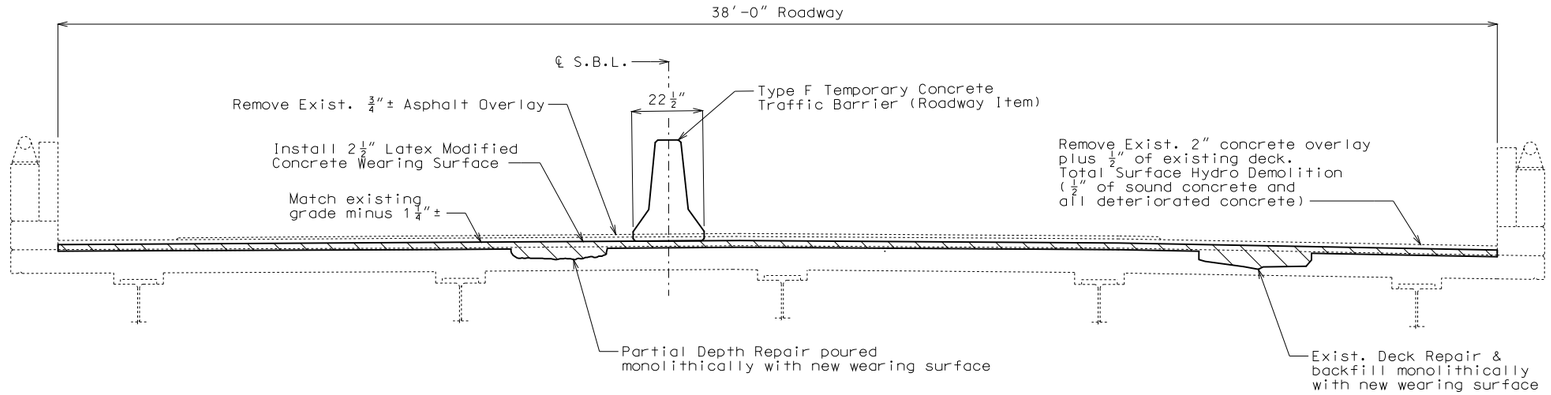

TYPICAL SECTION THRU EXISTING SLAB

General Notes:

Design Specifications:
2002 AASHTO LFD (17th Ed.) Standard Specifications
Load Factor Design
Bridge Deck Rating = 6

Design Loading:
HS20-44 and Modified 24,000 lb Tandem Axle (1965 & New Construction)

Design Unit Stresses:

Class B-1 Concrete (Curb and Parapet)	f'c = 4,000 psi
Class B-2 Concrete (Slab)	f'c = 4,000 psi
Reinforcing Steel (Grade 60)	fy = 60,000 psi

Miscellaneous:
In order to maintain grade and a minimum thickness of overlay as shown on plans it may be necessary to use additional quantities of overlay at various locations throughout the structure. The cost of furnishing and installing the overlay will be considered completely covered in the contract unit price, including all additional labor, materials or equipment for variations in thickness of overlay.

Roadway surfacing adjacent to bridge overlay ends shall match bridge overlay (Roadway Item).

Outline of old work is indicated by light dashed lines. Heavy lines indicate new work.

Contractor shall verify all dimensions in field before ordering new material.

Contractor shall remove all asphalt overlay to existing concrete substrate.

Traffic Handling:
Traffic to be maintained on structure during construction. See Roadway Plans for traffic control.

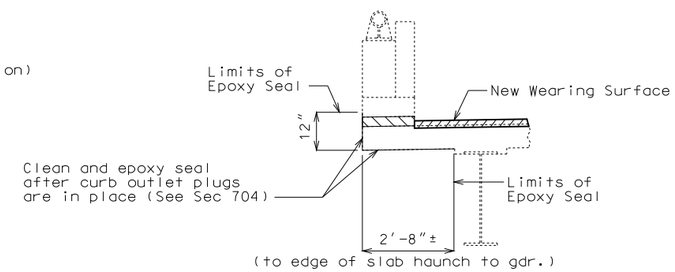

SECTION THRU EDGE OF SLAB
SHOWING CLEAN AND EPOXY SEAL

Note:
All reinforcing steel in slab overhang that is loose and exposed shall be removed as directed by the engineer. Removal of reinforcing steel and loose concrete will be considered completely covered by the contract unit price for Clean and Epoxy Seal.

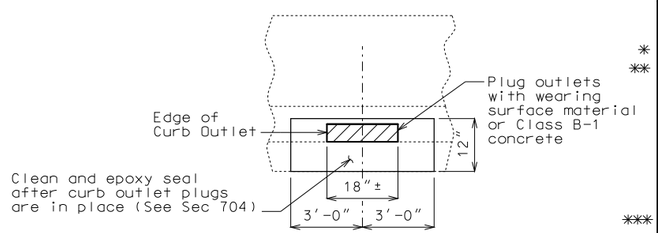

PART ELEVATION SHOWING EXISTING
CURB OUTLETS TO BE PLUGGED &
SHOWING LIMITS OF EPOXY SEAL

Notes:

Cost of labor and materials required to plug existing curb outlets will be considered completely covered by the contract unit price for Plugging Curb Outlet.

Estimated material required to fill all curb outlets is 2.1 cubic yards.

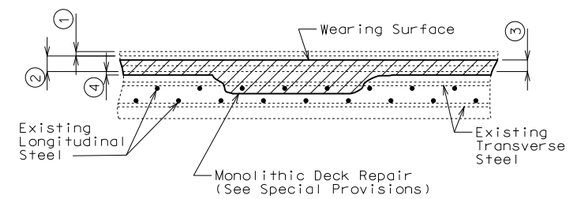

MONOLITHIC DECK REPAIR

1. Remove existing 3/4" asphalt overlay.
2. Remove existing 2" concrete overlay plus 1/2" of original deck.
3. 2 1/2" (Min.) Latex Modified Concrete Wearing Surface
4. Total surface hydro demolition of existing deck 1/2" min. of sound concrete and all deteriorated concrete.

Estimated Quantities

	Item		Total
	Removal of Asphalt Wearing Surface	sq. foot	6020
	Removal of Concrete Wearing Surface	sq. foot	8799
*	Partial Removal Of Existing Bridge Deck	sq. foot	122
**	Removal of Existing Expansion Joint & Adjacent Concrete	lin. foot	38
	Remove and Replace Curb & Blockout	lin. foot	8
	Removal of Existing Deck Repairs	sq. foot	150
	Latex Modified Concrete Wearing Surface	sq. yard	978
	Class B-2 Concrete	cu. yard	39.2
	Total Surface Hydro Demolition	sq. yard	978
	Clean and Epoxy Seal	sq. foot	1584
	Plugging Curb Outlets	each	72
***	Monolithic Deck Repair	cu. yard	8.1
	Cored Slab Drain	each	40
	Reinforcing Steel (Epoxy Coated)	pound	2430

* at End Bent No. 1
** at End Bent No. 4
*** Monolithic Deck Repairs will be made at a fixed unit price (See Job Special Provisions).

REPAIRS TO BRIDGE: ROUTE I-55 SB
OVER PLATTIN CREEK

ROUTE I-55 FROM ROUTE 61 SOUTH

ABOUT 1.0 MILE S.E. OF ROUTE 61

STA. 1027+14.20± (Match Existing)

STD. 617.20
STD. 706.35

Detailed Jul. 2016
Checked Sep. 2016

Note: This drawing is not to scale. Follow dimensions.

STATE OF MISSOURI
DAVID JAMES HAGEMEYER
NUMBER PE-2007002788
PROFESSIONAL ENGINEER
THIS SHEET HAS BEEN SIGNED, SEALED AND DATED ELECTRONICALLY.

DATE PREPARED 10/3/2016
ROUTE I-55 | STATE MO
DISTRICT BR | SHEET NO. 1
COUNTY JEFFERSON
JOB NO. J6I3131
CONTRACT ID.
PROJECT NO.
BRIDGE NO. A22226

DESCRIPTION | DATE

MISSOURI HIGHWAYS AND TRANSPORTATION COMMISSION
105 WEST CAPITOL
JEFFERSON CITY, MO 65102
1-888-ASK-MODOT (1-888-275-6636)

IF A SEAL IS PRESENT ON THIS SHEET IT HAS BEEN ELECTRONICALLY SEALED AND DATED.

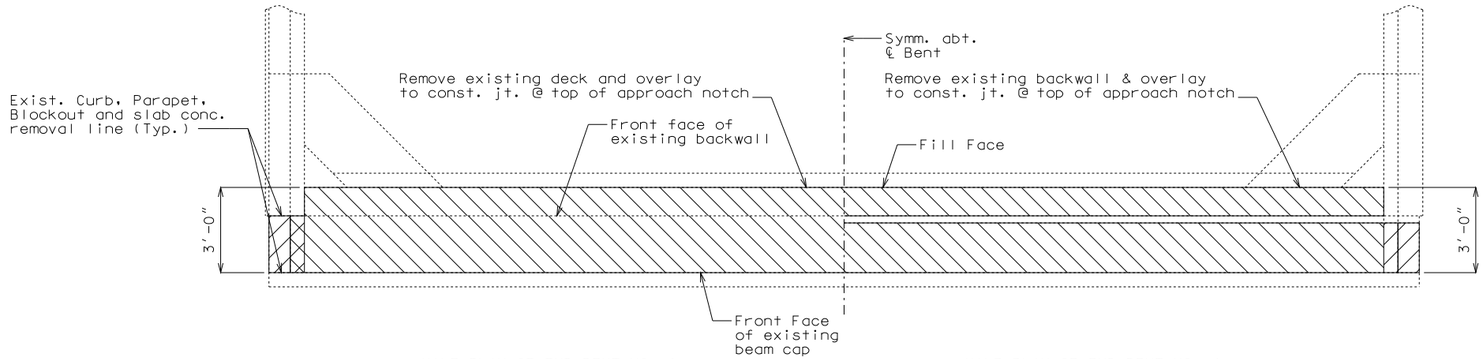

HALF PLAN OF END BENT NO. 1 HALF PLAN OF END BENT NO. 4

PLAN OF EXISTING END BENTS SHOWING CONCRETE REMOVAL

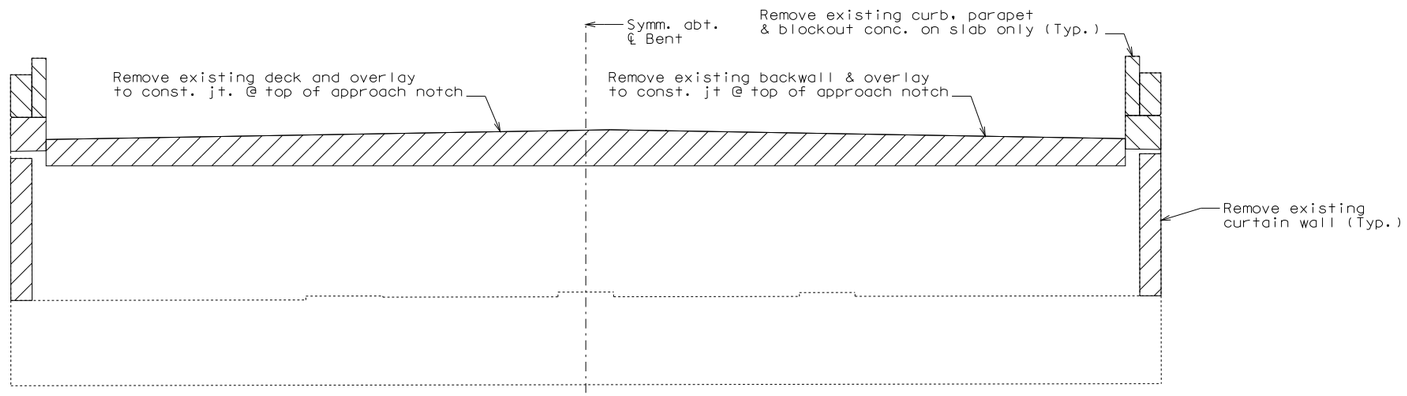

HALF ELEVATION OF END BENT NO. 1 HALF ELEVATION OF END BENT NO. 4

EXISTING ELEVATION OF END BENTS SHOWING CONCRETE REMOVAL

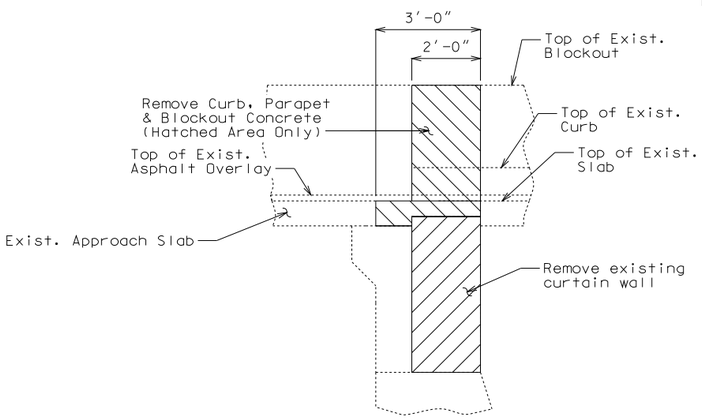

ELEVATION OF SLAB AT END BENT NO. 1
SHOWING LIMITS OF CONCRETE REMOVAL

Notes:

The cost of bridge deck concrete removal as shown at End Bent No. 1 will be considered completely covered by the contract unit price for Partial Removal of Existing Bridge Deck.

The cost of curb, parapet and blockout concrete removal as shown will be considered completely covered by the contract unit price for Remove and Replace Curb & Blockout.

The cost of bridge deck and backwall concrete removal at End Bent No. 4 will be considered completely covered by the contract unit price for Removal of Existing Expansion Joint and Adjacent Concrete.

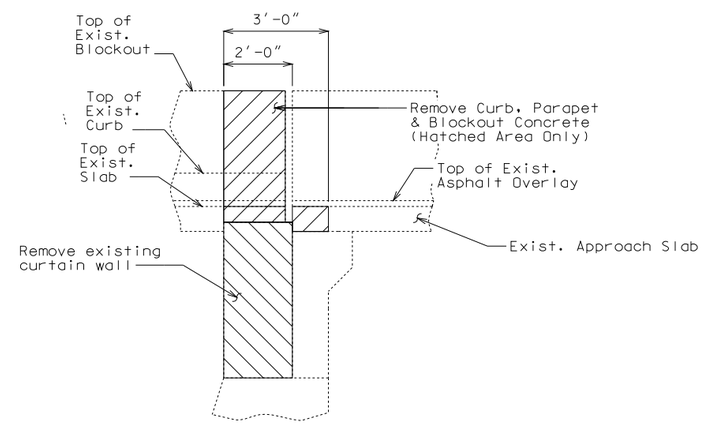

ELEVATION OF SLAB AT END BENT NO. 4
SHOWING LIMITS OF CONCRETE REMOVAL

DETAILS OF CONCRETE REMOVAL AT END BENTS

Detailed Aug. 2016
Checked Sep. 2016

Note: This drawing is not to scale. Follow dimensions.

STATE OF MISSOURI
DAVID JAMES HAGEMEYER
NUMBER PE-2007002788
PROFESSIONAL ENGINEER
THIS SHEET HAS BEEN SIGNED, SEALED AND DATED ELECTRONICALLY.

DATE PREPARED	10/3/2016
ROUTE	I-55
STATE	MO
DISTRICT	BR
SHEET NO.	2
COUNTY	JEFFERSON
JOB NO.	J6I3131
CONTRACT ID.	
PROJECT NO.	
BRIDGE NO.	A22226

DATE	DESCRIPTION

MISSOURI HIGHWAYS AND TRANSPORTATION COMMISSION
105 WEST CAPITOL
JEFFERSON CITY, MO 65102
1-888-ASK-MODOT (1-888-275-6636)

IF A SEAL IS PRESENT ON THIS SHEET IT HAS BEEN ELECTRONICALLY SEALED AND DATED.

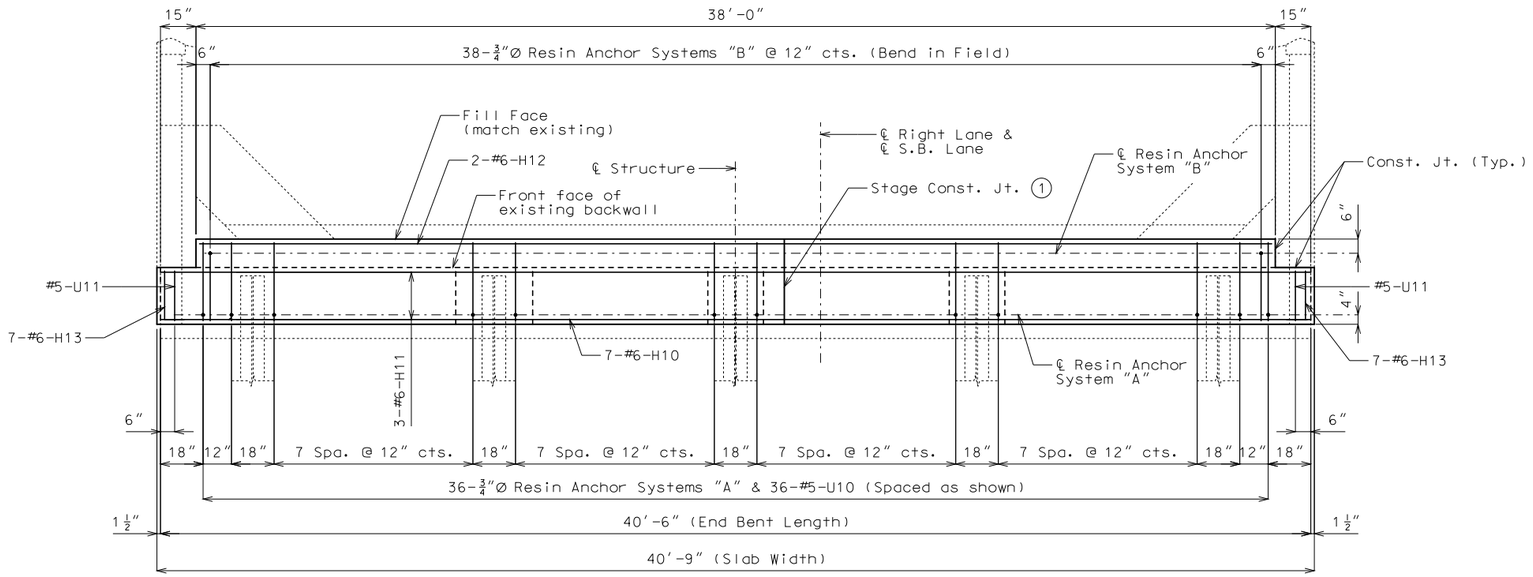

PART PLAN

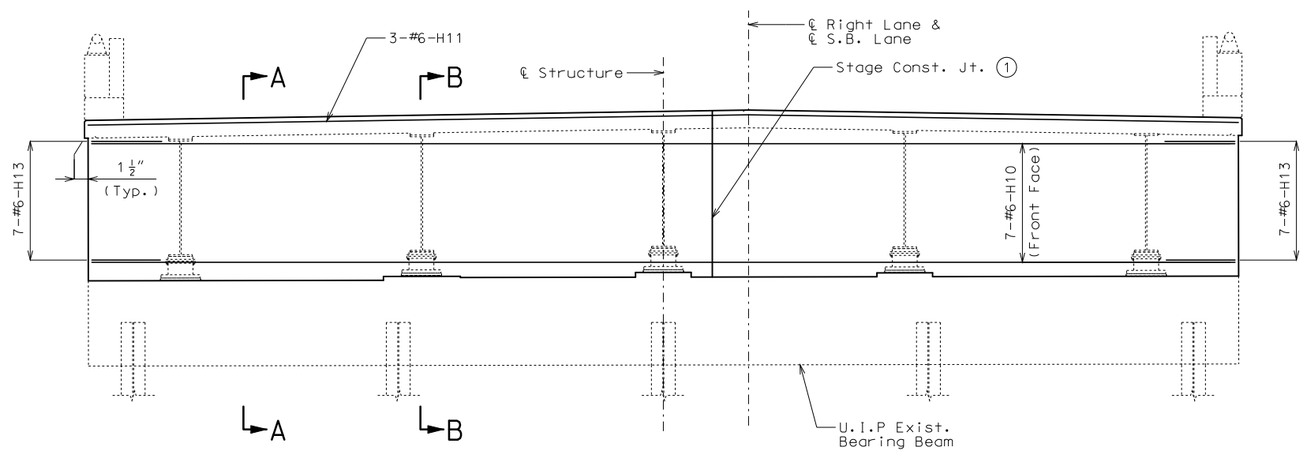

SECTION NEAR END BENT

(Resin anchor systems, #5-U10 and #5-U11 bars not shown for clarity)

Concrete Wearing Surface and end diaphragms not shown for clarity.

① Stage Const. Jt. location to be determined by the contractor with the approval of the Engineer.

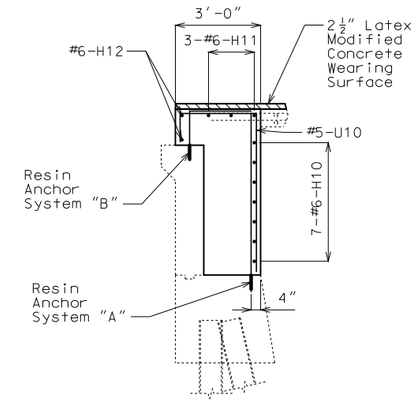

SECTION A-A

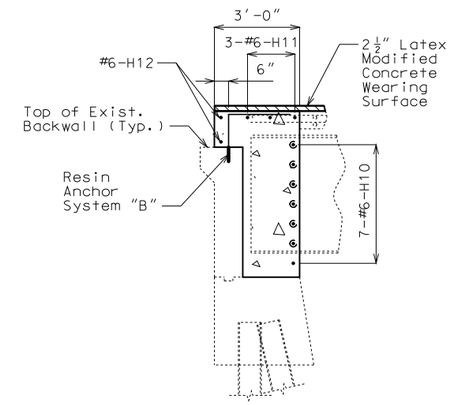

SECTION B-B

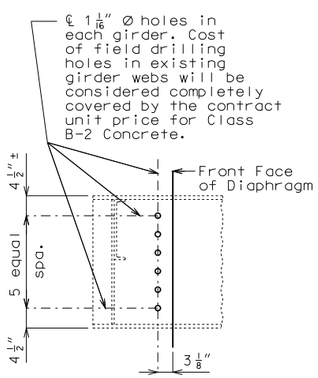

DETAIL OF WEB HOLES AT END BENTS

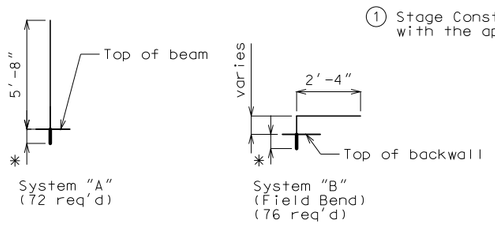

✱ Manufacturer's recommended embedment length (5" min.)

DETAILS OF RESIN ANCHOR SYSTEMS

Notes:

The contractor shall use one of the qualified resin anchor systems in accordance with Sec 1039.

Cost of furnishing and installing the resin anchor systems, complete-in-place will be considered completely covered by the contract unit price for Class B-2 Concrete.

The minimum embedment depth in concrete with f'c = 4,000 psi for the resin anchor system shall be that required to meet the minimum ultimate pullout strength in accordance with Sec 1039 but shall not be less than 5".

An epoxy coated #6 Grade 60 reinforcing bar shall be substituted for the ¾"Ø threaded rod.

The exposed and accessible surfaces of the existing structural steel and bearings that will be encased in concrete shall be cleaned with a minimum of SSPC-SP-2 surface preparation before concrete is poured. Payment for cleaning steel to be encased in concrete will be considered completely covered by the contract unit price for Class B-2 Concrete.

The #6-H10, #6-H11 & #6-H12 bars to be segmented to accommodate stage construction. The total bar length for #6-H10, #6-H11 & #6-H12 bars shown in Bill of Reinforcing Steel allows for one lap splice with a length of 3'-6". Actual bar segment lengths to be determined by contractor. The contractor may use a mechanical bar splice in lieu of a lap splice. When a mechanical bar splice is used, the actual bar segment length will be determined by the contractor to accommodate manufacturer's recommendations for installation and stage construction. The cost of furnishing and installing the bar splices will be considered completely covered by the contract unit price for Reinforcing Steel. No adjustment of the quantity of reinforcing steel will be allowed for the use of mechanical bar splices.

DETAILS OF END BENTS

(End Bent No. 1 shown, End Bent No. 4 similar)

Detailed July 2016
Checked Sep. 2016

Note: This drawing is not to scale. Follow dimensions.

STATE OF MISSOURI
DAVID JAMES HAGEMEYER
NUMBER PE-2007002788
PROFESSIONAL ENGINEER

THIS SHEET HAS BEEN SIGNED, SEALED AND DATED ELECTRONICALLY.

DATE PREPARED	
10/3/2016	
ROUTE	STATE
I-55	MO
DISTRICT	SHEET NO.
BR	3
COUNTY	
JEFFERSON	
JOB NO.	
J6I3131	
CONTRACT ID.	
PROJECT NO.	
BRIDGE NO.	
A22226	

DATE	DESCRIPTION

MISSOURI HIGHWAYS AND TRANSPORTATION COMMISSION
105 WEST CAPITOL
JEFFERSON CITY, MO 65102
1-888-ASK-MODOT (1-888-275-6636)

IF A SEAL IS PRESENT ON THIS SHEET IT HAS BEEN ELECTRONICALLY SEALED AND DATED.

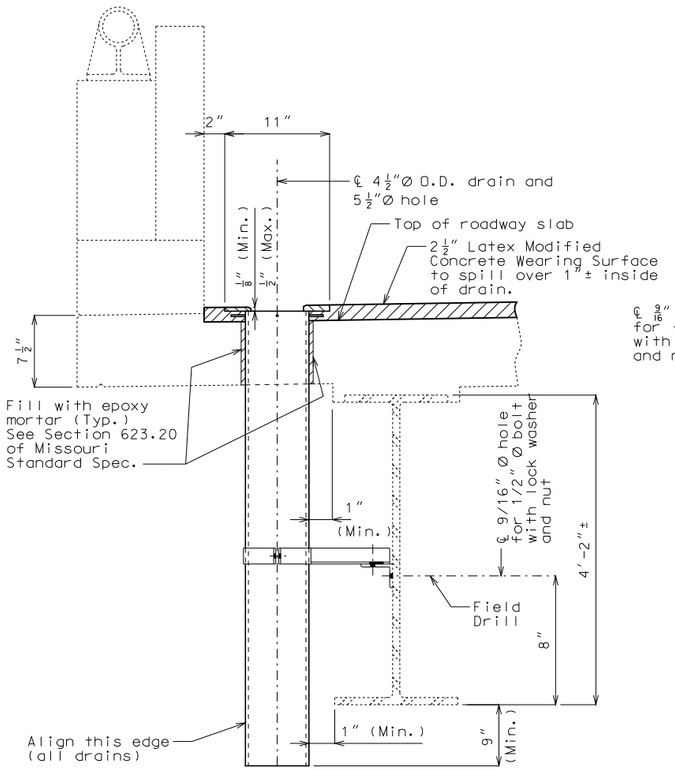

PART SECTION NEAR DRAIN

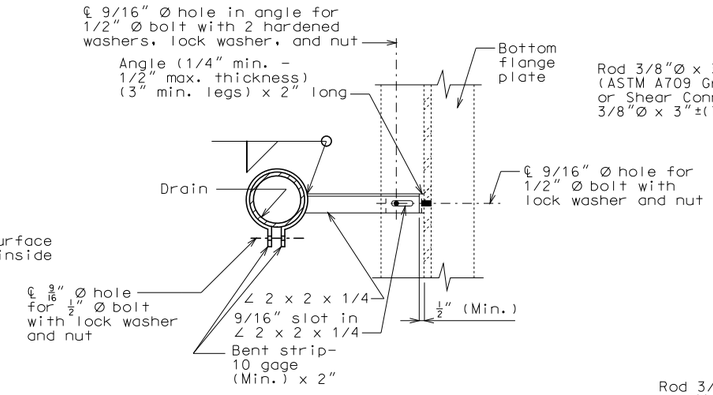

PART SECTION SHOWING BRACKET ASSEMBLY

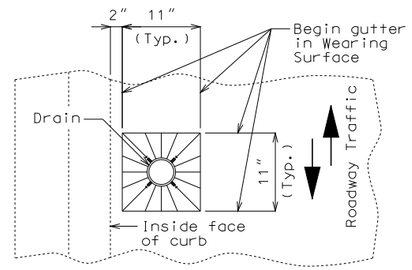

PART PLAN OF SLAB AT DRAIN

SLAB DRAIN DETAILS

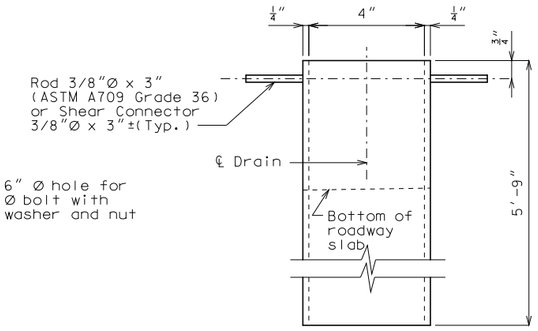

ELEVATION OF DRAIN

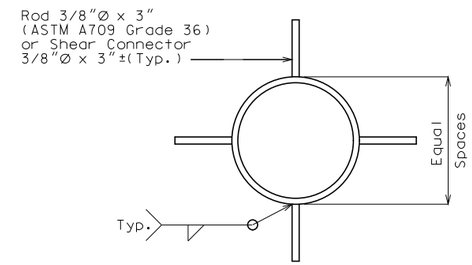

PLAN OF DRAIN

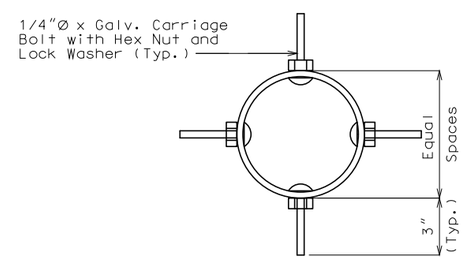

PLAN OF OPTIONAL FRP DRAIN

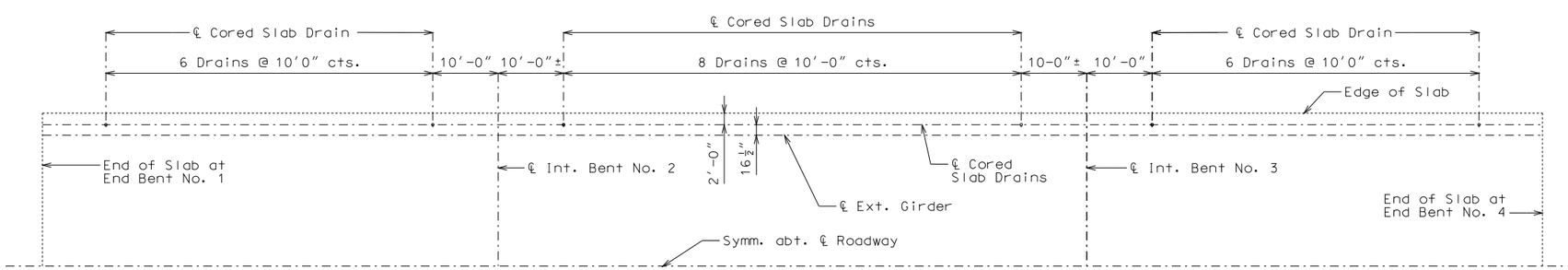

PLAN OF SLAB SHOWING LOCATION OF CORED SLAB DRAINS

General Notes:

Contractor shall have the option to construct either steel or Fiberglass Reinforced Polymer (FRP) slab drains. All drains shall be of same type.

Slab drain bracket assembly shall be ASTM A709 Grade 36 steel.

The bracket assembly shall be galvanized in accordance with ASTM A123.

All bolts, hardened washers, lock washers and nuts shall be galvanized in accordance with ASTM A153.

Shop drawings will not be required for the slab drains and the bracket assembly.

Cost of cored slab drains, complete in place, will be considered completely covered by the contract unit price for Cored Slab Drain.

Holes for slab drains shall be cored. Percussion drilling will not be permitted.

Slab drain locations may be shifted the minimum extent necessary to avoid slab reinforcement and to allow for field drilling bolt hole in web of existing stringer or girder to avoid diaphragm connections and splices for bracket assembly attachment.

For details of plugging existing curb outlets, see Sheet No. 1.

Notes for Steel Drain:

Slab drains may be fabricated from 1/4" structural steel pipe ASTM A500 or A501.

The drains shall be galvanized in accordance with ASTM A123.

Drains shall be inserted through slab such that damage to galvanized coating is minimized.

Notes for Optional FRP Drain:

Drains shall be machine filament-wound thermosetting resin pipe meeting the requirements of ASTM D2996 with the following exceptions:

Minimum reinforced wall thickness shall be 1/4 inch.

The resin used shall be ultraviolet (UV) resistant and/or have UV inhibitors mixed throughout. Drains may have an exterior coating for additional UV resistance. Care shall be taken to avoid damage to exterior coating during installation.

The color of the slab drain shall be Gray (Federal Standard #26373). The color shall be uniform throughout the resin and any coating used.

The combination of materials used in the manufacture of the drains shall be tested for UV resistance in accordance with ASTM D4329 Cycle A. The representative material shall withstand at least 500 hours of testing with only minor discoloration and without any physical deterioration. The contractor shall furnish the results of the required ultraviolet testing prior to acceptance of the slab drains.

At the contractor's option, drains may be field cut. The method of cutting FRP slab drain shall be as recommended by the manufacturer to ensure a smooth, chip free cut.

No additional payment will be made for this substitution.

STATE OF MISSOURI
DAVID JAMES HAGEMEYER
NUMBER PE-2007002788
PROFESSIONAL ENGINEER
THIS SHEET HAS BEEN SIGNED, SEALED AND DATED ELECTRONICALLY.

DATE PREPARED	
10/3/2016	
ROUTE	STATE
I-55	MO
DISTRICT	SHEET NO.
BR	2
COUNTY	
JEFFERSON	
JOB NO.	
J6I3131	
CONTRACT ID.	
PROJECT NO.	
BRIDGE NO.	
A22226	

DATE	DESCRIPTION

IF A SEAL IS PRESENT ON THIS SHEET IT HAS BEEN ELECTRONICALLY SEALED AND DATED.

MISSOURI HIGHWAYS AND TRANSPORTATION COMMISSION
105 WEST CAPITOL
JEFFERSON CITY, MO 65102
1-888-ASK-MODOT (1-888-275-6636)

Detailed Aug. 2016
Checked Sep. 2016

Note: This drawing is not to scale. Follow dimensions.

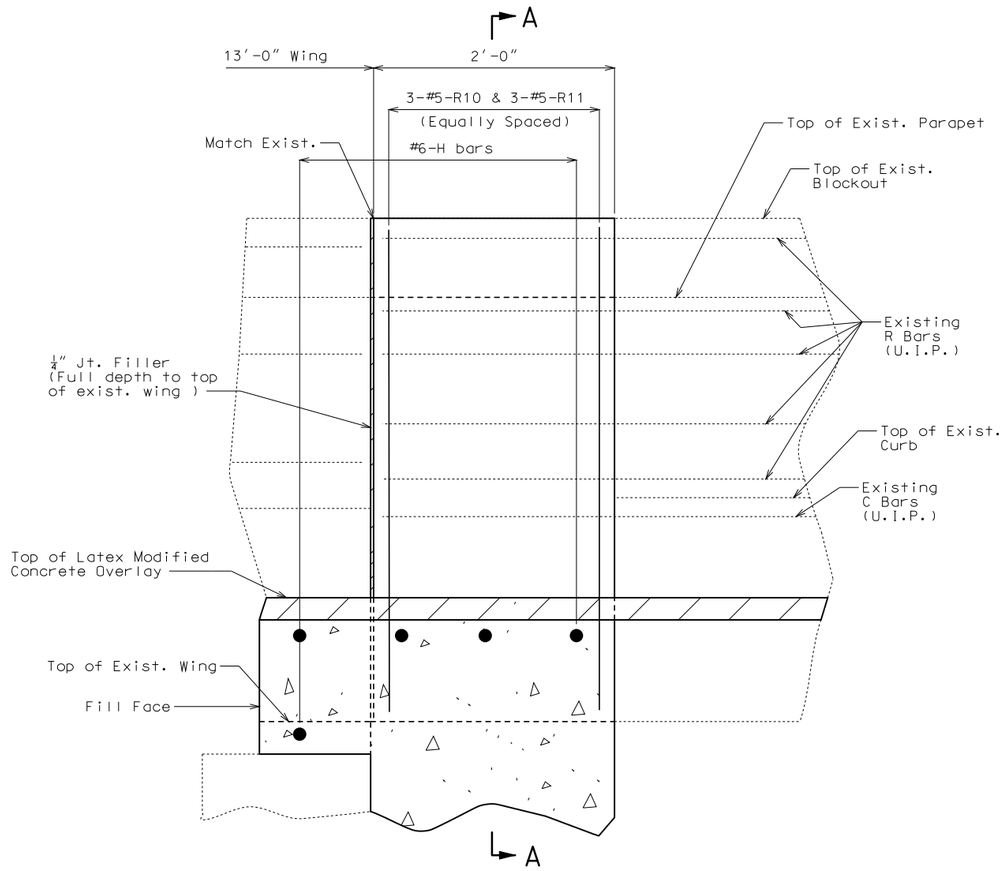

ELEVATION OF CURB & DECK
SHOWING NEW REINFORCEMENT

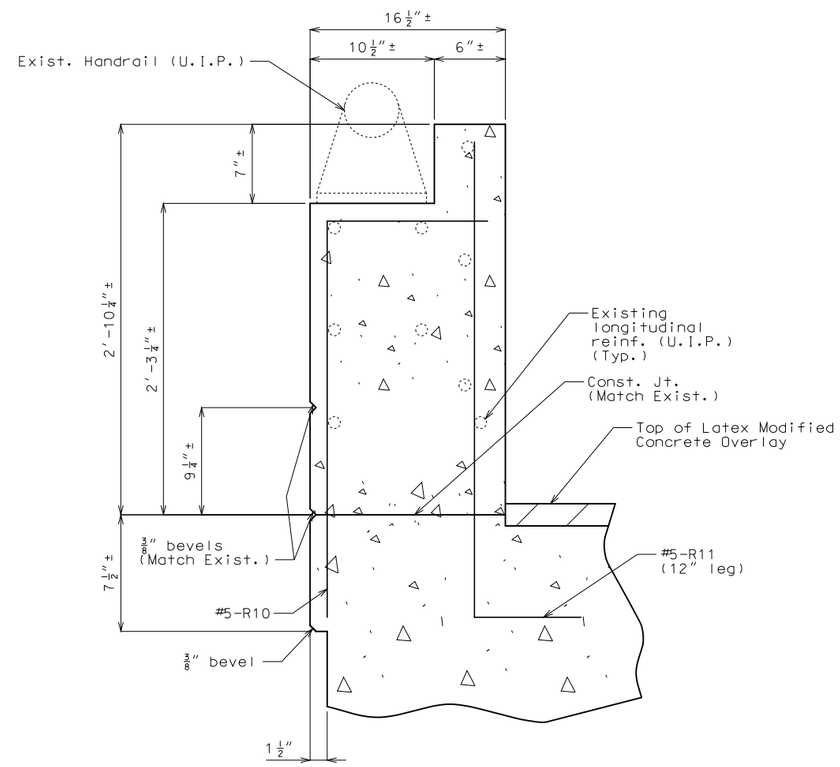

SECTION A-A

Note:

If existing rail post attachment is within length of curb and parapet being removed and replaced, then rail post shall be reattached to new parapet. Contractor may clean and reuse existing anchor bolts as approved by the engineer or replace the anchor bolts with like kind. Cost of rail post attachment will be considered completely covered by the contract unit price for Remove and Replace Curb & Blockout.

Payment for all concrete and reinforcemnt for curb and parapet, complete-in-place, will be considered completely covered by the contract unit price for Remove and Replace Curb & Blockout.

All exposed edges of the new curb and parapet shall match existing curb and parapet.

All concrete for curb and parapet shall be Class B-1.

DETAILS OF CURB REPLACEMENT AT END BENTS NO. 1 & 4

Detailed Aug. 2016
Checked Sep. 2016

Note: This drawing is not to scale. Follow dimensions.

STATE OF MISSOURI
DAVID JAMES HAGEMEYER
NUMBER PE-2007002788
PROFESSIONAL ENGINEER

THIS SHEET HAS BEEN SIGNED, SEALED AND DATED ELECTRONICALLY.

DATE PREPARED	10/3/2016
ROUTE	I-55
STATE	MO
DISTRICT	BR
SHEET NO.	5
COUNTY	JEFFERSON
JOB NO.	J6I3131
CONTRACT ID.	
PROJECT NO.	
BRIDGE NO.	A22226

DESCRIPTION

DATE

MISSOURI HIGHWAYS AND TRANSPORTATION COMMISSION

105 WEST CAPITOL
JEFFERSON CITY, MO 65102
1-888-ASK-MODOT (1-888-275-6636)

IF A SEAL IS PRESENT ON THIS SHEET IT HAS BEEN ELECTRONICALLY SEALED AND DATED.

REV.

BILL OF REINFORCING STEEL

NO. REQ'D.	MARK NO. SIZE	MARK NO. MARK	LOCATION	EPOXY (E)	SHAPE NO.	STIRRUP (S)	SUBSTR. (X)	VARIES (V)	NO. EACH	B FT. IN.	C FT. IN.	D FT. IN.	E FT. IN.	F FT. IN.	H FT. IN.	K FT. IN.	NOMINAL LENGTH FT. IN.	ACTUAL LENGTH FT. IN.	WEIGHT LBS.
			END BENT NO.																
			1 & 4																
14	6	H10	DIAPHRAGM	E	20					43 9.000							43 9	43 9	920
6	6	H11	DIAPHRAGM	E	20					44 0.000							44 0	44 0	397
4	6	H12	DIAPHRAGM	E	20					41 3.000							41 3	41 3	248
28	6	H13	DIAPHRAGM	E	19					20.500	2 5.000						4 2	4 0	168
72	5	U10	DIAPHRAGM	E	11	S					9.000	2 8.250	5 6.750				9 0	8 10	663
4	5	U11	DIAPHRAGM	E	19	S				5 6.750	20.250						7 3	7 2	30
			CURB																
12	5	R10	CURB	E	19	S				2 7.000	13.500						3 9	3 7	45
12	5	R11	CURB	E	19	S				3 2.000	12.000						4 2	4 1	51
			TOTALS																
	5			E															789
	6			E															1733
			TOTAL																0
			TOTAL	E															2522
			Slab on Girder																
	5			E															789
	6			E															1733
			TOTAL																2522

BILL OF REINFORCING STEEL

NO. REQ'D.	MARK NO. SIZE	MARK NO. MARK	LOCATION	EPOXY (E)	SHAPE NO.	STIRRUP (S)	SUBSTR. (X)	VARIES (V)	NO. EACH	B FT. IN.	C FT. IN.	D FT. IN.	E FT. IN.	F FT. IN.	H FT. IN.	K FT. IN.	NOMINAL LENGTH FT. IN.	ACTUAL LENGTH FT. IN.	WEIGHT LBS.

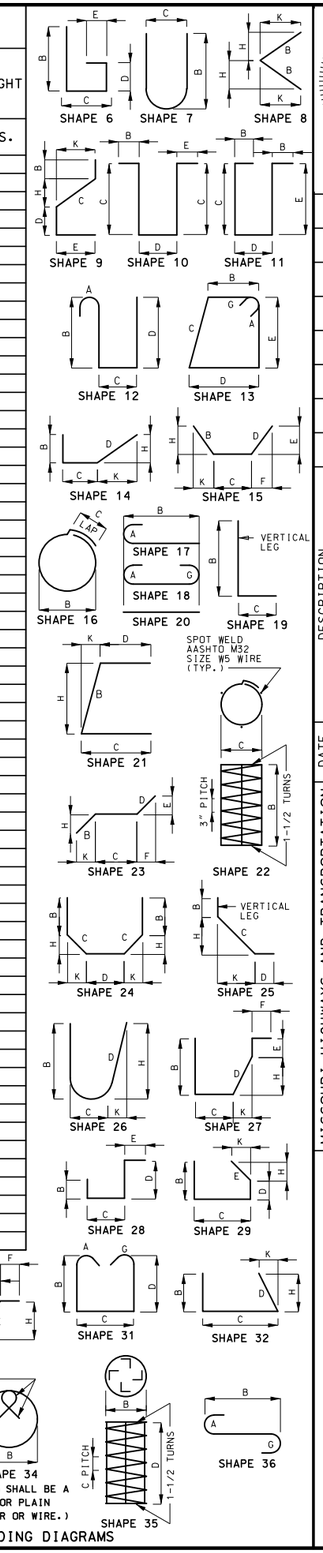

STATE OF MISSOURI
DAVID JAMES HAGEMEYER
NUMBER PE-2007002788
PROFESSIONAL ENGINEER

THIS SHEET HAS BEEN SIGNED, SEALED AND DATED ELECTRONICALLY.

DATE PREPARED 10/3/2016

ROUTE	STATE
I-55	MO
DISTRICT	SHEET NO.
BR	6

COUNTY: JEFFERSON

JOB NO. J6I3131

CONTRACT ID.

PROJECT NO.

BRIDGE NO. A22226

DESCRIPTION	DATE

IF A SEAL IS PRESENT ON THIS SHEET IT HAS BEEN ELECTRONICALLY SEALED AND DATED.

MISSOURI HIGHWAYS AND TRANSPORTATION COMMISSION

105 WEST CAPITOL
JEFFERSON CITY, MO 65102
1-888-ASK-MODOT (1-888-275-6636)

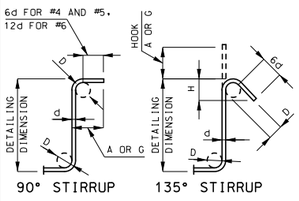

STIRRUP HOOK DIMENSIONS

GRADES 40 - 50 - 60 KSI

BAR SIZE	D (IN.)	90° HOOK: HOOK A OR G	135° HOOK: HOOK A OR G	135° HOOK: APPROX. H
#4	2"	4 1/2"	4 1/2"	3"
#5	2 1/2"	6"	5 1/2"	3 3/4"
#6	4 1/2"	12"	8"	4 1/2"

NOTE: UNLESS OTHERWISE NOTED, DIAMETER "D" IS THE SAME FOR ALL BENDS AND HOOKS ON A BAR.

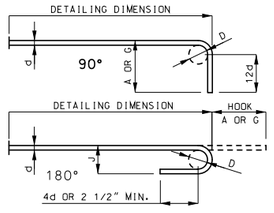

END HOOK DIMENSIONS

BAR SIZE	D (IN.)	ALL GRADES: 180° HOOKS A OR G	180° HOOKS J	90° HOOKS A OR G
#3	2 1/4"	5"	3"	6"
#4	3"	6"	4"	8"
#5	3 3/4"	7"	5"	10"
#6	4 1/2"	8"	6"	12"
#7	5 1/4"	10"	7"	14"
#8	6"	11"	8"	16"
#9	9 1/2"	15"	11 3/4"	19"
#10	10 3/4"	17"	13 1/4"	22"
#11	12"	19"	14 3/4"	2'-0"
#14	18 1/4"	2'-3"	21 3/4"	2'-7"

NOTE:
ALL STANDARD HOOKS AND BENDS OTHER THAN 180 DEGREE ARE TO BE BENT WITH SAME PROCEDURE AS FOR 90 DEGREE STANDARD HOOKS.
HOOKS AND BENDS SHALL BE IN ACCORDANCE WITH THE PROCEDURES AS SHOWN ON THIS SHEET.
E = EPOXY COATED REINFORCEMENT.
S = STIRRUP.
X = BAR IS INCLUDED IN SUBSTRUCTURE QUANTITIES.
V = BAR DIMENSIONS VARY IN EQUAL INCREMENTS BETWEEN DIMENSIONS SHOWN ON THIS LINE AND THE FOLLOWING LINE.
NO. EA. = NUMBER OF BARS OF EACH LENGTH.
NOMINAL LENGTHS ARE BASED ON OUT TO OUT DIMENSIONS SHOWN IN BENDING DIAGRAMS AND ARE LISTED FOR FABRICATORS USE. (NEAREST INCH)
ACTUAL LENGTHS ARE MEASURED ALONG CENTERLINE BAR TO THE NEAREST INCH.
PAYWEIGHTS ARE BASED ON ACTUAL LENGTHS.
FOUR ANGLE OR CHANNEL SPACERS ARE REQUIRED FOR EACH COLUMN SPIRAL. SPACERS ARE TO BE PLACED ON INSIDE OF SPIRALS. LENGTH AND WEIGHT OF COLUMN SPIRALS DO NOT INCLUDE SPLICES OR SPACERS.
REINFORCING STEEL (GRADE 60) FY = 60,000 PSI.

Detailed Sep. 2016
Checked Sep. 2016

Note: This drawing is not to scale. Follow dimensions.

Multiple files are bound together in this PDF Package.

Adobe recommends using Adobe Reader or Adobe Acrobat version 8 or later to work with documents contained within a PDF Package. By updating to the latest version, you'll enjoy the following benefits:

- Efficient, integrated PDF viewing
- Easy printing
- Quick searches

Don't have the latest version of Adobe Reader?

Click here to download the latest version of Adobe Reader

If you already have Adobe Reader 8,
click a file in this PDF Package to view it.