MISSOURI HIGHWAYS AND TRANSPORTATION COMMISSION
CONSTRUCTION PLANS FOR
BRIDGE REHABILITATION
CAMDEN COUNTY
ROUTE A

BRIDGE A2095 - SEC. 23 T38N/R15W
BRIDGE A2097 - SEC. 36 T37N/R14W

DESIGN DESIGNATION

BRIDGE A2095
A.A.D.T. - 2015 = 1322
T = 11.10%
V = 55 M.P.H.

BRIDGE A2097
A.A.D.T. - 2015 = 914
T = 10.90%
V = 55 M.P.H.

FUNCTIONAL CLASSIFICATION- MAJOR COLLECTOR

NO NEW R/W REQUIRED

CONVENTIONAL SYMBOLS
(USED IN PLANS)

	EXISTING	NEW
BUILDINGS AND STRUCTURES		
GUARD RAIL		
CONCRETE RIGHT-OF-WAY MARKER		
STEEL RIGHT-OF-WAY MARKER		
LOCATION SURVEY MARKER		
UTILITIES		
FIBER OPTICS	—FO—	—FO—
OVERHEAD TELEPHONE		
UNDERGROUND TELEPHONE	—T—	—T—
OVERHEAD POWER		
UNDERGROUND POWER	—P—	—P—
GAS	—G—	—G—
WATER	—W—	—W—
MANHOLE	SAN	
FIRE HYDRANT	HYD	
WATER VALVE	WV	
WATER METER	WM	
DROP INLET	DI	
DITCH BLOCK		
GROUND MOUNTED SIGN	SIGN	
LIGHT POLE		
H-FRAME POWER POLE		
TELEPHONE PEDESTAL	PED	
FENCE		
CHAIN LINK	—V—	
WOVEN WIRE	—X—	
GATE POST		
BENCHMARK	BM	

NOTE: DASHED OR OPEN SYMBOLS INDICATE EXISTING FEATURES

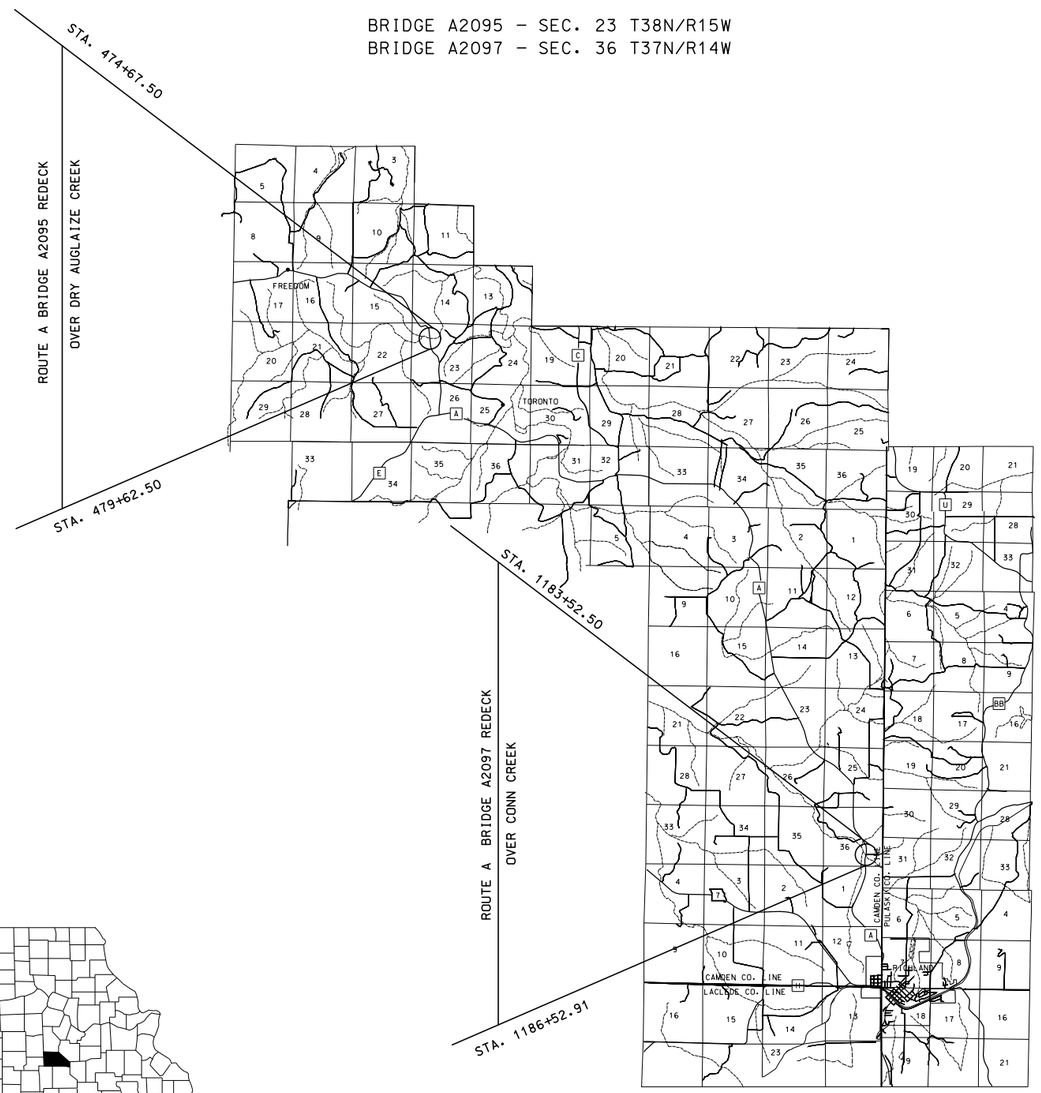

KEY MAP
SHOWING LOCATION OF CAMDEN COUNTY

NOT TO SCALE

INDEX OF SHEETS

DESCRIPTION	SHEET NUMBER
TITLE SHEET	1
TYPICAL SECTIONS (TS) (2 SHEETS)	2
QUANTITIES (QU) (3 SHEETS)	3
PLAN-PROFILE (PP)	4-5
SPECIAL SHEET (SS)	6
TRAFFIC CONTROL SHEETS (TC)	7-9
EROSION CONTROL SHEETS (EC)	10-11
BRIDGE SHEETS	1-18

LENGTH OF PROJECT

ROUTE A (JOB NO. J5S3147)

BRIDGE A2095
BEGINNING OF PROJECT STA. 474+67.50
END OF PROJECT STA. 479+62.50
APPARENT LENGTH 495.00 FEET

BRIDGE A2097
BEGINNING OF PROJECT STA. 1183+52.50
END OF PROJECT STA. 1186+52.91
APPARENT LENGTH 300.41 FEET

EQUATIONS AND EXCEPTIONS:
EQ - NONE

NET LENGTH OF PROJECT 795.41 FEET
STATE LENGTH 0.151 MILES

STATE OF MISSOURI
ROBERT B. GREEN
NUMBER PE-25339
PROFESSIONAL ENGINEER
THIS SHEET HAS BEEN SIGNED, SEALED AND DATED ELECTRONICALLY.

DATE PREPARED	
9/27/2016	
ROUTE: A	STATE: MO
DISTRICT: CD	SHEET NO.: 1
COUNTY: CAMDEN	
JOB NO.: J5S3147	
CONTRACT ID.	
PROJECT NO.	
BRIDGE NO.: A2095/A2097	

DATE	DESCRIPTION

IF A SEAL IS PRESENT ON THIS SHEET IT HAS BEEN ELECTRONICALLY SEALED AND DATED.

MISSOURI HIGHWAYS AND TRANSPORTATION COMMISSION
105 WEST CAPITOL
JEFFERSON CITY, MO 65102
1-888-ASK-MODOT (1-888-275-6636)

REV.

NOT TO SCALE

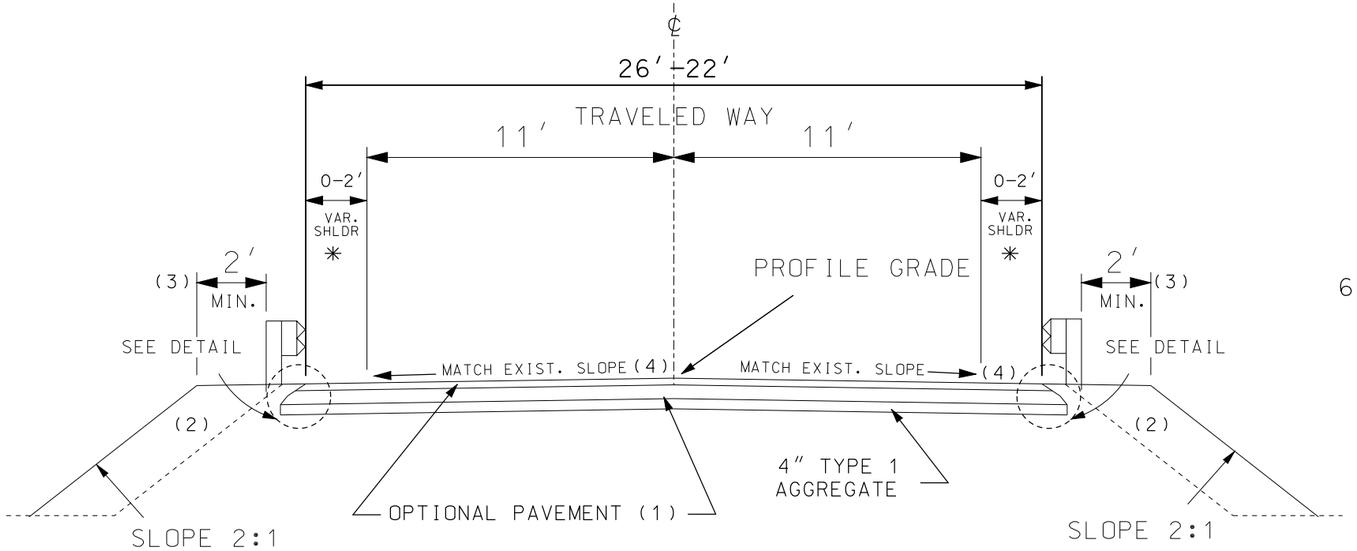

TYPICAL SECTION

ROUTE A BRIDGE A2095
OVER DRY AUGLAIZE CREEK

ROUTE A BRIDGE A2095 (5)
NORTH END : STA. 475+05.00 - 475+55.00
SOUTH END : STA. 478+75.00 - 479+25.00

✳ TAPER SHOULDER FROM 0′ TO 2′
- STA. 475+05.00 TO 475+55.00
- STA. 1183+15.41 TO 1184+39.66

TAPER SHOULDER FROM 2′ TO 0′
- STA. 478+74.00 TO 479+25.00
- STA. 1185+65.41 TO 1186+15.41

NOTES:

(1) OPTIONAL PAVEMENT $1\frac{3}{4}$″ BP-1 OVER $8\frac{1}{4}$″ PMBB (PG64-22) OR 8″ JPCP

(2) PORTIONS OF FILL SLOPE WILL REQUIRE WIDENING TO ACCOMODATE GUARDRAIL. FILL WILL BE PAID FOR AS CLASS III SHAPING SLOPES..

(3) 2′ FILL MINIMUM BEHIND GUARDRAIL FOR BRIDGE APPROACH TRANSITION (MINOR ROUTE) AND CRASHWORTHY END TERMINAL. SEE STANDARD PLANS FOR SPECIFIC REQUIREMENTS.

(4) MATCH EXISTING PAVEMENT SLOPE AND ELEVATION AT STA. 474+67.50 AND STA. 479+62.50; MATCH BRIDGE SLOPE AT STA. 475+55.00 AND STA. 478+75.00.

(5) STATIONING LISTED ON TYPICAL SECTIONS REFLECT PAVEMENT LIMITS. GUARDRAIL AND GRADING EXCEED THOSE LIMITS.

SAFETY EDGE DETAIL

(BIT. PVMT. OPTION SHOWN
CONCRETE OPTION SIMILAR)

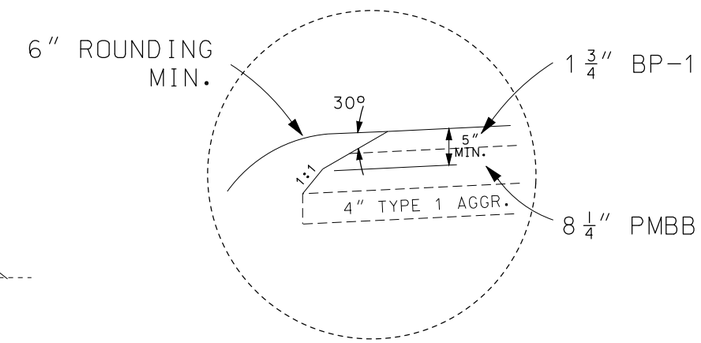

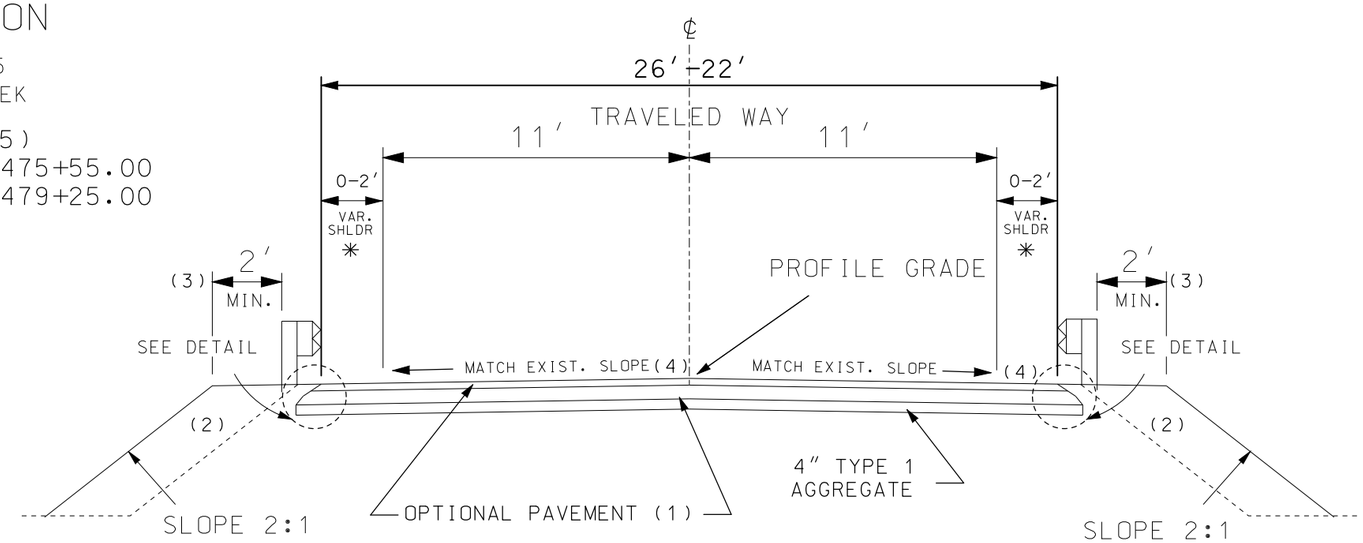

TYPICAL SECTION

ROUTE A BRIDGE A2097
OVER CONN CREEK

ROUTE A A2097 (5)
NORTH END : STA. 1183+90.00 - 1184+39.66
SOUTH END : STA. 1185+65.41 - 1186+15.41

TYPICAL SECTION SHEET
SHEET 1 OF 2

STATE OF MISSOURI
ROBERT B. GREEN
NUMBER PE-25339
PROFESSIONAL ENGINEER
THIS SHEET HAS BEEN SIGNED, SEALED AND DATED ELECTRONICALLY.

DATE PREPARED	
10/13/2016	
ROUTE: A	STATE: MO
DISTRICT: CD	SHEET NO.: 2
COUNTY: CAMDEN	
JOB NO.: J5S3147	
CONTRACT ID.	
PROJECT NO.	
BRIDGE NO.: A2095/A2097	

DATE	DESCRIPTION

IF A SEAL IS PRESENT ON THIS SHEET IT HAS BEEN ELECTRONICALLY SEALED AND DATED.

MISSOURI HIGHWAYS AND TRANSPORTATION COMMISSION
105 WEST CAPITOL
JEFFERSON CITY, MO 65102
1-888-ASK-MODOT (1-888-275-6636)

TYPICAL SECTION SHEET
ROUTE A
SHEET 1 OF 2

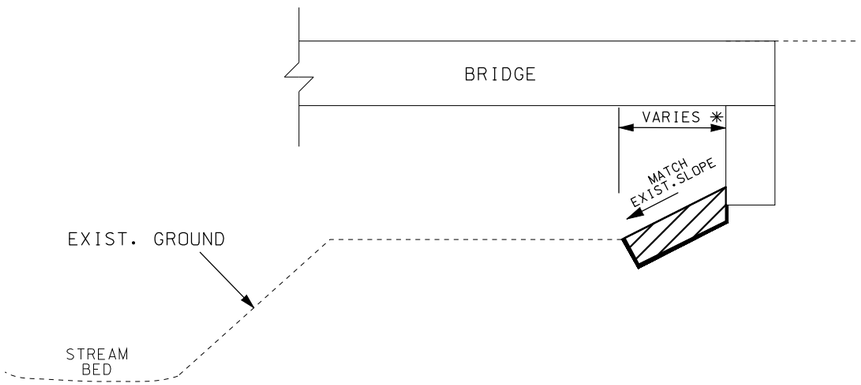

TYPICAL SECTION VIEW
ROCK BLANKET REPAIR

* AS APPROVED BY ENGINEER
SEE QTY. SHEETS FOR ESTIMATED AREA AND QUANTITIES.

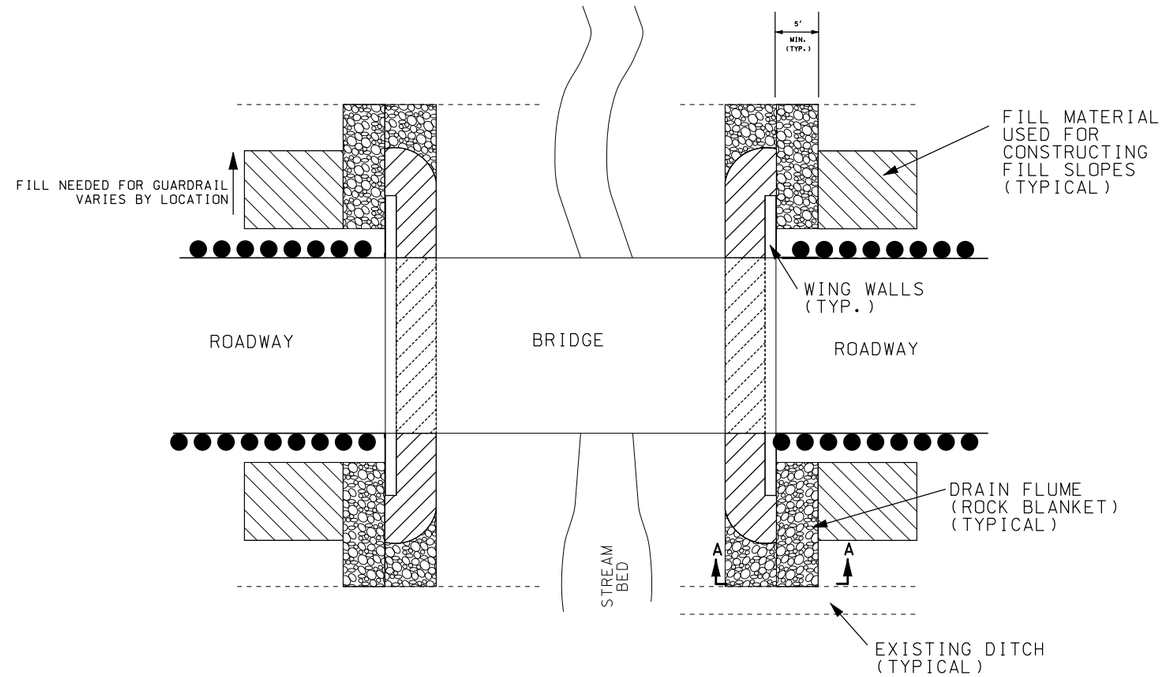

PLAN VIEW
ROCK BLANKET REPAIR

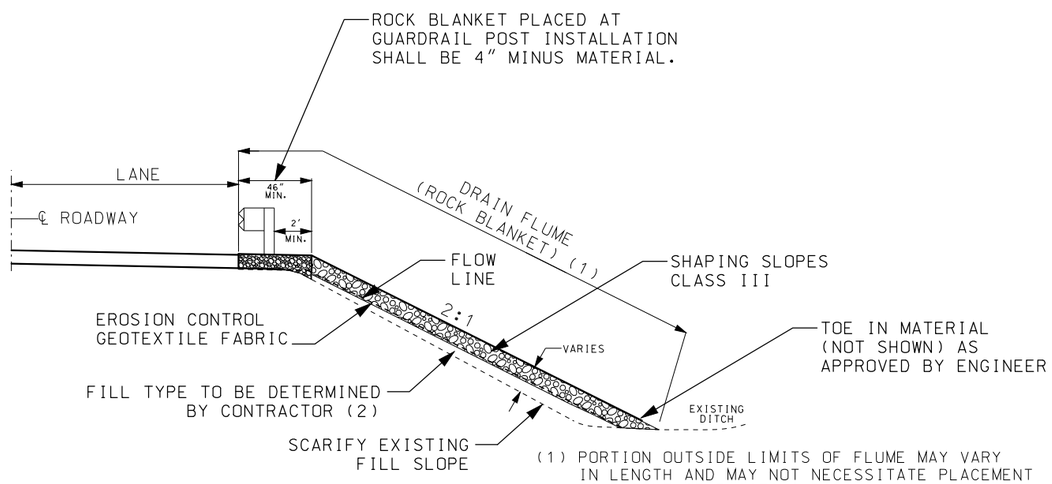

FILL PROFILE

(TYPICAL)

(1) PORTION OUTSIDE LIMITS OF FLUME MAY VARY IN LENGTH AND MAY NOT NECESSITATE PLACEMENT TO EXTENT OF EXISTING DITCH.

(2) MATERIAL USED FOR CONSTRUCTING FILL SLOPES SHALL BE DETERMINED BY CONTRACTOR AND APPROVED BY ENGINEER. FILL SLOPES CONSTRUCTION SHALL BE COMPLETELY COVERED AND INCLUSIVE TO SHAPING SLOPES CLASS III.

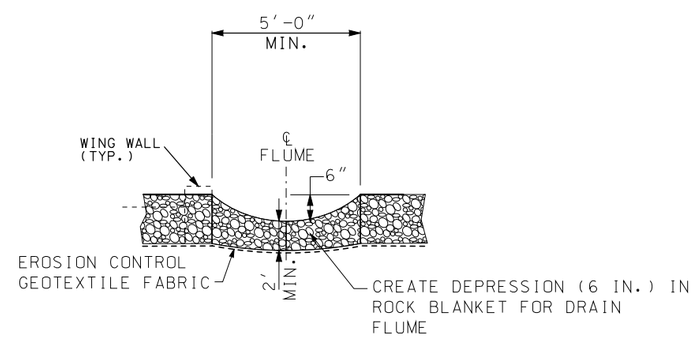

SECTION A-A

REPAIR ROCK BLANKET (AS APPROVED BY ENGINEER)
ROCK BLANKET

GENERAL NOTES:

CONSTRUCT DRAIN FLUMES AND/OR FILL SLOPE PROTECTION WHEN SHOWN ON ROADWAY PLANS AS APPROVED BY ENGINEER.

ALL FILL SLOPES 2:1 MAXIMUM.

PAYMENT FOR FURNISHING ALL MATERIALS, LABOR AND EXCAVATION NECESSARY TO CONSTRUCT THE DRAIN FLUMES, INCLUDING THE PERMANENT EROSION CONTROL GEOTEXTILE, COMPLETE-IN-PLACE, WILL BE CONSIDERED COMPLETELY COVERED BY THE CONTRACT UNIT PRICE FOR FURNISHING AND PLACING ROCK BLANKET.

NOT TO SCALE

TYPICAL SECTION SHEET
DRAIN FLUMES AND FILL SLOPES
SHEET 2 OF 2

STATE OF MISSOURI
ROBERT B. GREEN
NUMBER PE-25339
PROFESSIONAL ENGINEER

THIS SHEET HAS BEEN SIGNED, SEALED AND DATED ELECTRONICALLY.

DATE PREPARED	9/27/2016
ROUTE	A
STATE	MO
DISTRICT	CD
SHEET NO.	2
COUNTY	CAMDEN
JOB NO.	J5S3147
CONTRACT ID.	
PROJECT NO.	
BRIDGE NO.	A2095/A2097

DATE	DESCRIPTION

MISSOURI HIGHWAYS AND TRANSPORTATION COMMISSION
105 WEST CAPITOL
JEFFERSON CITY, MO 65102
1-888-ASK-MODOT (1-888-275-6636)

TYPICAL SECTION SHEET
DRAIN FLUMES & FILL SLOPES
SHEET 2 OF 2

IF A SEAL IS PRESENT ON THIS SHEET IT HAS BEEN ELECTRONICALLY SEALED AND DATED.

MISSOURI HIGHWAYS AND TRANSPORTATION COMMISSION

SUMMARY OF QUANTITIES

REMOVAL OF IMPROVEMENTS				
LOCATION - BRIDGE NO.	QUANTITY EACH	QUANTITY FT.	QUANTITY SY.	REMARKS
A2095		22		SAWCUT FULL DEPTH NORTH OF BRIDGE
A2095			133.3	REMOVAL OF EXISTING PAVEMET
A2095		22		SAWCUT FULL DEPTH SOUTH OF BRIDGE
			133.3	REMOVAL OF EXISTING PAVEMET
A2095	2			2 OBJECT MARKERS
A2095	2			DRY AUGLAIZE CREEK SIGN (SALVAGE FOR REPLACEMENT)
A2097		22		SAWCUT FULL DEPTH NORTH OF BRIDGE
			133.3	REMOVAL OF EXISTING PAVEMET
A2097		22		SAWCUT FULL DEPTH SOUTH OF BRIDGE
			133.3	REMOVAL OF EXISTING PAVEMET
A2097	4			4 OBJECT MARKERS
TOTAL	1 LUMP SUM			

SHAPING SLOPES, CLASS III				
FROM STATION	TO STATION	LOCATION	QUANTITY STA.	REMARKS
475+05.00	475+57.68	A2095 (LT)	0.88	
475+05.00	475+52.32	A2095 (RT)	0.88	
478+77.68	479+25.00	A2095 (LT)	0.88	
478+72.32	479+25.00	A2095 (RT)	0.88	
1183+90.00	1184+42.95	A2097 (LT)	0.88	
1183+90.00	1184+37.06	A2097 (RT)	0.88	
1185+68.36	1186+15.41	A2097 (LT)	0.88	
1185+62.46	1186+15.41	A2097 (RT)	0.88	
		TOTAL	7.04	
		TOTAL USE	7	

CONSTRUCTION OF FILL FOR 2' BEHIND GUARDRAIL

TYPE 1 AGGREGATE FOR BASE (4 IN. THICK)						
FROM STATION	TO STATION	LOCATION	LENGTH FT	WIDTH FT	AGG. BASE SY	REMARKS
475+05.00	475+55.00	ROUTE A	50	22-26	133.33	NORTH OF A2095
478+75.00	479+25.00	ROUTE A	50	22-26	133.33	SOUTH OF A2095
1183+90.00	1184+40.00	ROUTE A	50	22-26	133.33	NORTH OF A2097
1185+65.41	1186+15.41	ROUTE A	50	22-26	133.33	SOUTH OF A2097
				TOTAL	533.3	
				USE	533	
25:1 TAPER FOR AGGREFATE BASE						

OPTIONAL PAVEMENT - 10" ASPHALT OR 8" JPCP						
FROM STATION	TO STATION	LOCATION	LENGTH FT	WIDTH FT	OPTIONAL PAVEMENT SY	REMARKS
475+05.00	475+55.00	ROUTE A	50	22-26	133.33	NORTH OF A2095
478+75.00	479+25.00	ROUTE A	50	22-26	133.33	SOUTH OF A2095
1183+90.00	1184+40.00	ROUTE A	50	22-26	133.33	NORTH OF A2097
1185+65.41	1186+15.41	ROUTE A	50	22-26	133.33	SOUTH OF A2097
				TOTAL	533.32	
				USE	533.3	

PERMANENT PAVEMENT MARKING						
WATERBOURNE PAVEMENT MARKING PAINT, TYPE P BEADS						
FROM STATION	TO STATION	LOCATION	4" SOLID WHITE LF.	4" SOLID YELLOW LF.	4" INT. YELLOW LF.	REMARKS
475+05.00	479+25.00	ROUTE A - LT. & RT.	840.00			BRIDGE A2095
475+05.00	479+25.00	ROUTE A - CENTERLINE		210.00	52.5	BRIDGE A2095
1183+90.00	1186+15.41	ROUTE A - LT. & RT.	450.82			BRIDGE A2097
1183+90.00	1186+15.41	ROUTE A - CENTERLINE		450.82		BRIDGE A2097
		TOTAL	1290.82	660.82	52.50	
		USE	1291	713		

CONTRACTOR SHALL VERIFY STRIPING PRIOR TO CONSTRUCTION.

SEEDING					
FROM	TO	LOCATION	COOL SEASON (AC)	TEMP SEEDING (AC)	REMARKS
475+05.00	475+57.68	A2095 LT. & RT.	0.120	0.012	
478+72.36	479+52.32	A2095 LT. & RT.	0.120	0.012	
1183+90.00	1184+37.06	A2097 LT. & RT.	0.100	0.01	
1185+62.46	1186+15.41	A2097 LT. & RT.	0.100	0.01	
		TOTAL	0.44	0.044	
		USE	0.4	0.1	

TEMPORARY EROSION CONTROL						
FROM STATION	TO STATION	LOCATION	SILT FENCE L.F.	ROCK DITCH CHECK L.F.	TYPE C BERM L.F.	SEDIMENT REMOVAL CY.
475+05.00	479+25.00	A2095	400	120	110	16
1183+90.00	1186+15.41	A2097	400	120	110	16
		TOTAL USE	800	240	220	32
* SEE EROSION CONTROL SHEETS FOR DETAILS						

QUANTITY SHEET
SHEET 1 OF 3

STATE OF MISSOURI
ROBERT B. GREEN
NUMBER PE-25339
PROFESSIONAL ENGINEER

THIS SHEET HAS BEEN SIGNED, SEALED AND DATED ELECTRONICALLY.

DATE PREPARED 9/28/2016

ROUTE	STATE
A	MO
DISTRICT	SHEET NO.
CD	3

COUNTY: CAMDEN

JOB NO.: J5S3147

CONTRACT ID.:

PROJECT NO.:

BRIDGE NO.: A2095/A2097

DESCRIPTION	DATE

MISSOURI HIGHWAYS AND TRANSPORTATION COMMISSION

105 WEST CAPITOL
JEFFERSON CITY, MO 65102
1-888-ASK-MODOT (1-888-275-6636)

QUANTITY SHEET
SHEET 1 OF 3

IF A SEAL IS PRESENT ON THIS SHEET IT HAS BEEN ELECTRONICALLY SEALED AND DATED.

REV.

MISSOURI HIGHWAYS AND TRANSPORTATION COMMISSION

SUMMARY OF QUANTITIES

GUARDRAIL					
LOCATION	MGS BRIDGE APPROACH TRANSITION SECTION (MINOR ROUTE) EACH	MGS GUARDRAIL, 8 FT. POSTS, 6FT.- 3IN. SPACING L.F.	TYPE A CRASHWORTHY END TERMINAL (MASH) EACH	MGS END ARCHOR EACH	REMARKS
BRIDGE A2095	1	25	1		NW CORNER
BRIDGE A2095	1		1		SW CORNER
BRIDGE A2095	1		1		NE CORNER
BRIDGE A2095	1	25	1		SE CORNER
BRIDGE A2097	1	12.5	1		NW CORNER
BRIDGE A2097	1		1		SW CORNER
BRIDGE A2097	1	50		1	NE CORNER - WRAP AROUND ENT.
BRIDGE A2097	1	12.5	1		SE CORNER
TOTAL	8	125	7	1	
TOTAL USE	8	125	7	1	

MOBILIZATION
1 LUMP SUM

CONTRACTOR FURNISHED SURVEYING AND STAKING
1 LUMP SUM

TYPE II ROCK BLANKET						
LOCATION - BRIDGE NO.	LENGTH FT.	WIDTH FT.	DEPTH FT.	FURNISHING TYPE II ROCK BLANKET CU. YDS.	PLACING TYPE II ROCK BLANKET CU. YDS.	REMARKS
(LT) BRIDGE A2095 NORTH	13	12	2	11.56	11.56	ROCK BLANKET REPAIR & DRAIN FLUME
(RT) BRIDGE A2095 NORTH	13	12	2	11.56	11.56	ROCK BLANKET REPAIR & DRAIN FLUME
(LT) BRIDGE A2095 SOUTH	13	12	2	11.56	11.56	ROCK BLANKET REPAIR & DRAIN FLUME
(RT) BRIDGE A2095 SOUTH	13	12	2	11.56	11.56	ROCK BLANKET REPAIR & DRAIN FLUME
(LT) BRIDGE A2097 NORTH	13	12	2	11.56	11.56	ROCK BLANKET REPAIR & DRAIN FLUME
(RT) BRIDGE A2097 NORTH	13	12	2	11.56	11.56	ROCK BLANKET REPAIR & DRAIN FLUME
(LT) BRIDGE A2097 SOUTH	13	12	2	11.56	11.56	ROCK BLANKET REPAIR & DRAIN FLUME
(RT) BRIDGE A2097 SOUTH	13	12	2	11.56	11.56	ROCK BLANKET REPAIR & DRAIN FLUME
			TOTAL	92.48	92.48	
			TOTAL USE	92	92	

EFFECTIVE 10-01-2016

SIGNS						PERFORATED SQUARE STEEL TUBE POST								FOOTINGS		
							2.5 IN						BREAK-AWAY ASSEMBLY	EMBD	BOLT DOWN	REMARKS AND OTHER REQUIRED ITEMS.
SIGN NO.	SIGN SIZE	STATION	HORZ CLEAR IF NOT STD	LOCATION	SIGN DTL. SHT. NO.		POST NO.1 LF	POST NO.2 LF	TOTAL ITEM NO. 9031280 LF	2.25" INSERT ITEM NO. 9031272 LF	ANCHOR 7 GA. ITEM NO. 9031281 LF	OMNI 7 GA. ITEM NO. 9031282 LF	ITEM NO. 9031241 EACH	ITEM NO. 9031010 CU YDS	ITEM NO. 9031020 CU YDS	
1		475+10		ROUTE A RT.			12		12		3			0.09		
2		479+20		ROUTE A LT.			12		12		3			0.09		
						SUB			24		6			0.18		
						TOTAL			24		6			0.20		

D-29

QUANTITY SHEET
SHEET 2 OF 3

STATE OF MISSOURI
ROBERT B. GREEN
NUMBER PE-25339
PROFESSIONAL ENGINEER

THIS SHEET HAS BEEN SIGNED, SEALED AND DATED ELECTRONICALLY.

DATE PREPARED 9/28/2016

ROUTE	STATE
A	MO
DISTRICT	SHEET NO.
CD	3

COUNTY: CAMDEN

JOB NO. J5S3147

CONTRACT ID.

PROJECT NO.

BRIDGE NO. A2095/A2097

DESCRIPTION	DATE

IF A SEAL IS PRESENT ON THIS SHEET IT HAS BEEN ELECTRONICALLY SEALED AND DATED.

MISSOURI HIGHWAYS AND TRANSPORTATION COMMISSION

105 WEST CAPITOL
JEFFERSON CITY, MO 65102
1-888-ASK-MODOT (1-888-275-6636)

QUANTITY SHEET
SHEET 2 OF 3

REV.

EFFECTIVE: 06-08-2016

SIGN	SIZE (IN.)	AREA (SQ. FT.)	QTY	TOTAL AREA	QTY RELOC	TOTAL RELOC AREA	DESCRIPTION
WARNING SIGNS							
W01-1L	48X48	16.00					TURN (SYMBOL LEFT ARROW)
W01-1R	48X48	16.00					TURN (SYMBOL RIGHT ARROW)
W01-2L	48X48	16.00					CURVE (SYMBOL LEFT ARROW)
W01-2R	48X48	16.00					CURVE (SYMBOL RIGHT ARROW)
W01-3L	48X48	16.00					REVERSE TURN (SYMBOL LEFT ARROW)
W01-3R	48X48	16.00					REVERSE TURN (SYMBOL RIGHT ARROW)
W01-4L	48X48	16.00					REVERSE CURVE (SYMBOL LEFT ARROW)
W01-4R	48X48	16.00					REVERSE CURVE (SYMBOL RIGHT ARROW)
W01-4bL	48X48	16.00					DOUBLE ARROW REVERSE CURVE (SYMBOL LEFT ARROWS)
W01-4bR	48X48	16.00					DOUBLE ARROW REVERSE CURVE (SYMBOL RIGHT ARROWS)
W01-4cL	48X48	16.00					TRIPLE ARROW REVERSE CURVE (SYMBOL LEFT ARROWS)
W01-4cR	48X48	16.00					TRIPLE ARROW REVERSE CURVE (SYMBOL RIGHT ARROWS)
W01-6	60X30	12.50					HORIZONTAL ARROW (SYMBOL)
W01-6a	72X36	18.00					HORIZONTAL ARROW (SYMBOL ON PERMANENT BARRICADE)
W01-7	60X30	12.50					DOUBLE HEAD HORIZONTAL ARROW (SYMBOL)
W01-7a	72X36	18.00					DOUBLE HEAD HORIZONTAL ARROW (SYMBOL ON PERMANENT BARRICADE)
W01-8	18X24	3.00					CHEVRON (SYMBOL)
W01-8a	30X36	7.50					CHEVRON (SYMBOL FOR DIVIDED HIGHWAYS)
W03-1	48X48	16.00					STOP AHEAD (SYMBOL)
W03-2	48X48	16.00					YIELD AHEAD (SYMBOL)
W03-3	48X48	16.00					SIGNAL AHEAD (SYMBOL)
W03-4	48X48	16.00					BE PREPARED TO STOP
W03-5	48X48	16.00					SPEED LIMIT AHEAD
W04-1L	48X48	16.00					MERGE (SYMBOL FROM LEFT)
W04-1aL	48X48	16.00					MERGE (LEFT ARROW AT LANE DROP)
W04-1R	48X48	16.00					MERGE (SYMBOL FROM RIGHT)
W04-1aR	48X48	16.00					MERGE (RIGHT ARROW AT LANE DROP)
W05-1	48X48	16.00					ROAD/BRIDGE/RAMP NARROWS
W05-3	48X48	16.00					ONE LANE BRIDGE
W05-5	48X48	16.00					NARROW LANES
W06-1	48X48	16.00					DIVIDED HIGHWAY (SYMBOL)
W06-2	48X48	16.00					DIVIDED HIGHWAY END (SYMBOL)
W06-3	48X48	16.00					TWO WAY TRAFFIC (SYMBOL)
W07-3a	30X24	5.00					NEXT XX MILES (PLAQUE)
W08-1	48X48	16.00					BUMP
W08-2	48X48	16.00					DIP
W08-3	48X48	16.00					PAVEMENT ENDS
W08-4	48X48	16.00					SOFT SHOULDER
W08-5	48X48	16.00					SLIPPERY WHEN WET (SYMBOL)
W08-6	48X48	16.00					TRUCK CROSSING WITH FLAGS
W08-6c	48X48	16.00					TRUCK ENTRANCE
W08-7	36X36	9.00					LOOSE GRAVEL
W08-9	48X48	16.00					LOW SHOULDER
W08-11	48X48	16.00					UNEVEN LANES
W08-12	48X48	16.00					NO CENTER LINE
W10-1	42 RND.	9.62					RAILROAD CROSSING
W012-1	24X24	4.00					DOUBLE DOWN ARROW (SYMBOL)
W012-2	48X48	16.00					LOW CLEARANCE (SYMBOL)
W012-2x	24X18	3.00					LOW CLEARANCE (PLAQUE)
W012-2a	84X24	14.00					OVERHEAD LOW CLEARANCE (FEET AND INCHES)
W08-15	48X48	16.00					GROOVED PAVEMENT
W08-15p	30X24	5.00					MOTORCYCLE (PLAQUE)
W08-17	48X48	16.00					SHOULDER DROP-OFF (SYMBOL)
W08-17p	30X24	5.00					SHOULDER DROP-OFF (PLAQUE)
SPECIAL	120X60	50.00					LOW CLEARANCE XX FT XX IN XX MILES AHEAD
SPECIAL	120X60	50.00					WIDTH RESTRICTION XX FT XX IN XX MILES AHEAD
W013-1	30X30	6.25					ADVISORY SPEED (PLAQUE)
W016-2	30X24	5.00					XXX FEET (PLAQUE)
W016-3	30X24	5.00					X MILE (PLAQUE)
W020-1	48X48	16.00	4	64			ROAD/BRIDGE/RAMP WORK AHEAD
W020-2	48X48	16.00	4	64			DETOUR AHEAD
W020-3a	48X48	16.00	4	64			ROAD CLOSED 500 FT
W020-4	48X48	16.00					ONE LANE ROAD AHEAD
W020-5	48X48	16.00					RIGHT/CENTER/LEFT LANE CLOSED AHEAD
W020-5a	48X48	16.00					2 RIGHT/CENTER/LEFT LANES CLOSED AHEAD
W020-6a	48X48	16.00					RIGHT/CENTER/LEFT LANE CLOSED
W020-7a	48X48	16.00					FLAGGER (SYMBOL) WITH FLAGS
W021-2	36X36	9.00					FRESH OIL
W021-5	48X48	16.00					SHOULDER WORK AHEAD
W022-1	48X48	16.00					BLASTING ZONE AHEAD
W022-2	42X36	10.50					TURN OFF 2-WAY RADIO AND PHONE
W022-3	42X36	10.50					END BLASTING ZONE
W022-6e	21X15	2.19					WET PAINT (ARROW PIVOTS)
GUIDE SIGNS							
SPECIAL	36X36	9.00					FRESH OIL/LOOSE GRAVEL
E05-1	36X48	12.00					GORE EXIT
E05-2	48X36	12.00					EXIT OPEN
E05-2a	48X36	12.00					EXIT CLOSED
G020-1	60X24	10.00					ROAD WORK NEXT XX MILES
G020-2	48X24	8.00					END ROAD WORK
G020-4	36X18	4.50					PILOT CAR FOLLOW ME
SPECIAL	42X30	8.75					PLEASE WAIT FOR PILOT CAR
G020-5aP	36X24	6.00					WORK ZONE (PLAQUE)
M04-8a	24X18	3.00	3	9			END DETOUR
M04-9L	48X36	12.00					DETOUR (LEFT ARROW)
M04-9R	48X36	12.00					DETOUR (RIGHT ARROW)
M04-10L	48X18	6.00					DETOUR (ARROW LEFT)
M04-10R	48X18	6.00					DETOUR (ARROW RIGHT)
REGULATORY SIGNS							
R1-1	48X48	13.25					STOP
R1-2	48 TRI.	6.93					YIELD
R1-2a	36X36	9.00					TO ONCOMING TRAFFIC (PLAQUE)
R1-3	20X9	1.25					X-WAY (PLAQUE)
R2-1	36X48	12.00					SPEED LIMIT XX
R3-1	48X48	16.00					NO RIGHT TURN (SYMBOL)
R3-2	48X48	16.00					NO LEFT TURN (SYMBOL)
R3-3	36X36	9.00					NO TURNS
R3-4	48X48	16.00					NO U-TURN (SYMBOL)
R3-7L	30X30	6.25					LEFT LANE MUST TURN LEFT
R3-7R	30X30	6.25					RIGHT LANE MUST TURN RIGHT
R4-1	36X48	12.00					DO NOT PASS
R4-2	36X48	12.00					PASS WITH CARE
R4-7aL	36X48	12.00					KEEP LEFT (HORIZONTAL ARROW)
R4-7a	36X48	12.00					KEEP RIGHT (HORIZONTAL ARROW)
R5-1	30X30	6.25					DO NOT ENTER
R5-1a	36X24	6.00					WRONG WAY
R6-1L	48X18	6.00					ONE WAY ARROW (LEFT)
R6-1R	48X18	6.00					ONE WAY ARROW (RIGHT)
R6-2L	24X30	5.00					ONE WAY (LEFT)
R6-2R	24X30	5.00					ONE WAY (RIGHT)
R10-6	24X36	6.00					STOP HERE ON RED (45° ARROW)
R11-2	48X30	10.00	4	40			ROAD CLOSED
R11-3a	60X30	12.50	6	75			ROAD CLOSED XX MILES AHEAD LOCAL TRAFFIC ONLY (1@ 1, 1@ 3, 1@ 8, 1@ 9, 1@ 10, 1@ 12)
R11-4	60X30	12.50					ROAD CLOSED TO THRU TRAFFIC
S4-4	36X15	3.75					WHEN FLASHING
CONST-3A	60X48	20.00					FINE SIGN
CONST-3X	56X12	4.67					SPEEDING/PASSING (PLATE)
MISCELLANEOUS SIGNS							
SPECIAL	36X78	19.5	78	1521			ROUTE DETOUR ASSEMBLY
616-10.05 CONSTRUCTION SIGNS TOTAL				1837			
616-10.10 RELOCATED SIGNS TOTAL							

ITEM NUMBER	TOTAL QTY	DESCRIPTION
6122008		IMPACT ATTENUATOR (8 SAND BARRELS)
6122009		IMPACT ATTENUATOR (9 SAND BARRELS)
6122010		IMPACT ATTENUATOR (10 SAND BARRELS)
6122012		IMPACT ATTENUATOR (12 SAND BARRELS)
6122014		IMPACT ATTENUATOR (14 SAND BARRELS)
6122017		IMPACT ATTENUATOR (17 SAND BARRELS)
6122019		IMPACT ATTENUATOR (19 SAND BARRELS)
6122020		REPLACEMENT SAND BARREL
6122030		IMPACT ATTENUATOR (RELOCATION)
6123000A		TRUCK OR TRAILER MOUNTED ATTENUATOR (TMA)
6161007		SPEED LIMIT AND STROBE LIGHT ASSEMBLY
6161008	4	ADVANCED WARNING RAIL SYSTEM
6161009	4	FLAG ASSEMBLY
6161020		CHANNELIZER (DRUM-LIKE)
6161022		CHANNELIZER (CONES)
6161024		CHANNELIZER (TRIM LINE) WITH LIGHT
6161025		CHANNELIZER (TRIM LINE)
6161026		CHANNELIZER (VERTICAL PANEL)
6161027		CHANNELIZER (VERTICAL PANEL) WITH LIGHT
6161028		CHANNELIZER
6161030		TYPE III MOVEABLE BARRICADE
6161031	12	TYPE III MOVEABLE BARRICADE WITH LIGHT
6161033		DIRECTION INDICATOR BARRICADE
6161034		DIRECTION INDICATOR BARRICADE, WITH LIGHT
6161040		FLASHING ARROW PANEL
6161047		TYPE III OBJECT MARKER
6161051		WARNING LIGHT, TYPE A
6161052		WARNING LIGHT, TYPE B
6161053		WARNING LIGHT, TYPE C
6161055		SEQUENTIAL FLASHING WARNING LIGHT
6161070		TUBULAR MARKER
6161095		RADAR SPEED ADVISORY SYSTEM
6161096		CHANGEABLE MESSAGE SIGN, COMMISSION FURNISHED/RETAINED
6161098A		CHANGEABLE MESSAGE SIGN WITHOUT COMMUNICATION INTERFACE, CONTRACTOR FURNISHED/RETAINED
6161099	6	CHANGEABLE MESSAGE SIGN WITH COMMUNICATION INTERFACE, CONTRACTOR FURNISHED/RETAINED
6162000A		WORK ZONE TRAFFIC SIGNAL SYSTEM
6173600D		CONTRACTOR FURNISHED/RETAINED TEMPORARY TRAFFIC BARRIER
6173602B		CONTRACTOR FURNISHED/COMMISSION RETAINED TEMPORARY TRAFFIC BARRIER
6174000A		TEMPORARY TRAFFIC BARRIER HEIGHT TRANSITION
6175010A		RELOCATING TEMPORARY TRAFFIC BARRIER
6176000B		COMMISSION FURNISHED/RETAINED TEMPORARY TRAFFIC BARRIER
6177000B		COMMISSION FURNISHED/RETAINED TEMPORARY TRAFFIC BARRIER HEIGHT TRANSITION
9019400		TEMPORARY LIGHTING
9029400		TEMPORARY TRAFFIC SIGNALS
9029401		TEMPORARY TRAFFIC SIGNALS AND LIGHTING

QUANTITY SHEET
SHEET 3 OF 3

STATE OF MISSOURI
ROBERT B. GREEN
NUMBER PE-25339
PROFESSIONAL ENGINEER
THIS SHEET HAS BEEN SIGNED, SEALED AND DATED ELECTRONICALLY.

DATE PREPARED 9/28/2016
ROUTE A | STATE MO
DISTRICT CD | SHEET NO. 3
COUNTY CAMDEN
JOB NO. J5S3147
CONTRACT ID.
PROJECT NO.
BRIDGE NO. A2095/A2097

DATE	DESCRIPTION

MISSOURI HIGHWAYS AND TRANSPORTATION COMMISSION
105 WEST CAPITOL
JEFFERSON CITY, MO 65102
1-888-ASK-MODOT (1-888-275-6636)

QUANTITY SHEET - 2BS
SHEET 3 OF 3

IF A SEAL IS PRESENT ON THIS SHEET IT HAS BEEN ELECTRONICALLY SEALED AND DATED.

REV.

GENERAL NOTES :

ANY WORK INDICATED ON THE PLANS THAT EXTENDS BEYOND THE PROJECT LIMITS IS CONSIDERED INCIDENTAL TO AND A PART OF THE CONSTRUCTION OF THIS PROJECT.

SEE EROSION CONTROL SHEETS FOR TEMPORARY EROSION CONTROL DEVICES AND PLACEMENT.

CONTRACTOR SHALL VERIFY STRIPING PRIOR TO CONSTRUCTION.

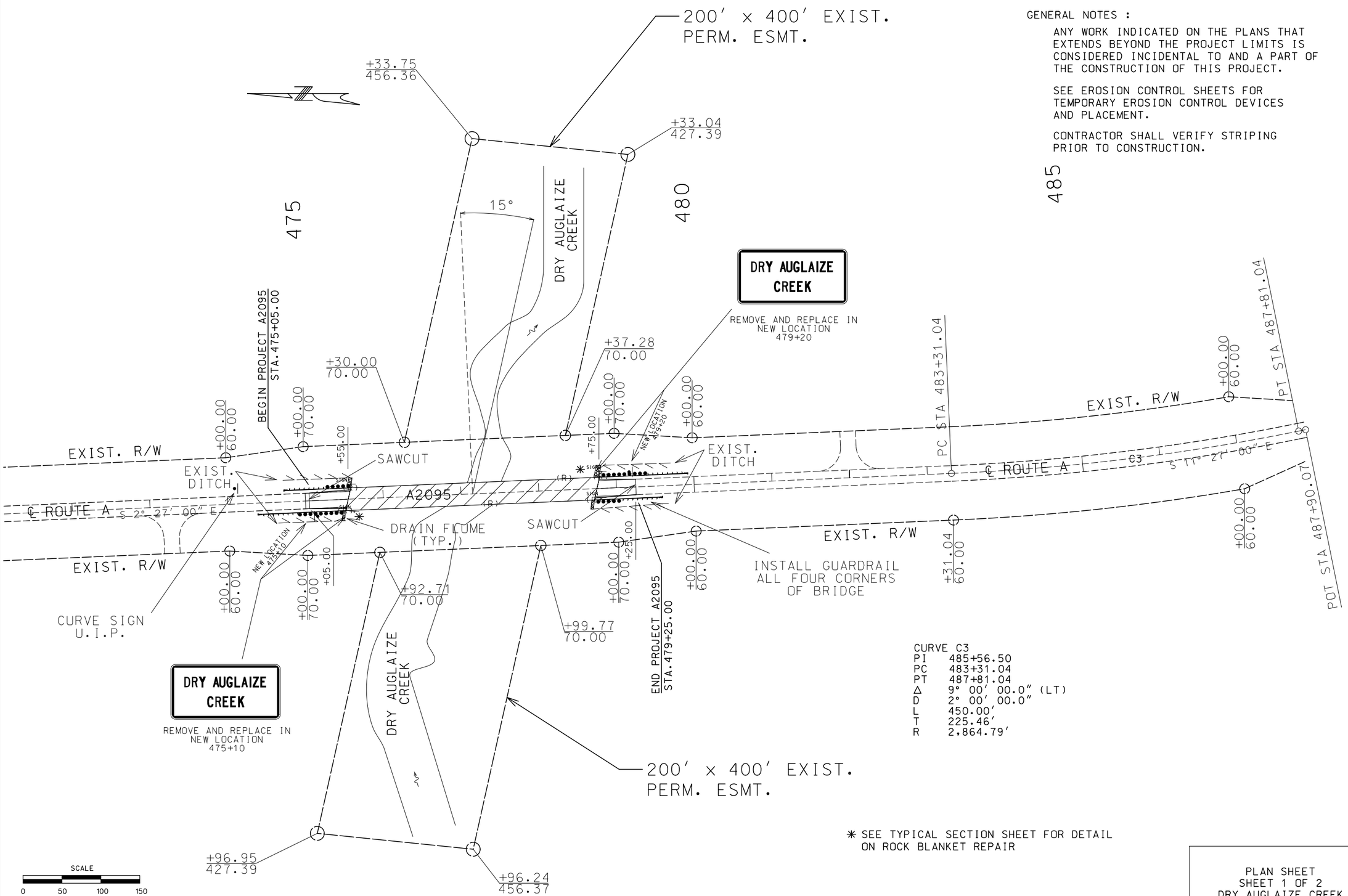

CURVE C3

PI	485+56.50
PC	483+31.04
PT	487+81.04
Δ	9° 00' 00.0" (LT)
D	2° 00' 00.0"
L	450.00'
T	225.46'
R	2,864.79'

✳ SEE TYPICAL SECTION SHEET FOR DETAIL ON ROCK BLANKET REPAIR

PLAN SHEET
SHEET 1 OF 2
DRY AUGLAIZE CREEK
BRIDGE A2095

STATE OF MISSOURI
ROBERT B. GREEN
NUMBER PE-25339
PROFESSIONAL ENGINEER

THIS SHEET HAS BEEN SIGNED, SEALED AND DATED ELECTRONICALLY.

DATE PREPARED	9/27/2016
ROUTE	A
STATE	MO
DISTRICT	CD
SHEET NO.	4
COUNTY	CAMDEN
JOB NO.	J5S3147
CONTRACT ID.	
PROJECT NO.	
BRIDGE NO.	A2095

DESCRIPTION

DATE

MISSOURI HIGHWAYS AND TRANSPORTATION COMMISSION

105 WEST CAPITOL
JEFFERSON CITY, MO 65102
1-888-ASK-MODOT (1-888-275-6636)

PLAN SHEET
DRY AUGLAIZE CREEK – A2095
SHEET 1 OF 2

IF A SEAL IS PRESENT ON THIS SHEET IT HAS BEEN ELECTRONICALLY SEALED AND DATED.

REV.

GENERAL NOTES :

ANY WORK INDICATED ON THE PLANS THAT EXTENDS BEYOND THE PROJECT LIMITS IS CONSIDERED INCIDENTAL TO AND A PART OF THE CONSTRUCTION OF THIS PROJECT.

SEE EROSION CONTROL SHEETS FOR TEMPORARY EROSION CONTROL DEVICES AND PLACEMENT.

CONTRACTOR SHALL VERIFY STRIPING PRIOR TO CONSTRUCTION.

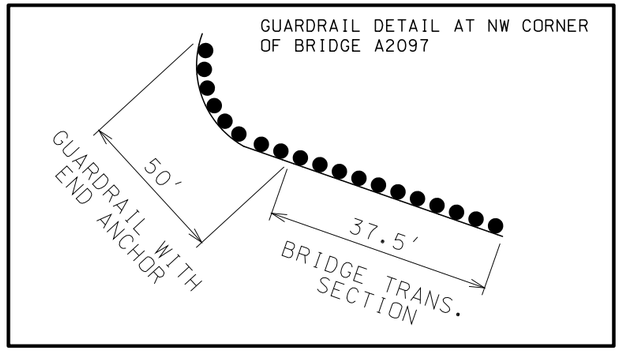

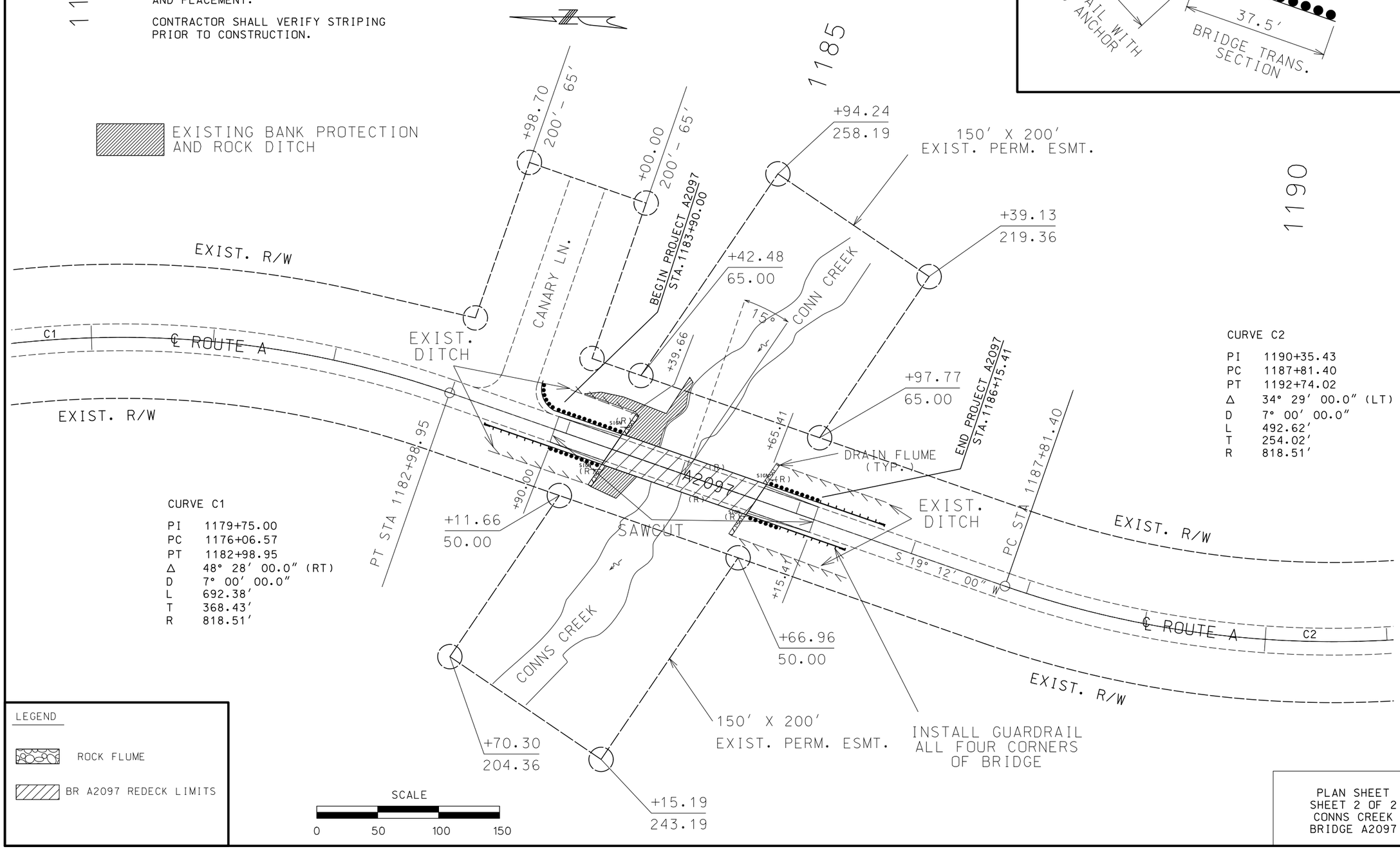

CURVE C1

PI	1179+75.00
PC	1176+06.57
PT	1182+98.95
Δ	48° 28' 00.0" (RT)
D	7° 00' 00.0"
L	692.38'
T	368.43'
R	818.51'

CURVE C2

PI	1190+35.43
PC	1187+81.40
PT	1192+74.02
Δ	34° 29' 00.0" (LT)
D	7° 00' 00.0"
L	492.62'
T	254.02'
R	818.51'

LEGEND

ROCK FLUME

BR A2097 REDECK LIMITS

PLAN SHEET
SHEET 2 OF 2
CONNS CREEK
BRIDGE A2097

STATE OF MISSOURI
ROBERT B. GREEN
NUMBER PE-25339
PROFESSIONAL ENGINEER

THIS SHEET HAS BEEN SIGNED, SEALED AND DATED ELECTRONICALLY.

DATE PREPARED	
9/27/2016	
ROUTE A	STATE MO
DISTRICT CD	SHEET NO. 5
COUNTY CAMDEN	
JOB NO. J5S3147	
CONTRACT ID.	
PROJECT NO.	
BRIDGE NO. A2097	

DATE	DESCRIPTION

IF A SEAL IS PRESENT ON THIS SHEET IT HAS BEEN ELECTRONICALLY SEALED AND DATED.

MISSOURI HIGHWAYS AND TRANSPORTATION COMMISSION

105 WEST CAPITOL
JEFFERSON CITY, MO 65102
1-888-ASK-MODOT (1-888-275-6636)

PLAN SHEET
CONNS CREEK - A2097
SHEET 1 OF 2

REV.

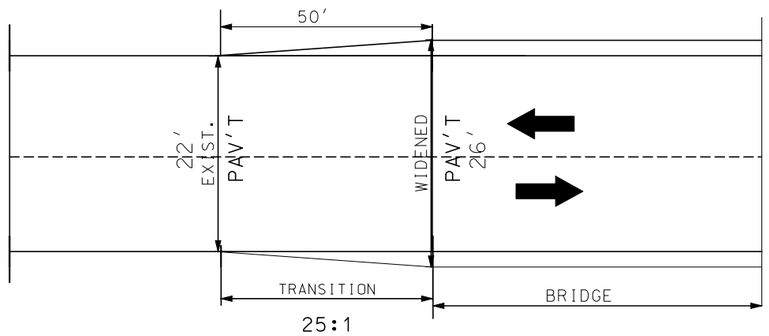

TRANSITION AT BRIDGE
FOR 50' TAPER

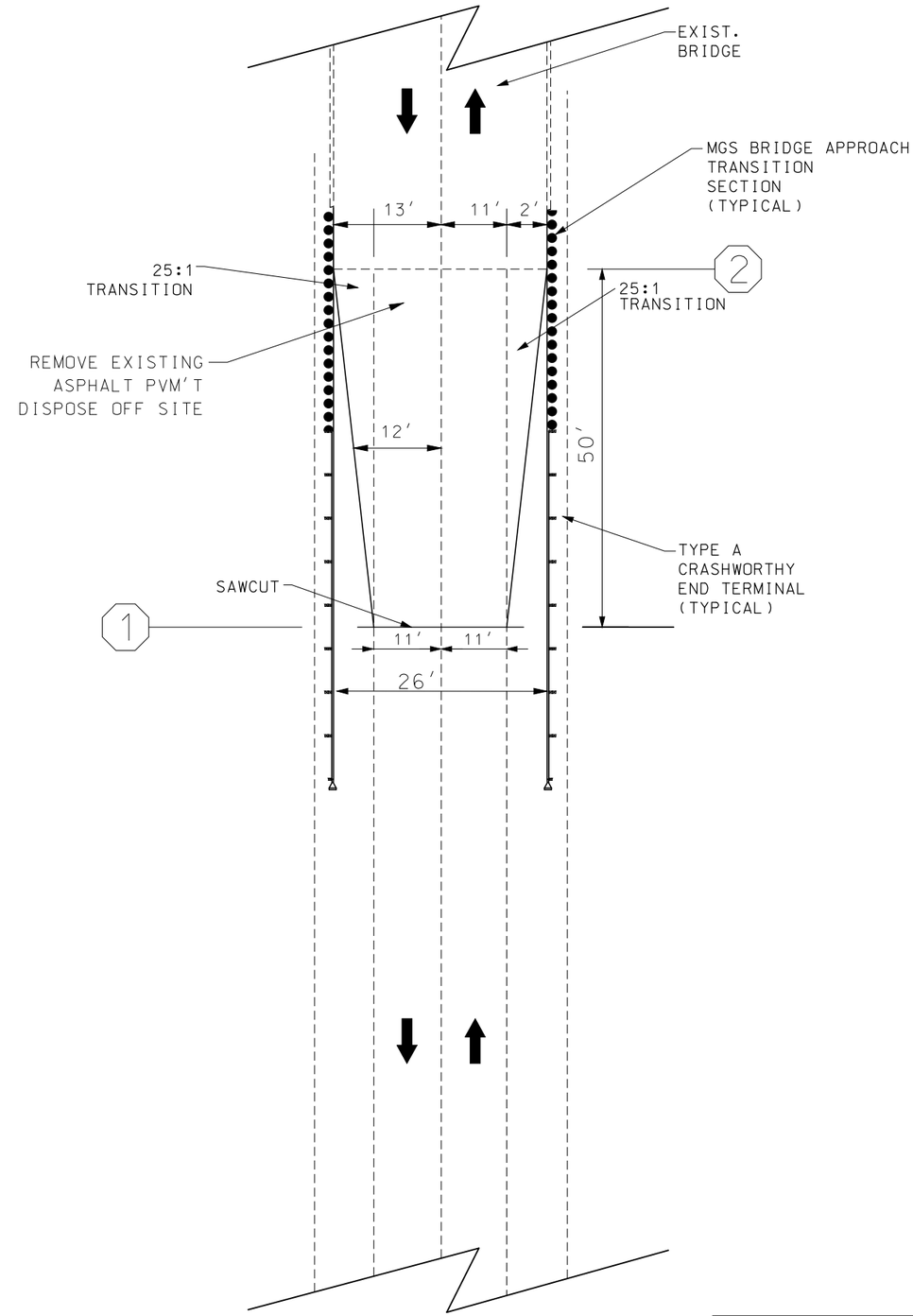

BRIDGE	END	1	2
A2095	NORTH	475+05.00	475+55.00
	SOUTH	479+25.00	478+75.00

BRIDGE	END	1	2
A2097	NORTH	1183+90.00	1184+39.66
	SOUTH	1186+15.41	1185+65.41

SPECIAL SHEET
1 OF 1

STATE OF MISSOURI
ROBERT B. GREEN
NUMBER PE-25339
PROFESSIONAL ENGINEER

THIS SHEET HAS BEEN SIGNED, SEALED AND DATED ELECTRONICALLY.

DATE PREPARED	9/27/2016
ROUTE	A
STATE	MO
DISTRICT	CD
SHEET NO.	6
COUNTY	CAMDEN
JOB NO.	J5S3147
CONTRACT ID.	
PROJECT NO.	
BRIDGE NO.	A2095/A2097

DATE	DESCRIPTION

IF A SEAL IS PRESENT ON THIS SHEET IT HAS BEEN ELECTRONICALLY SEALED AND DATED.

MISSOURI HIGHWAYS AND TRANSPORTATION COMMISSION

105 WEST CAPITOL
JEFFERSON CITY, MO 65102
1-888-ASK-MODOT (1-888-275-6636)

SPECIAL SHEET
BRIDGE TRANSITION
SHEET 1 OF 1

REV.

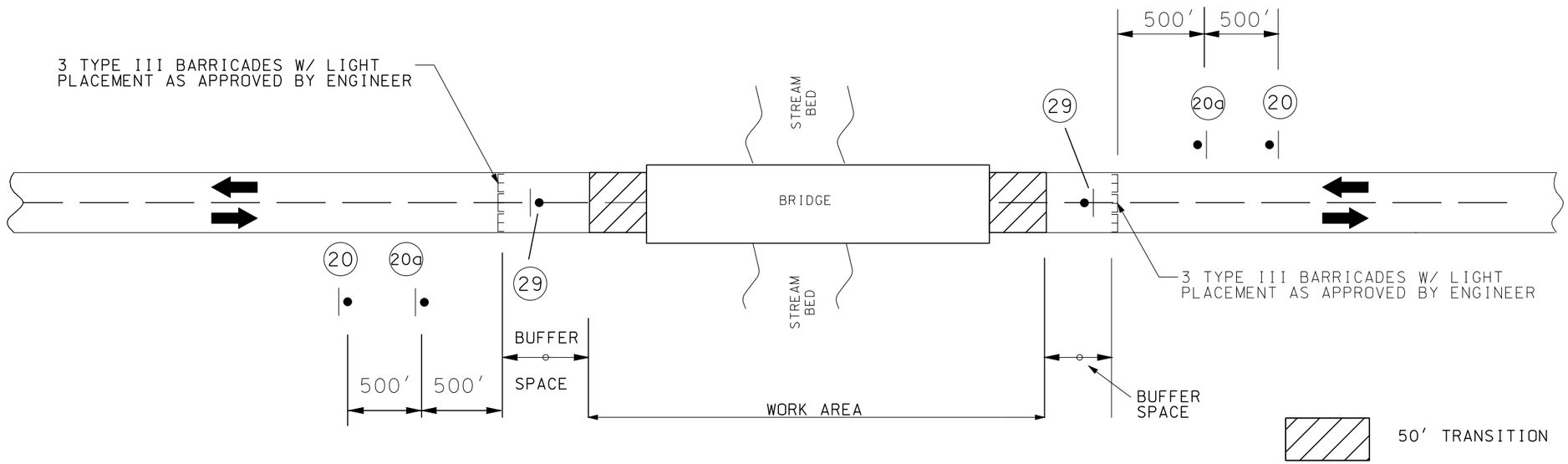

GENERAL NOTES:

1. PLACEMENT OF TRAFFIC CONTROL SIGNS IS APPROXIMATE AND MAY BE ADJUSTED TO FIT FIELD CONDITIONS AS APPROVED BY THE ENGINEER.
2. SIGN SPACING 500′ OR AS DIRECTED BY THE ENGINEER
3. ANY EXISTING SIGN THAT CONFLICTS WITH THE TRAFFIC CONTROL SIGNING SHALL BE COMPLETELY COVERED OR REMOVED
4. SIGNS ASSOCIATED WITH TYPE III BARRICADE SHALL BE MOUNTED ON POST BEHIND BARRICADE
5. CMS MESSAGES AS APPROVED BY ENGINEER
6. ALL SIGNS SHOWN ON THIS SHEET ARE NON-PORTABLE AND SHALL REMAIN IN PLACE FOR THE DURATION OF THE PROJECT

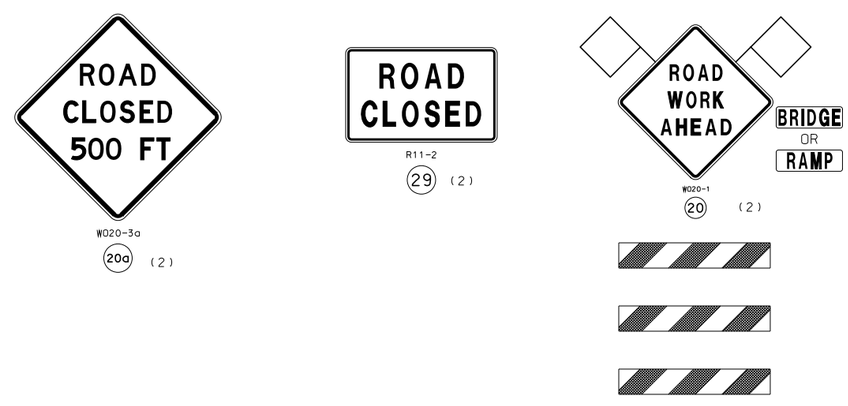

TRAFFIC CONTROL LEGEND

- SIGN
- BARRICADE
- WORK ZONE

NOT TO SCALE

TRAFFIC CONTROL
SHEET 1 OF 3

STATE OF MISSOURI
ROBERT B. GREEN
NUMBER PE-25339
PROFESSIONAL ENGINEER

THIS SHEET HAS BEEN SIGNED, SEALED AND DATED ELECTRONICALLY.

DATE PREPARED	
9/27/2016	
ROUTE: A	STATE: MO
DISTRICT: CD	SHEET NO.: 7
COUNTY: CAMDEN	
JOB NO.: J5S3147	
CONTRACT ID.	
PROJECT NO.	
BRIDGE NO.: A2095/A2097	

DESCRIPTION	DATE

IF A SEAL IS PRESENT ON THIS SHEET IT HAS BEEN ELECTRONICALLY SEALED AND DATED.

MISSOURI HIGHWAYS AND TRANSPORTATION COMMISSION
105 WEST CAPITOL
JEFFERSON CITY, MO 65102
1-888-ASK-MODOT (1-888-275-6636)

TRAFFIC CONTROL SHEET
WORK ZONE
SHEET 1 OF 3

REV.

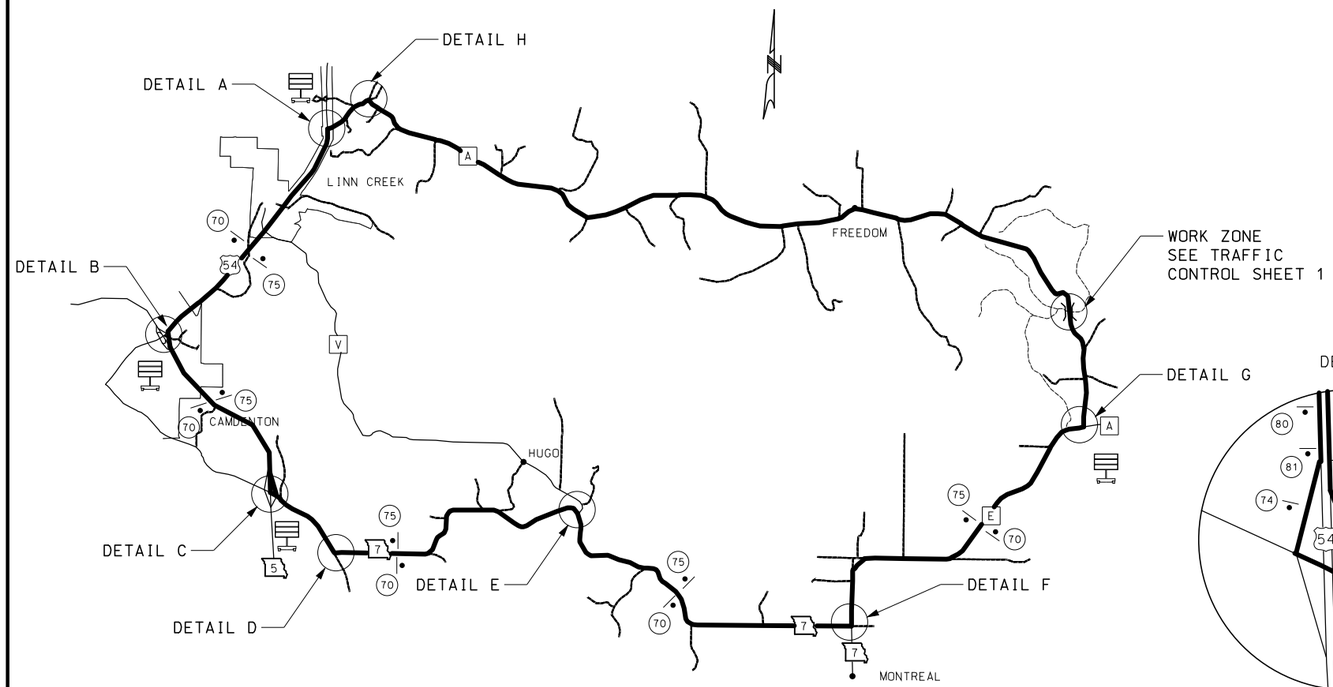

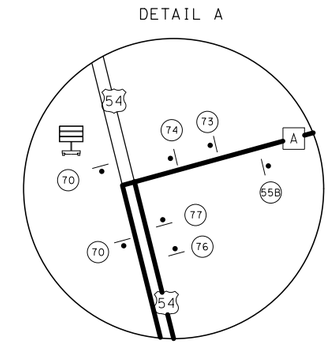

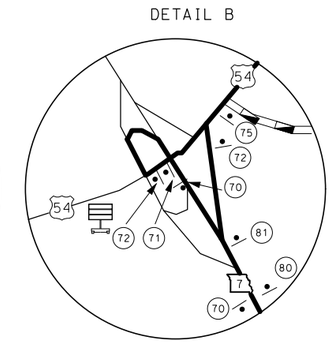

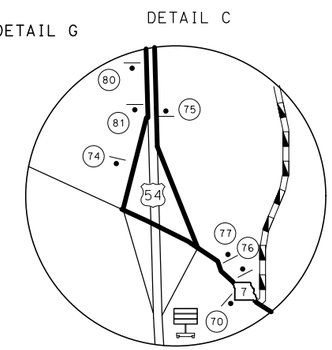

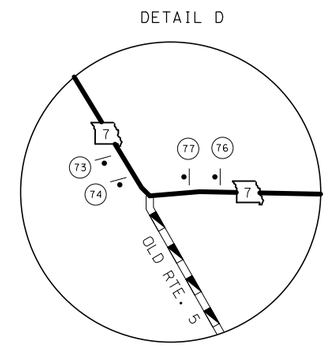

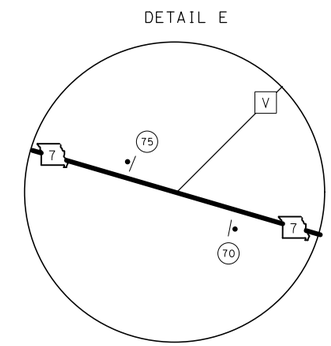

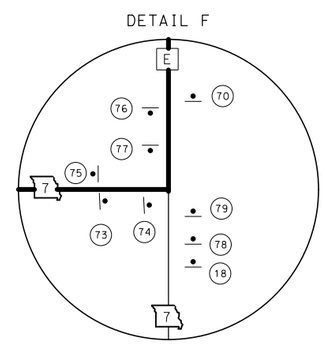

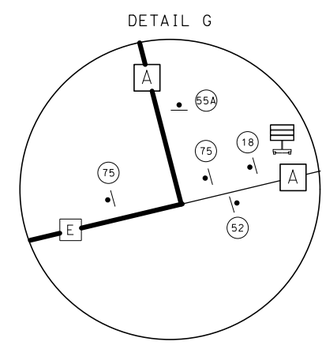

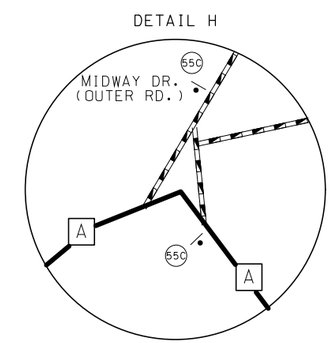

NOTES:

ALL SIGNS SHOWN ON THIS SHEET ARE NON-PORTABLE AND SHALL REMAIN IN PLACE FOR THE DURATION OF THE PROJECT

NOTE:
✳ SIGN (70) AND (75) SPACED AT 2 MILE INTERVIALS

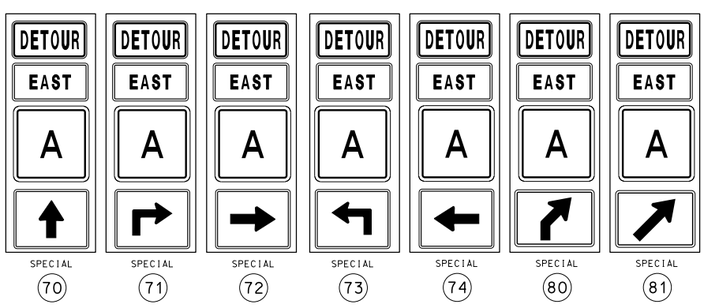

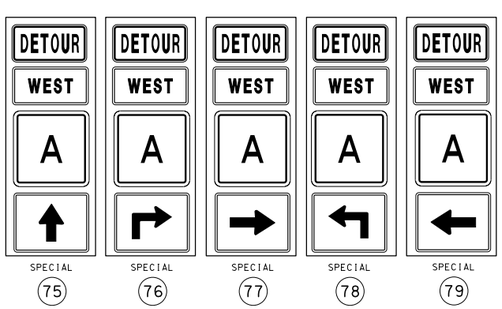

TRAFFIC CONTROL LEGEND

SIGN

CHANGEABLE MESSAGE BOARD

TRAFFIC CONTROL

BRIDGE A2095-DETOUR SIGNING
SHEET 2 OF 3

STATE OF MISSOURI
ROBERT B. GREEN
NUMBER PE-25339
PROFESSIONAL ENGINEER

THIS SHEET HAS BEEN SIGNED, SEALED AND DATED ELECTRONICALLY.

DATE PREPARED	
9/27/2016	
ROUTE	STATE
A	MO
DISTRICT	SHEET NO.
CD	8
COUNTY	
CAMDEN	
JOB NO.	
J5S3147	
CONTRACT ID.	
PROJECT NO.	
BRIDGE NO.	
A2095	

DATE	DESCRIPTION

MISSOURI HIGHWAYS AND TRANSPORTATION COMMISSION
105 WEST CAPITOL
JEFFERSON CITY, MO 65102
1-888-ASK-MODOT (1-888-275-6636)

TRAFFIC CONTROL SHEET
DETOUR - A2095
SHEET 2 OF 3

IF A SEAL IS PRESENT ON THIS SHEET IT HAS BEEN ELECTRONICALLY SEALED AND DATED.

REV.

DETOUR OF BRIDGE A2097
OVER CONN CREEK

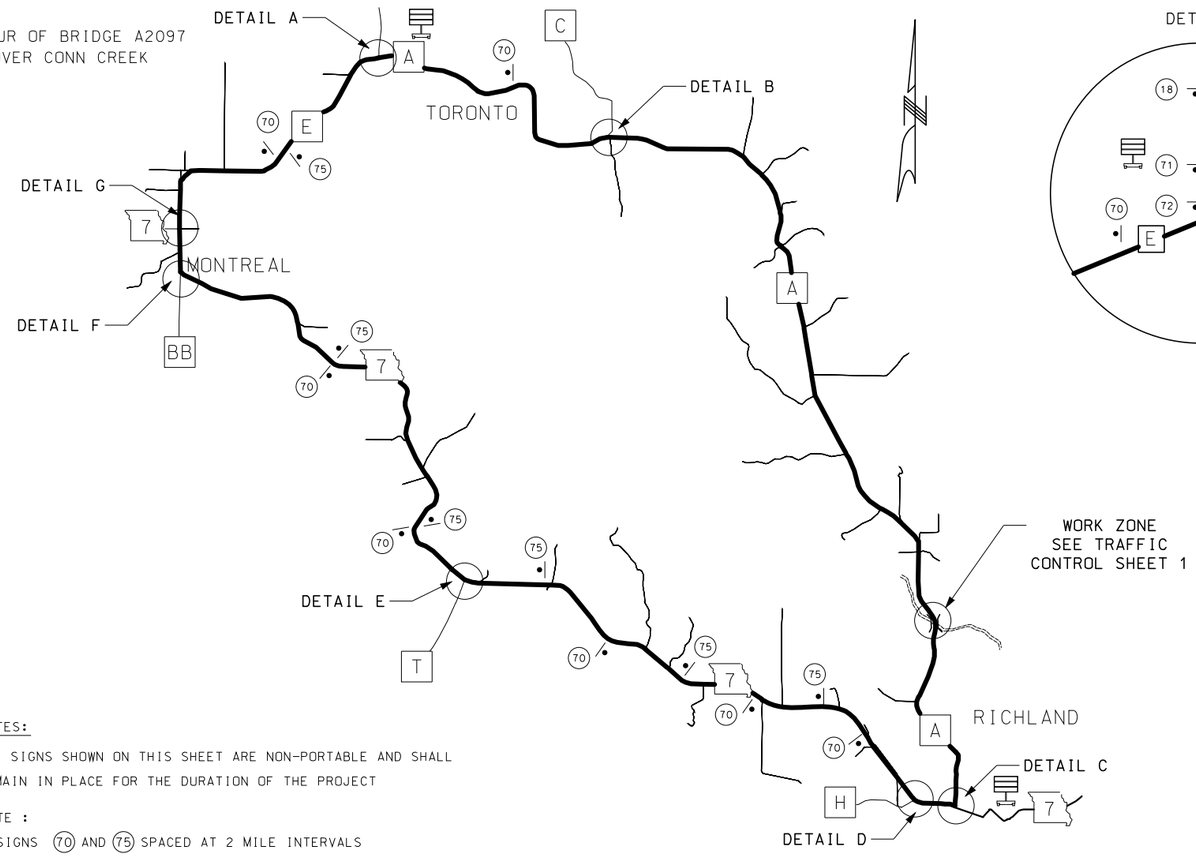

NOTES:

ALL SIGNS SHOWN ON THIS SHEET ARE NON-PORTABLE AND SHALL REMAIN IN PLACE FOR THE DURATION OF THE PROJECT

NOTE :

✳ SIGNS (70) AND (75) SPACED AT 2 MILE INTERVALS

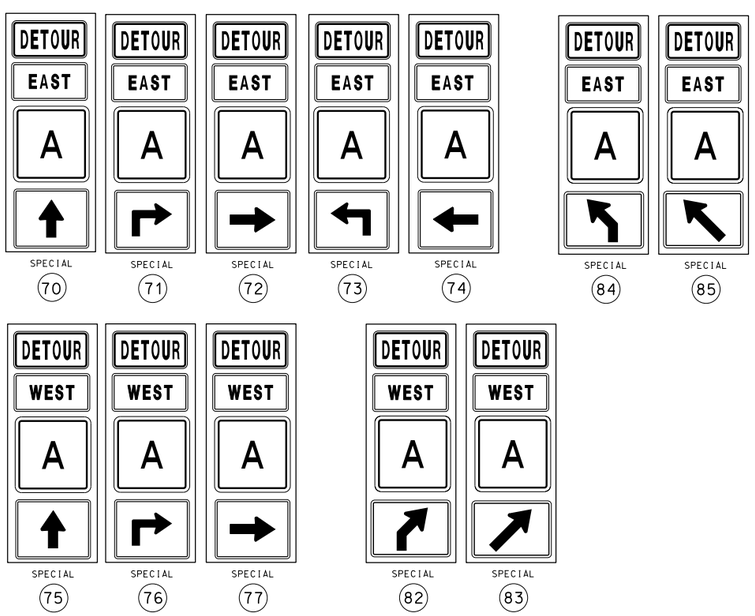

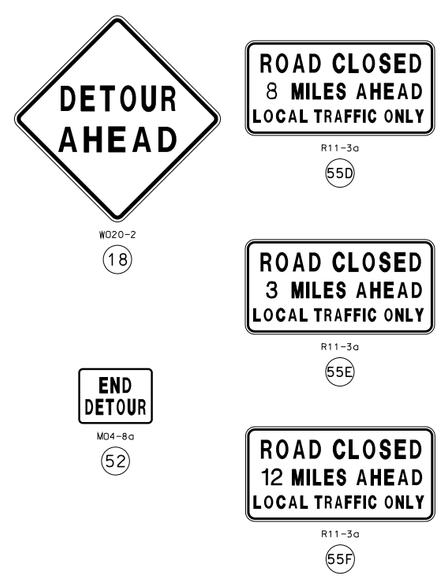

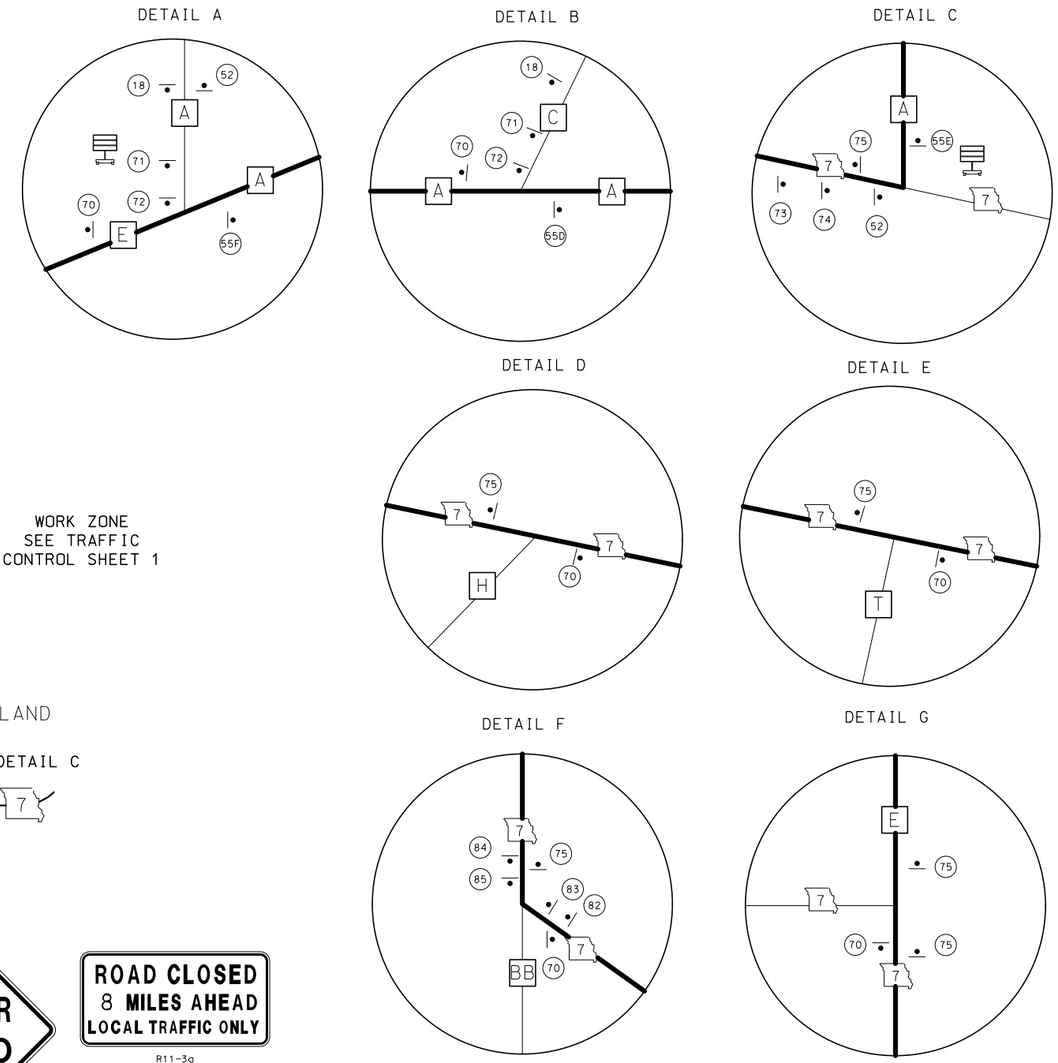

TRAFFIC CONTROL LEGEND

| SIGN

CHANGEABLE MESSAGE BOARD

TRAFFIC CONTROL

BRIDGE A2097-DETOUR SIGNING
SHEET 3 OF 3

STATE OF MISSOURI
ROBERT B. GREEN
NUMBER PE-25339
PROFESSIONAL ENGINEER

THIS SHEET HAS BEEN SIGNED, SEALED AND DATED ELECTRONICALLY.

DATE PREPARED	
9/27/2016	
ROUTE A	STATE MO
DISTRICT CD	SHEET NO. 9
COUNTY CAMDEN	
JOB NO. J5S3147	
CONTRACT ID.	
PROJECT NO.	
BRIDGE NO. A2097	

DATE	DESCRIPTION

MISSOURI HIGHWAYS AND TRANSPORTATION COMMISSION
105 WEST CAPITOL
JEFFERSON CITY, MO 65102
1-888-ASK-MODOT (1-888-275-6636)

TRAFFIC CONTROL SHEET
DETOUR - A2097
SHEET 3 OF 3

IF A SEAL IS PRESENT ON THIS SHEET IT HAS BEEN ELECTRONICALLY SEALED AND DATED.

REV.

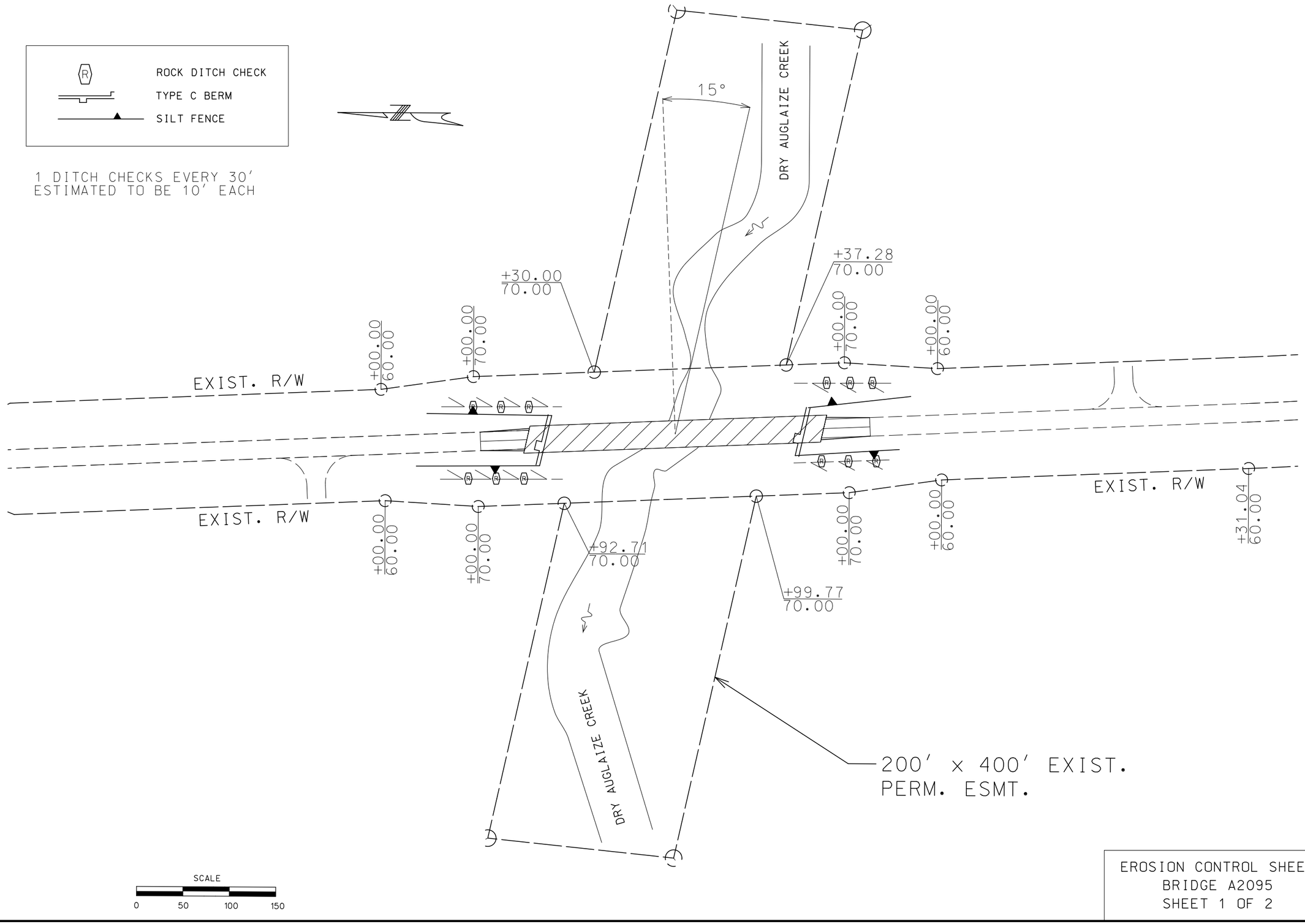

EROSION CONTROL SHEET
BRIDGE A2095
SHEET 1 OF 2

STATE OF MISSOURI
ROBERT B. GREEN
NUMBER
PE-25339
PROFESSIONAL ENGINEER

THIS SHEET HAS BEEN SIGNED, SEALED AND DATED ELECTRONICALLY.

DATE PREPARED	9/27/2016
ROUTE	A
STATE	MO
DISTRICT	CD
SHEET NO.	10
COUNTY	CAMDEN
JOB NO.	J5P3147
CONTRACT ID.	
PROJECT NO.	
BRIDGE NO.	A2095

DATE	DESCRIPTION

MISSOURI HIGHWAYS AND TRANSPORTATION COMMISSION

105 WEST CAPITOL
JEFFERSON CITY, MO 65102
1-888-ASK-MODOT (1-888-275-6636)

EROSION CONTROL SHEET
BRIDGE A2095
SHEET 1 OF 2

IF A SEAL IS PRESENT ON THIS SHEET IT HAS BEEN ELECTRONICALLY SEALED AND DATED.

REV.

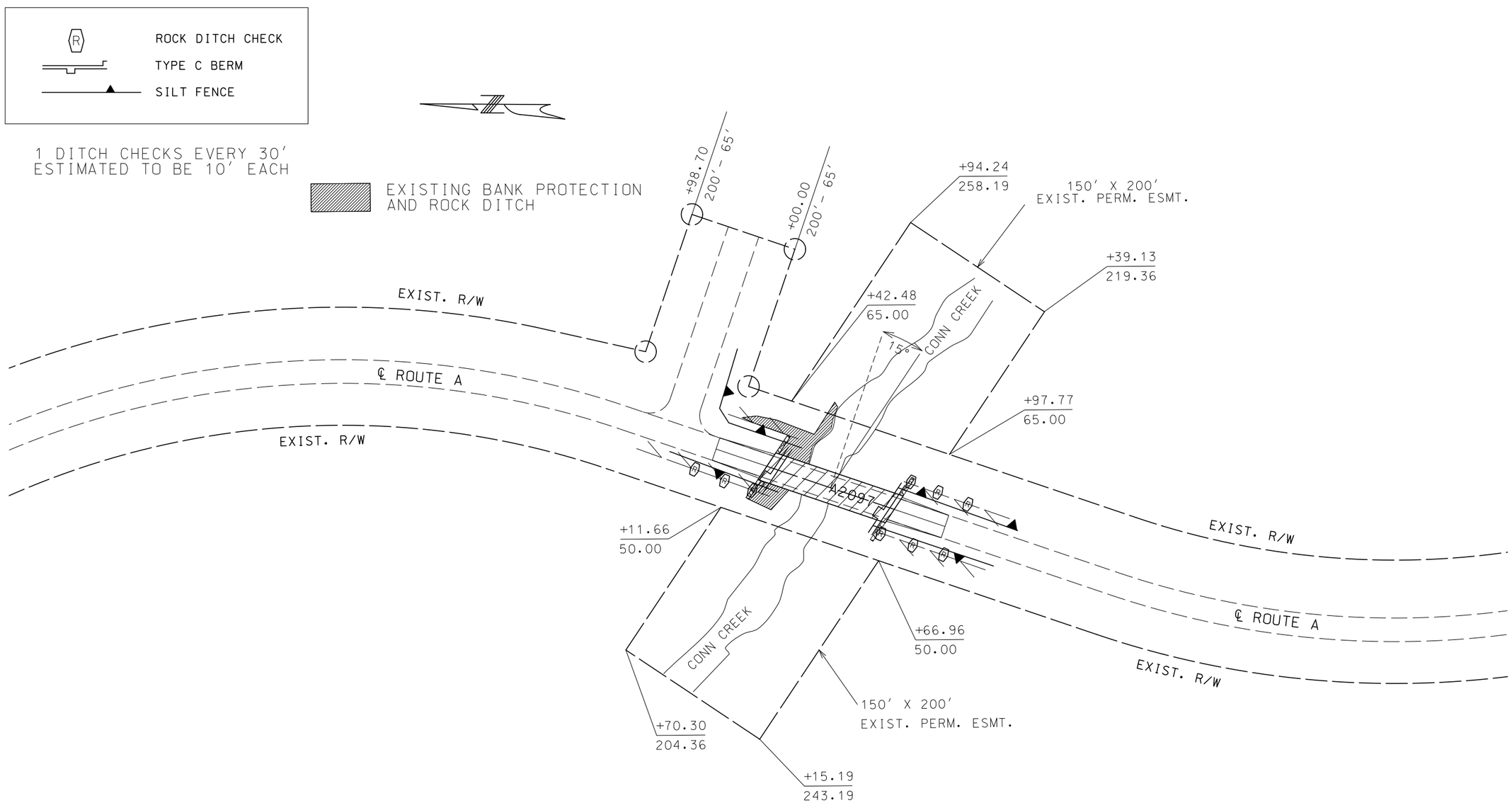

SCALE

0 50 100 150

EROSION CONTROL SHEET
BRIDGE A2097
SHEET 2 OF 2

STATE OF MISSOURI
ROBERT B. GREEN
NUMBER PE-25339
PROFESSIONAL ENGINEER

THIS SHEET HAS BEEN SIGNED, SEALED AND DATED ELECTRONICALLY.

DATE PREPARED	9/27/2016
ROUTE	A
STATE	MO
DISTRICT	CD
SHEET NO.	11
COUNTY	CAMDEN
JOB NO.	J5P3147
CONTRACT ID.	
PROJECT NO.	
BRIDGE NO.	A2097

DATE	DESCRIPTION

IF A SEAL IS PRESENT ON THIS SHEET IT HAS BEEN ELECTRONICALLY SEALED AND DATED.

MISSOURI HIGHWAYS AND TRANSPORTATION COMMISSION

105 WEST CAPITOL
JEFFERSON CITY, MO 65102
1-888-ASK-MODOT (1-888-275-6636)

EROSION CONTROL SHEET
BRIDGE A2097
SHEET 2 OF 2

REV.

SEC/SUR 23 TWP 38N RGE 15W

U.I.P. AND REDECK EXISTING (96'- 124'- 96') CONTINUOUS COMPOSITE PLATE GIRDER SPANS (15° L.A.)

Required Lap Length For Bar Splices ✱✱	
Bar Size	Splice Length
4	2'-7"
5	3'-3"
6	3'-10"
7	4'-11"

✱✱ Unless otherwise shown.

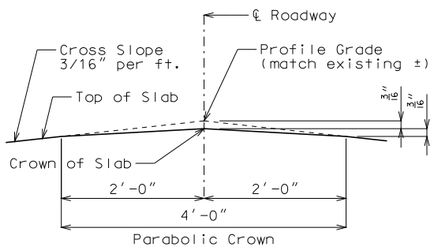

DETAIL A

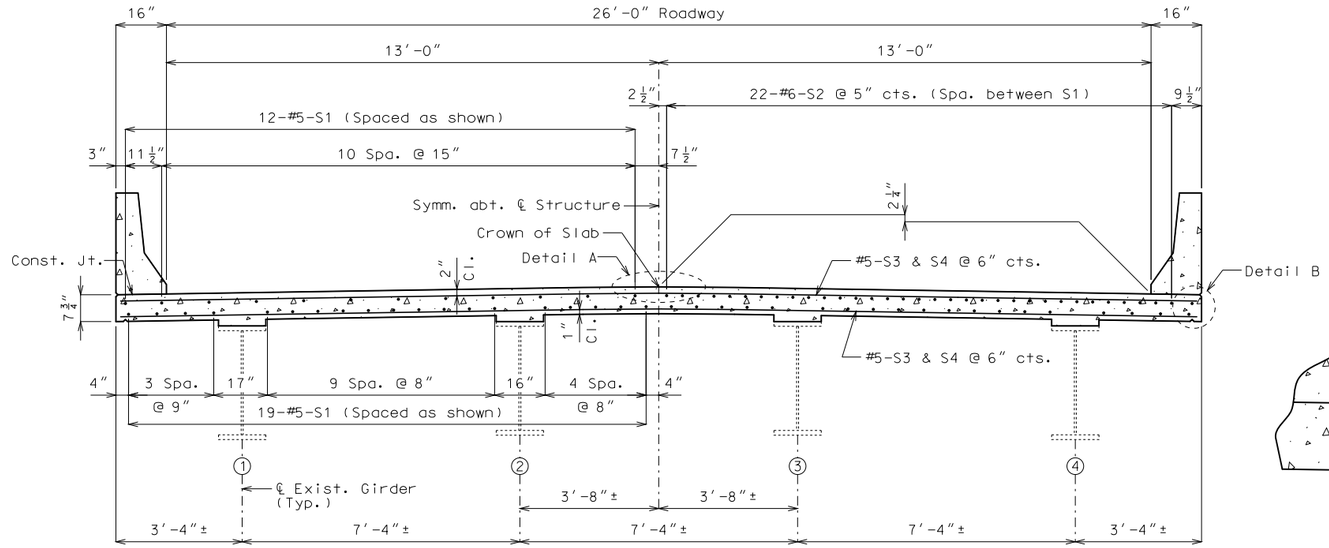

HALF SECTION NEAR MIDSPAN HALF SECTION NEAR INT. BENT

TYPICAL SECTION THRU SLAB

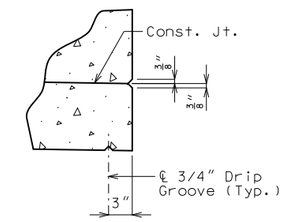

DETAIL B

General Notes:

Design Specifications:
2002 - AASHTO LFD (17th Ed.) Standard Specifications
Seismic Performance Category A

Design Loading:
H20-44 (1965) (Existing)
HS20-44 (New Construction)
35 lb/sf Future Wearing Surface

Design Unit Stresses:
Class B-1 Concrete (Safety Barrier Curb) f'c = 4,000 psi
Class B-2 Concrete (End Bents & Superstructure, except Safety Barrier Curb) f'c = 4,000 psi
Reinforcing Steel (Grade 60) fy = 60,000 psi

Joint Filler:
All joint filler shall be in accordance with Sec 1057 for preformed sponge rubber expansion and partition joint filler, except as noted.

Reinforcing Steel:
Minimum clearance to reinforcing steel shall be 1 1/2", unless otherwise shown.

Miscellaneous:
Bars bonded in old concrete not removed shall be cleanly stripped and embedded into new concrete where possible. If length is available, old bars shall extend into new concrete at least 40 diameters for smooth bars and 30 diameters for deformed bars, unless otherwise noted.

Roadway surfacing adjacent to bridge ends shall match new bridge slab surface (Roadway Item).

Outline of old work is indicated by light dashed lines. Heavy lines indicate new work.

Contractor shall verify all dimensions in field before ordering new material.

The area exposed by the removal of concrete and not covered with new concrete shall be coated with an approved qualified special mortar in accordance with Sec 704.

In order to properly form the haunches for the new deck, the contractor shall shoot deck elevations along each girder line prior to deck removal followed by shooting elvations of the tops of the girders after deck removal.

Traffic Handling:
Structure to be closed during construction.

Table Showing S2 Bar Lengths			
Int. Bent No. 2		Int. Bent No. 3	
Span 1	Span 2	Span 2	Span 3
32'-3"	32'-3"	32'-3"	32'-3"

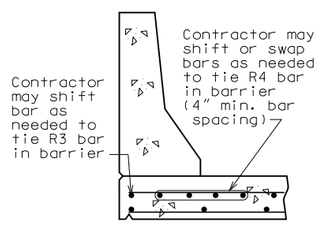

OPTIONAL SHIFTING TOP BARS AT BARRIER

Estimated Quantities		
Item		Total
Removal of Existing Bridge Decks	sq. foot	9189
Slab on Steel	sq. yard	1018
✱ Safety Barrier Curb	linear foot	638
Slab Drain	each	62
Vertical Drain at End Bents	each	2
Reinforced Concrete Pile Encasement	each	2

✱ Safety barrier curb shall be cast-in-place option or slip-form option.

Estimated Quantities for Slab on Steel		
Item		Total
Class B-2 Concrete	cu. yard	247.1
Reinforcing Steel (Epoxy Coated)	pound	93,550

The table of Estimated Quantities for Slab on Steel represents the quantities used by the State in preparing the cost estimate for concrete slabs. The area of the concrete slab will be measured to the nearest square yard longitudinally from end of slab to end of slab and transversely from out to out of bridge slab (or with the horizontal dimensions as shown on the plan of slab). Payment for stay-in-place forms, conventional forms, all concrete and coated reinforcing steel will be considered completely covered by the contract unit price for the slab. Variations may be encountered in the estimated quantities but the variations cannot be used for an adjustment in the contract unit price.

Method of forming the slab shall be in accordance with Sec 703. All hardware for forming the slab to be left in place as a permanent part of the structure shall be coated in accordance with ASTM A123 or ASTM B633 with a thickness class SC 4 and a finish type I, II or III.

Slab shall be cast-in-place with conventional forming or stay-in-place corrugated steel forms. Precast prestressed panels will not be permitted.

For optional Stay-In-Place Form Details, see Sheet No. 2.

REPAIRS TO BRIDGE:
ROUTE A OVER DRY AUGLAIZE CREEK
ROUTE A FROM RTE 54 TO RTE E
ABOUT 2.0 MILES NORTH OF RTE E
STA. 475+55.50± (Match existing)

STD. 617.10
STD. 706.35

STATE OF MISSOURI
ANOUSONE AROUNPRADITH
NUMBER PE-29317
PROFESSIONAL ENGINEER
THIS SHEET HAS BEEN SIGNED, SEALED AND DATED ELECTRONICALLY.

DATE PREPARED 8/26/2016
ROUTE A | STATE MO
DISTRICT BR | SHEET NO. 1
COUNTY CAMDEN
JOB NO. J5S3147
CONTRACT ID.
PROJECT NO.
BRIDGE NO. A20951

DATE | DESCRIPTION

MISSOURI HIGHWAYS AND TRANSPORTATION COMMISSION
105 WEST CAPITOL
JEFFERSON CITY, MO 65102
1-888-ASK-MODOT (1-888-275-6636)

IF A SEAL IS PRESENT ON THIS SHEET IT HAS BEEN ELECTRONICALLY SEALED AND DATED.

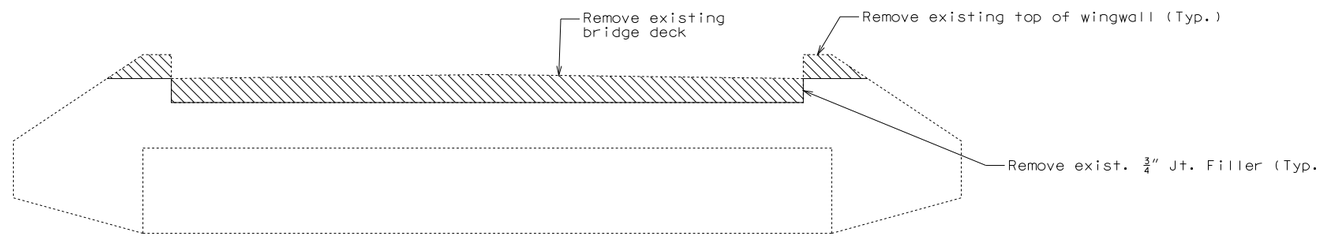

DETAILS OF CONCRETE REMOVAL AT END BENTS

The cost of concrete removal as shown will be considered completely covered by the contract unit price for Removal of Existing Bridge Decks. Vertical wingwall reinforcement shall be cut off one inch below concrete removal surface and the resulting holes shall be filled with an approved qualified special mortar.

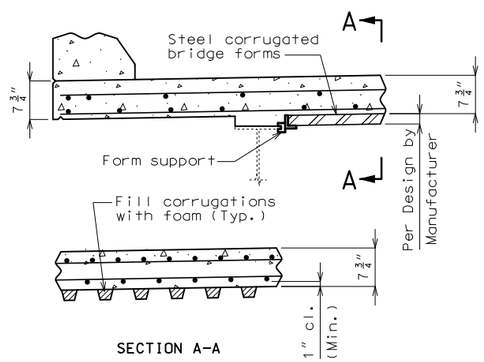

OPTIONAL STAY-IN-PLACE FORM DETAILS

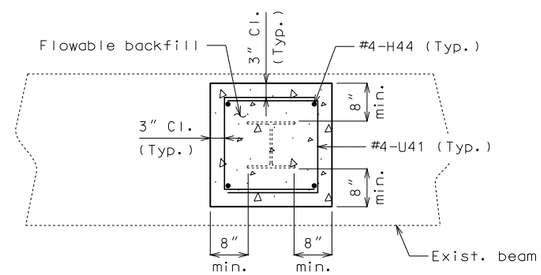

PARTIAL PLAN

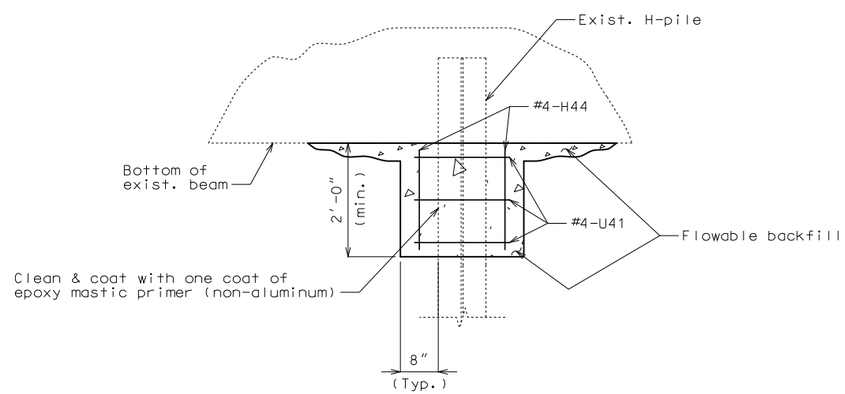

PART ELEVATION

H-PILE REPAIR DETAIL
END BENT NO. 4

Remove exist. fill under beam to repair exposed H-pile.
Use flowable backfill under beam cap after repairing H-pile.

Note:
The cost of existing fill removal, flowable fill, reinforcing rebars and cleaning & coating exposed H-pile will be considered completely covered by the contract unit price for Reinforced Concrete Pile Encasement.

General Notes:

Corrugated steel bridge deck forms, supports closure elements and accessories shall be in accordance with grade requirement and coating designation G165 of ASTM A653. Complete shop drawings of the permanent steel deck forms shall be required in accordance with Sec 1080.

Corrugations of stay-in-place forms shall be filled with an expanded polystyrene material. The polystyrene material shall be placed in the forms with an adhesive in accordance with the manufacturer's recommendations.

Form sheets shall not rest directly on the top of girders, stringers or floorbeams flanges. Sheets shall be securely fastened to form supports with a minimum bearing length of one inch on each end. Form supports shall be placed in direct contact with the flange. Welding on or drilling holes in the flanges of the girders, stringers or floorbeams will not be permitted. All steel fabrication and construction shall be in accordance with Sec's 1080 and 712. Certified field welders will not be required for welding of the form supports.

The design of stay in place corrugated steel forms is per manufacturer which shall be in accordance with Sec 703 for false work and forms. Maximum actual weight of corrugated steel forms allowed shall be 4 psf assumed for girder loading.

The contractor shall provide bracing necessary for lateral and torsional stability of the girders during construction of the concrete slab and remove the bracing after the slab has attained 75% design strength. The cost for furnishing, installing, and removing bracing will be considered completely covered by the contract unit price for Slab on Steel.

Slab shall be poured upgrade from end to end at a minimum rate of 25 cu. yd./ hr.

Alternate pour sequences may be submitted to the engineer for approval. Keyed construction joints shall be provided between pours.

Slab is to be considered at a uniform depth as shown on the plans. Haunching will vary.

Deflection Note:
The contractor shall determine dead load deflections and haunching based on field measurements and/or existing bridge plans and may be adjusted based on the difference between the new and existing dead load weights.

Detailed May 2016
Checked Jul. 2016

Note: This drawing is not to scale. Follow dimensions.

STATE OF MISSOURI
ANOUSONE AROUNPRADITH
NUMBER PE-29317
PROFESSIONAL ENGINEER
THIS SHEET HAS BEEN SIGNED, SEALED AND DATED ELECTRONICALLY.

DATE PREPARED	8/4/2016
ROUTE	A
STATE	MO
DISTRICT	BR
SHEET NO.	2
COUNTY	CAMDEN
JOB NO.	J5S3147
CONTRACT ID.	
PROJECT NO.	
BRIDGE NO.	A20951

DATE	DESCRIPTION

IF A SEAL IS PRESENT ON THIS SHEET IT HAS BEEN ELECTRONICALLY SEALED AND DATED.

MISSOURI HIGHWAYS AND TRANSPORTATION COMMISSION
105 WEST CAPITOL
JEFFERSON CITY, MO 65102
1-888-ASK-MODOT (1-888-275-6636)

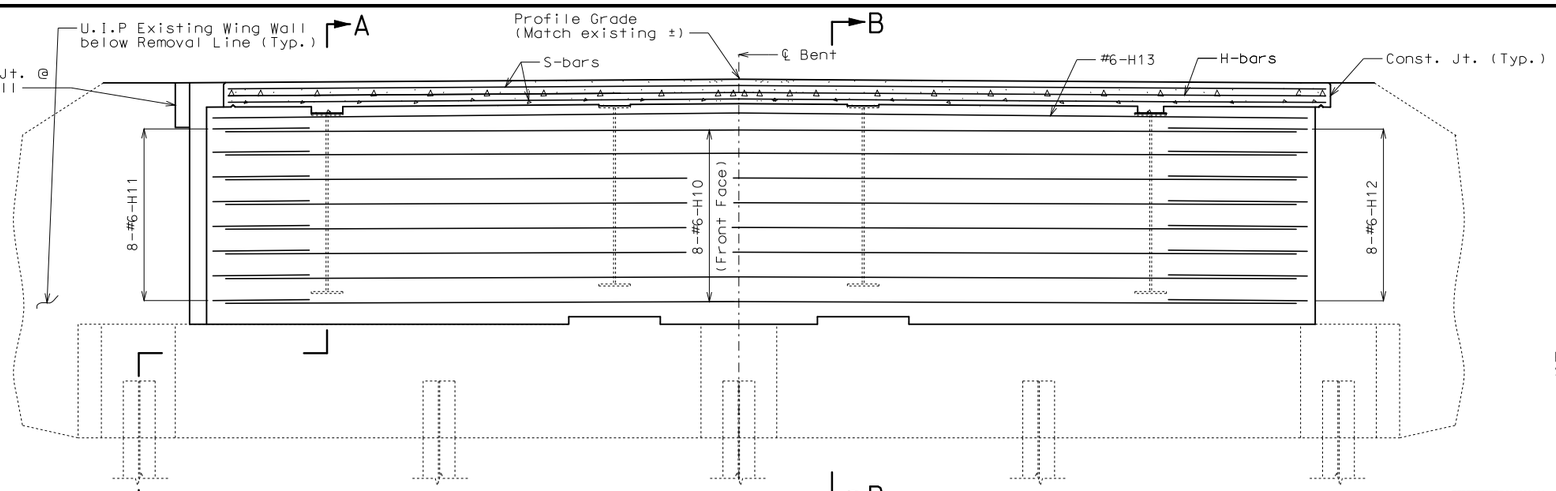

ELEVATION

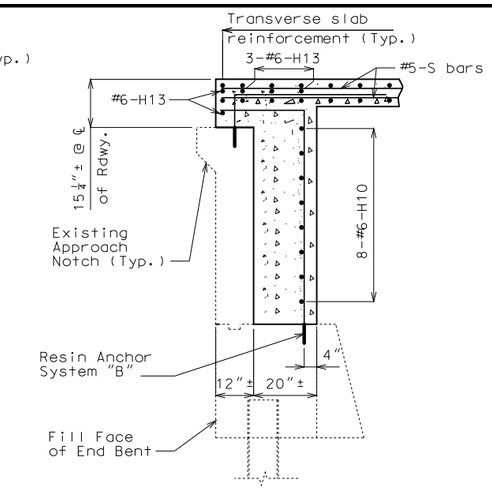

SECTION B-B

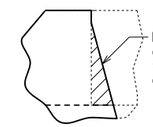

DETAIL A

Notes: Resin anchors not shown for clarity.

Existing steel end diaphragms not shown for clarity (use-in-place).

Longitudinal slab reinforcement not shown for clarity.

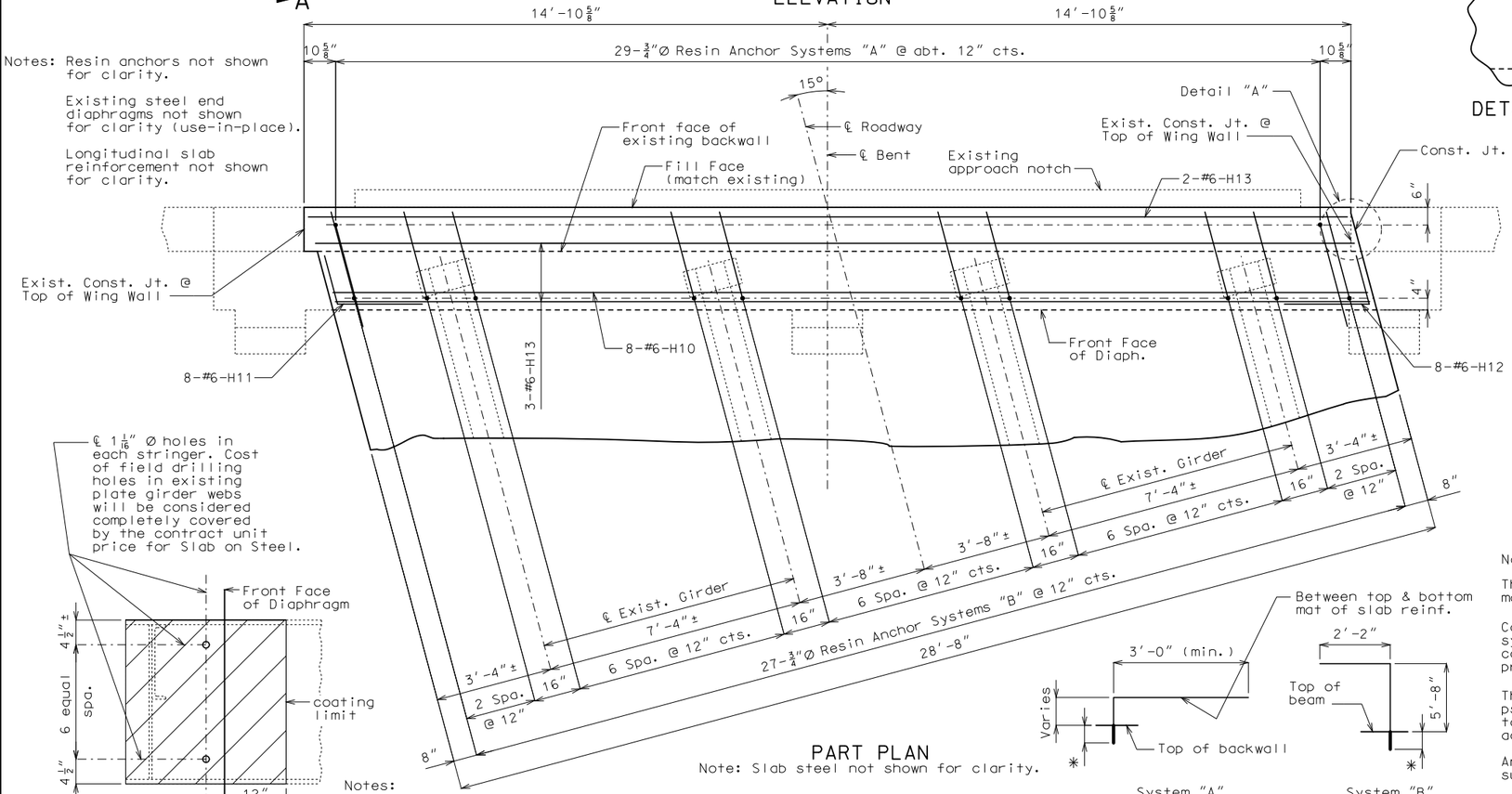

PART PLAN

Note: Slab steel not shown for clarity.

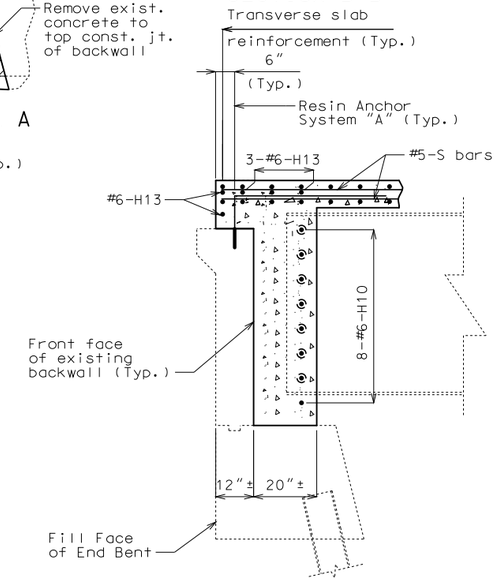

SECTION A-A

Notes:

The contractor shall use one of the qualified epoxy bonding materials in accordance with Sec 1039.

Cost of furnishing and installing the resin anchor systems shown on this sheet complete-in-place will be considered completely covered by the contract unit price for Slab on Steel.

The minimum embedment depth in concrete with f'c = 4,000 psi for the resin anchor system shall be that required to meet the minimum ultimate pullout strength in accordance with Sec 1039 but shall not be less than 5".

An epoxy coated #6 Grade 60 reinforcing bar shall be substituted for the ¾" Ø threaded rod.

All concrete and reinforcement in diaphragm is included in the Table of Estimated Quantities for Slab on Steel and will be considered completely covered by the contract unit price for Slab on Steel.

The exposed and accessible surfaces of the existing structural steel and bearings that will be encased in concrete shall be cleaned with a minimum of SSPC-SP-2 (except stringer shall be SSPC-SP-3 for the coating limit shown) surface preparation before concrete is poured. Payment for cleaning steel to be encased in concrete will be considered completely covered by the contract unit price for Slab on Steel.

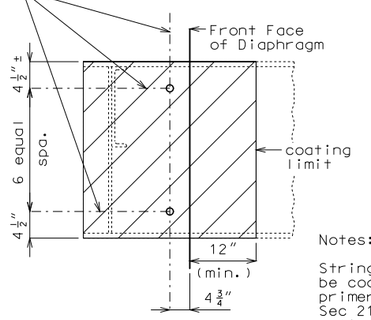

DETAIL OF WEB HOLES & COATING AT END BENTS

Notes:

Stringer surfaces in the limit shown shall be coated with one coat of epoxy mastic primer (non-aluminum) in accordance with Sec 216.50.2.2. Miscellaneous steel encased entirely by the conrete diaphragm need not be coated.

Cost of coating complete-in-place shall be considered completely covered by the contract unit price for Removal of Existing Bridge Deck.

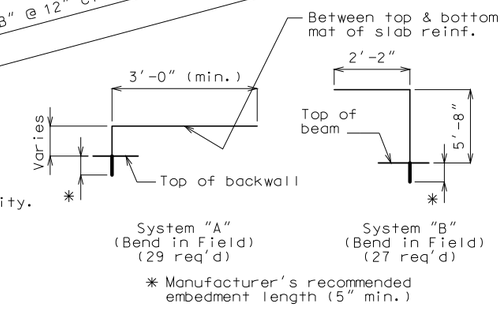

DETAILS OF EPOXY BONDING MATERIALS

DETAILS OF END BENT NO. 1

Note: This drawing is not to scale. Follow dimensions.

Sheet No. 3 of 11

Detailed Jul. 2016
Checked Jul. 2016

STATE OF MISSOURI
ANOUSONE AROUNPRADITH
NUMBER PE-29317
PROFESSIONAL ENGINEER

THIS SHEET HAS BEEN SIGNED, SEALED AND DATED ELECTRONICALLY.

DATE PREPARED	
8/4/2016	
ROUTE	STATE
A	MO
DISTRICT	SHEET NO.
BR	3
COUNTY	
CAMDEN	
JOB NO.	
J5S3147	
CONTRACT ID.	
PROJECT NO.	
BRIDGE NO.	
A20951	

DATE	DESCRIPTION

MISSOURI HIGHWAYS AND TRANSPORTATION COMMISSION
105 WEST CAPITOL
JEFFERSON CITY, MO 65102
1-888-ASK-MODOT (1-888-275-6636)

IF A SEAL IS PRESENT ON THIS SHEET IT HAS BEEN ELECTRONICALLY SEALED AND DATED.

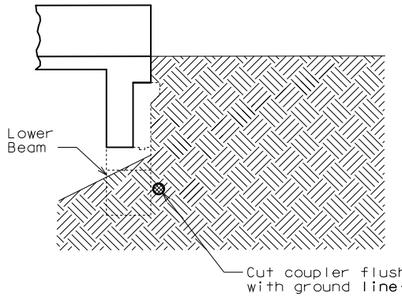

ELEVATION OF WING

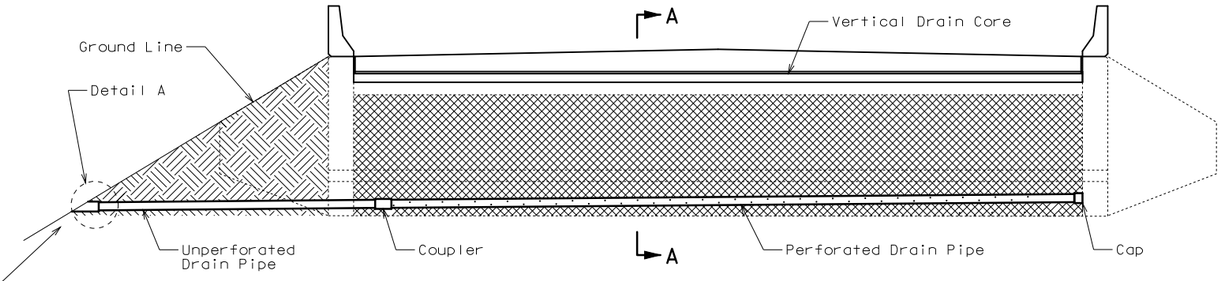

ELEVATION AT END BENT

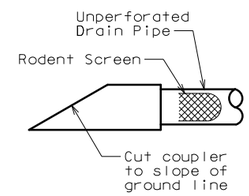

DETAIL A

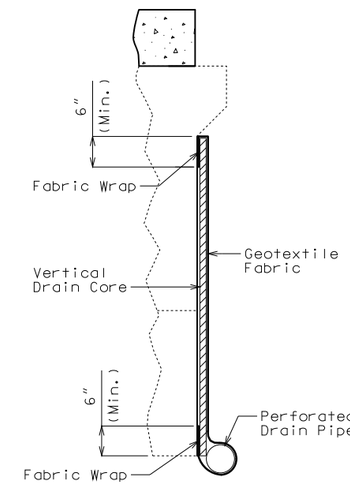

PART SECTION A-A

Note:

Drain pipe may be either 6-inch diameter corrugated metallic-coated steel pipe underdrain, 4-inch diameter corrugated polyvinyl chloride (PVC) drain pipe, or 4-inch diameter corrugated polyethylene (PE) drain pipe.

Place drain pipe at fill face of end bent and slope to lowest grade of ground line, also missing the lower beam of end bent by 1 1/2 inches. (See Elevation at End Bent.)

Perforated pipe shall be placed at fill face side at the bottom of end bent and plain pipe shall be used where the vertical drain ends to the exit at ground line.

Cost of excavation & backfill for this work, complete in place, will be completely covered by the contract unit price for Vertical Drain at End Bents.

VERTICAL DRAIN AT END BENTS

Detailed May 2016
Checked Jul. 2016

Note: This drawing is not to scale. Follow dimensions.

STATE OF MISSOURI
ANOUSONE AROUNPRADITH
NUMBER PE-29317
PROFESSIONAL ENGINEER

THIS SHEET HAS BEEN SIGNED, SEALED AND DATED ELECTRONICALLY.

DATE PREPARED	8/4/2016
ROUTE	W
STATE	MO
DISTRICT	BR
SHEET NO.	4
COUNTY	CAMDEN
JOB NO.	J5S3147
CONTRACT ID.	
PROJECT NO.	
BRIDGE NO.	A20951

DATE	DESCRIPTION

MISSOURI HIGHWAYS AND TRANSPORTATION COMMISSION
105 WEST CAPITOL
JEFFERSON CITY, MO 65102
1-888-ASK-MODOT (1-888-275-6636)

IF A SEAL IS PRESENT ON THIS SHEET IT HAS BEEN ELECTRONICALLY SEALED AND DATED.

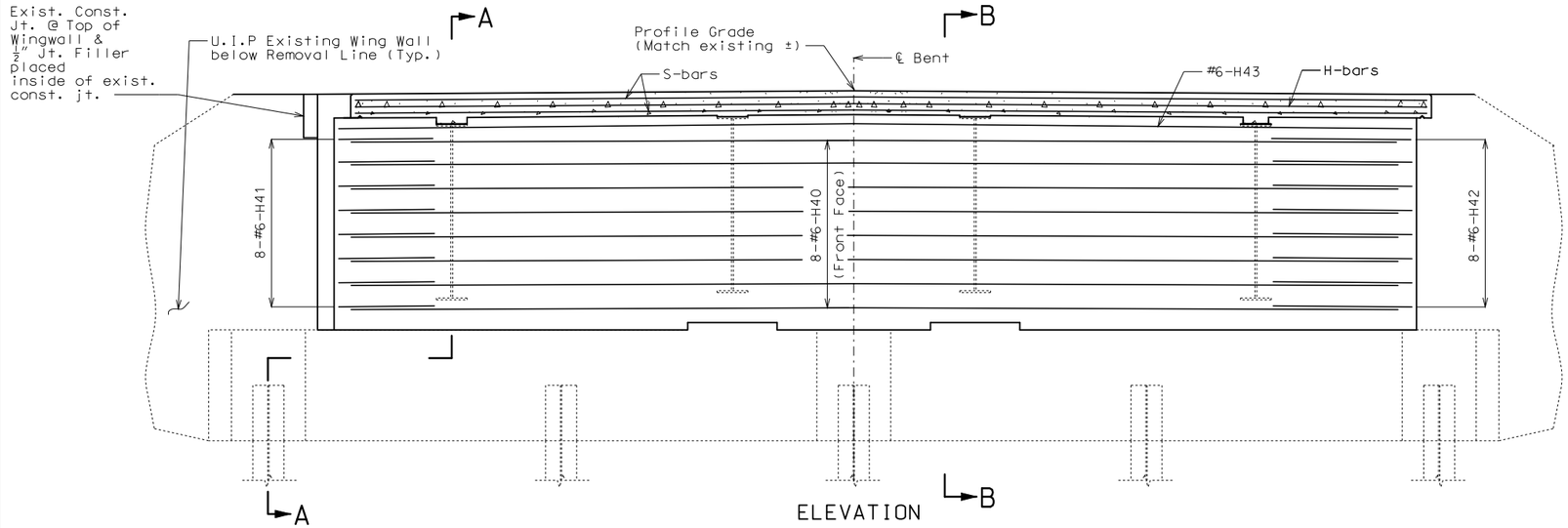

ELEVATION

Notes: Existing steel end diaphragms not shown for clarity (use-in-place).

Longitudinal slab reinforcement not shown for clarity.

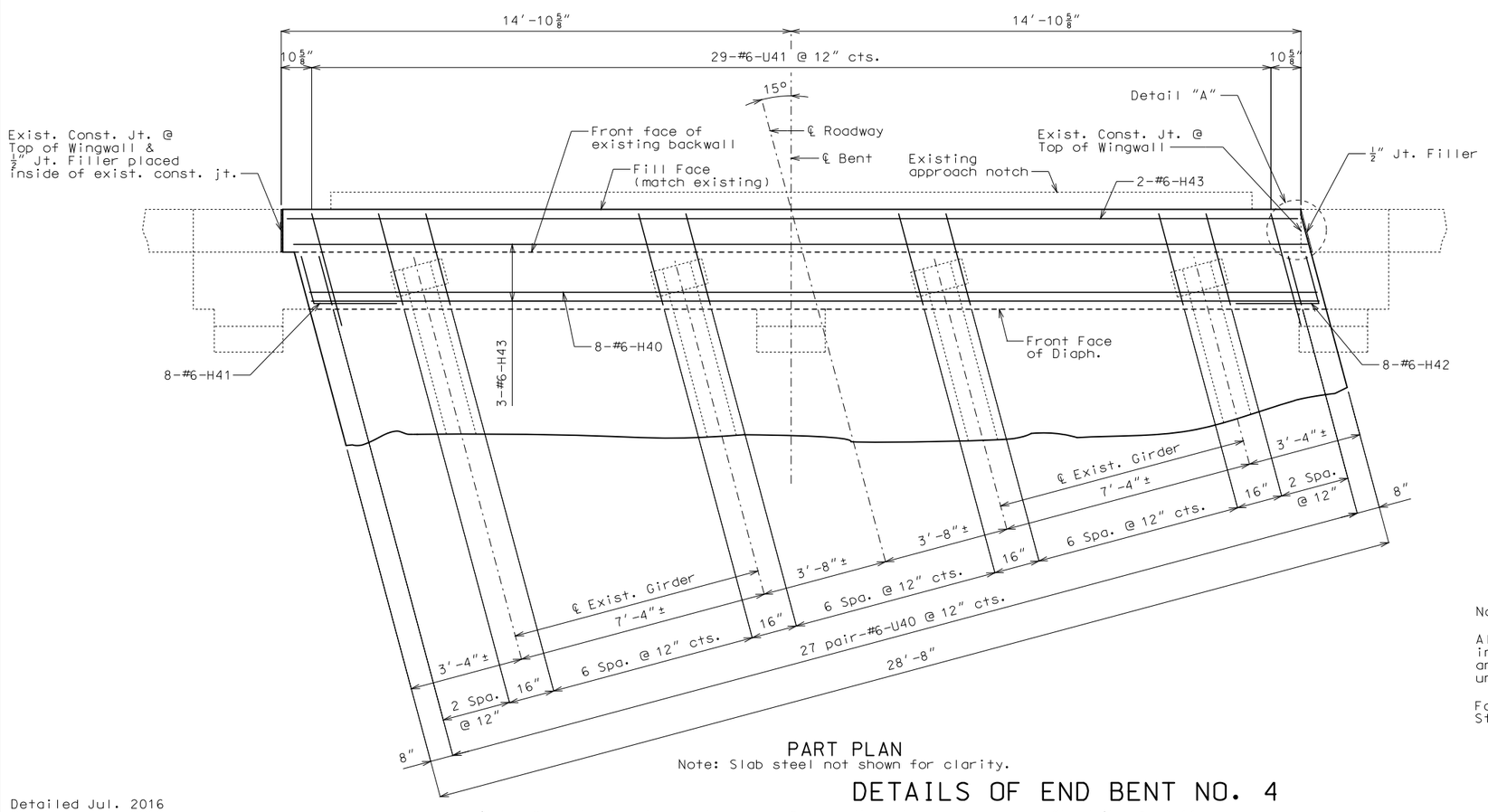

PART PLAN

Note: Slab steel not shown for clarity.

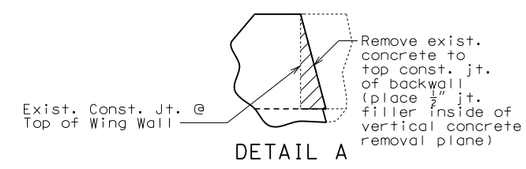

DETAIL A

Note:

Concrete removal surfaces (side and bottom) shall be made smooth with an approved qualified special mortar.

Notes:

All concrete and reinforcement in diaphragm is included in the Table of Estimated Quantities for Slab on Steel and will be considered completely covered by the contract unit price for Slab on Steel.

For Section A-A & B-B, Details of Joint Filler at Beam Steps, and Detail of Web Holes at End Bent, See Sheet No. 6.

DETAILS OF END BENT NO. 4

Detailed Jul. 2016
Checked Jul. 2016

Note: This drawing is not to scale. Follow dimensions.

STATE OF MISSOURI
ANOUSONE AROUNPRADITH
NUMBER PE-29317
PROFESSIONAL ENGINEER

THIS SHEET HAS BEEN SIGNED, SEALED AND DATED ELECTRONICALLY.

DATE PREPARED	
8/4/2016	
ROUTE: A	STATE: MO
DISTRICT: BR	SHEET NO.: 5
COUNTY: CAMDEN	
JOB NO.: J5S3147	
CONTRACT ID.	
PROJECT NO.	
BRIDGE NO.: A20951	

DATE	DESCRIPTION

MISSOURI HIGHWAYS AND TRANSPORTATION COMMISSION
105 WEST CAPITOL
JEFFERSON CITY, MO 65102
1-888-ASK-MODOT (1-888-275-6636)

IF A SEAL IS PRESENT ON THIS SHEET IT HAS BEEN ELECTRONICALLY SEALED AND DATED.

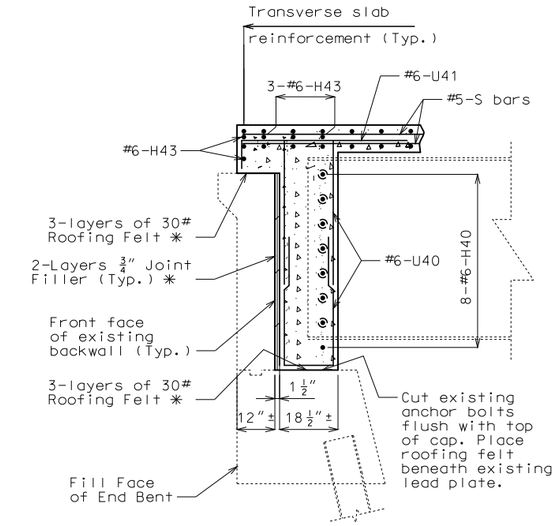

✳ Entire length of diaphragm

SECTION A-A

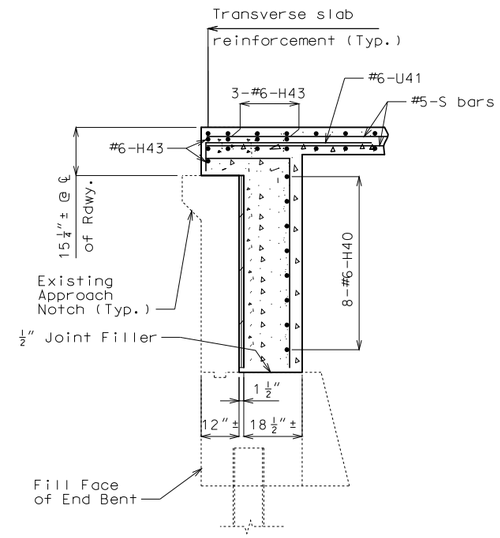

SECTION B-B

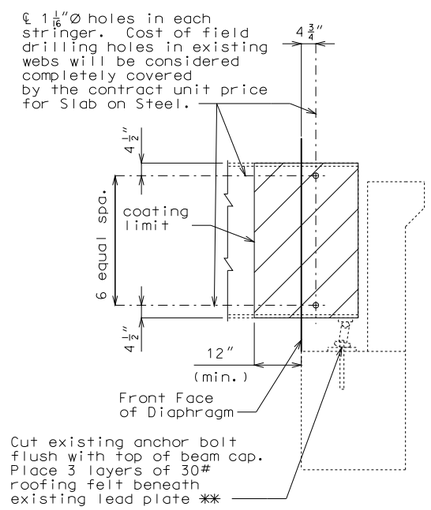

DETAIL OF WEB HOLES
& COATING
AT END BENT

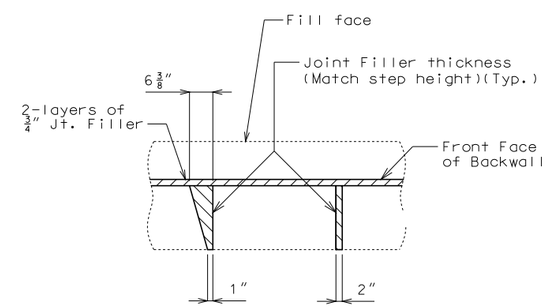

DETAILS OF JOINT FILLER
AT BEAM STEPS

Notes:

The exposed and accessible surfaces of the existing structural steel and bearings that will be encased in concrete shall be cleaned with a minimum of SSPC-SP-2 (except stringer shall be SSPC-SP-3 for the coating limit shown) surface preparation before concrete is poured. Payment for cleaning steel to be encased in concrete will be considered completely covered by the contract unit price for Slab on Steel.

Cost of cutting anchor bolts and placing roofing felt beneath bearing plates will be considred completely covered by the contract price for Slab on Steel.

Stringer surfaces in the limit shown shall be coated with one coat of epoxy mastic primer (non-aluminum) in accordance with Sec 216.50.2.2. Miscellaneous steel encased entirely by the conrete diaphragm need not be coated.

Cost of coating complete-in-place shall be considered completely covered by the contract unit price for Removal of Existing Bridge Deck.

Notes:

✳✳ These tasks and the temporay support of the girder ends while completing these tasks will be considered completely covered by the contract unit price for Slab on Steel.

Work this sheet with Sheet No. 5.

DETAILS OF END BENT NO. 4

Detailed Jul. 2016
Checked Jul. 2016

Note: This drawing is not to scale. Follow dimensions.

STATE OF MISSOURI
ANOUSONE AROUNPRADITH
NUMBER PE-29317
PROFESSIONAL ENGINEER

THIS SHEET HAS BEEN SIGNED, SEALED AND DATED ELECTRONICALLY.

DATE PREPARED	
8/4/2016	
ROUTE: A	STATE: MO
DISTRICT: BR	SHEET NO.: 6
COUNTY: CAMDEN	
JOB NO.: J5S3147	
CONTRACT ID.	
PROJECT NO.	
BRIDGE NO.: A20951	

DATE	DESCRIPTION

MISSOURI HIGHWAYS AND TRANSPORTATION COMMISSION
105 WEST CAPITOL
JEFFERSON CITY, MO 65102
1-888-ASK-MODOT (1-888-275-6636)

IF A SEAL IS PRESENT ON THIS SHEET IT HAS BEEN ELECTRONICALLY SEALED AND DATED.

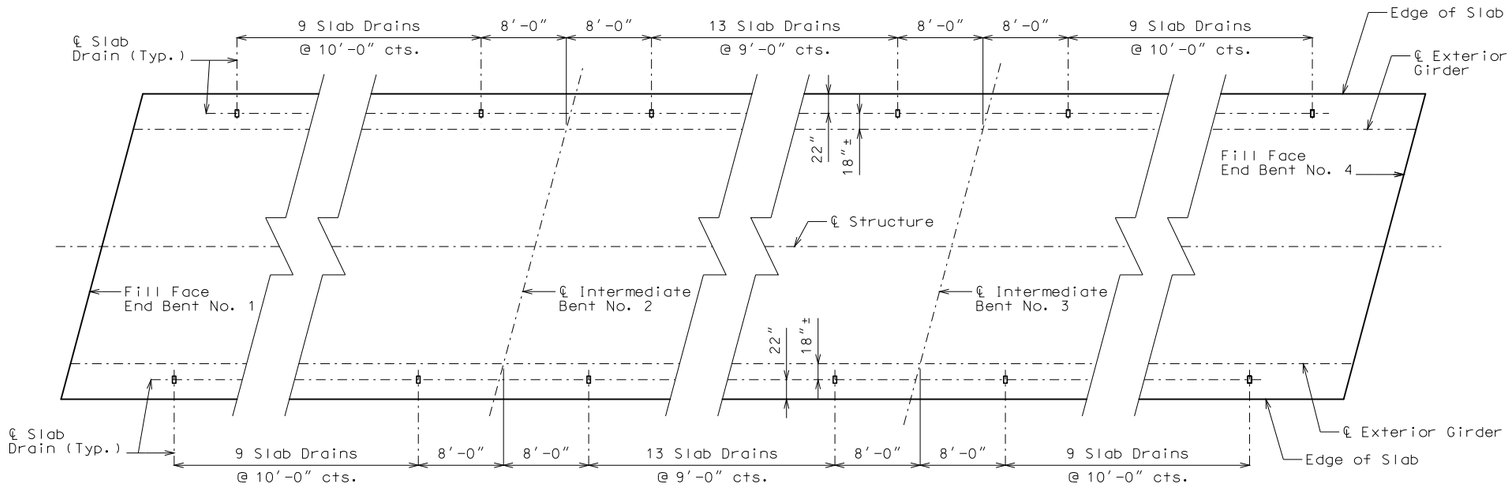

PLAN OF SLAB SHOWING SLAB DRAIN LOCATIONS

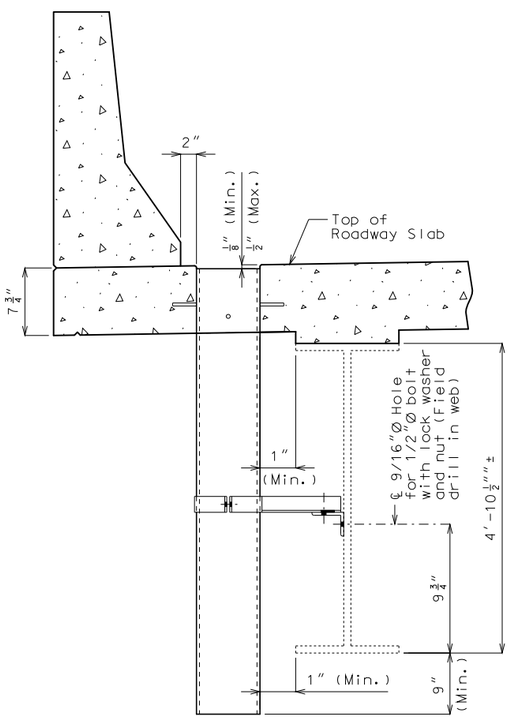

PART SECTION NEAR DRAIN

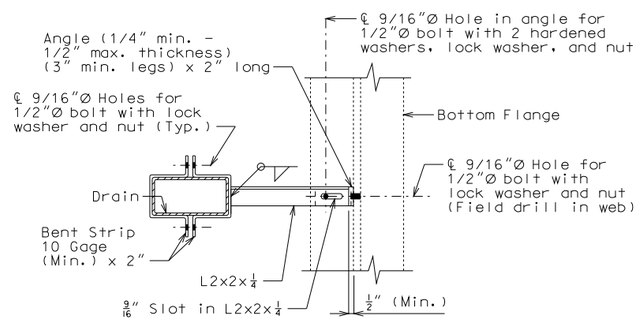

PART SECTION SHOWING BRACKET ASSEMBLY

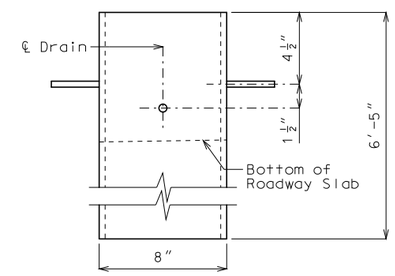

ELEVATION OF DRAIN

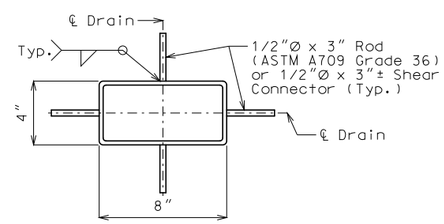

PLAN OF STEEL DRAIN

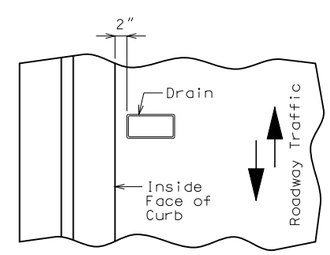

PART PLAN OF SLAB AT DRAIN

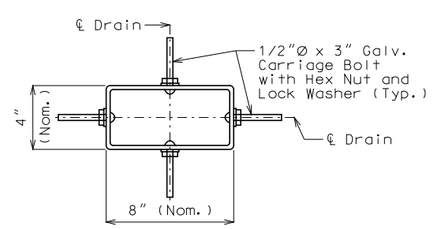

PLAN OF OPTIONAL FRP DRAIN

General Notes:

Slab drain bracket assembly shall be ASTM A709 Grade 36 steel.

Locate drains in slab by dimensions shown in Part Section Near Drain.

Reinforcing steel shall be shifted to clear drains.

The bracket assembly shall be galvanized in accordance with ASTM A123.

All bolts, hardened washers, lock washers and nuts shall be galvanized in accordance with ASTM A153.

Shop drawings will not be required for the slab drains and the bracket assembly.

The bolt hole for the bracket assembly attachment should be shifted to the minimum extent necessary to field drill in the existing web.

Notes (Steel Drain):

Slab drains may be fabricated of either 1/4" welded sheets of ASTM A709 Grade 36 steel or from 1/4" structural steel tubing ASTM A500 or A501.

Outside dimensions of drains are 8" x 4".

The drains shall be galvanized in accordance with ASTM A123.

Notes (Optional FRP Drain)

Fiberglass Reinforced Polymer (FRP) slab drains may be substituted for steel slab drains as a contractor's option.

Drains shall be machine filament-wound thermosetting resin tubing meeting the requirements of ASTM D2996 with the following exceptions:

Shape of drains shall be rectangular with outside nominal dimensions of 8" x 4".

Minimum reinforced wall thickness shall be 1/4 inch.

The resin used shall be ultraviolet (UV) resistant and/or have UV inhibitors mixed throughout. Drains may have an exterior coating for additional UV resistance.

The color of the slab drain shall be Gray (Federal Standard #26373). The color shall be uniform throughout the resin and any coating used.

The combination of materials used in the manufacture of the drains shall be tested for UV resistance in accordance with ASTM D4329 Cycle A. The representative material shall withstand at least 500 hours of testing with only minor discoloration and without any physical deterioration. The contractor shall furnish the results of the required ultraviolet testing prior to acceptance of the slab drains.

At the contractor's option, drains may be field cut. The method of cutting FRP slab drain shall be recommended by the manufacturer to ensure a smooth, chip free cut.

No additional payment will be made for this substitution.

STATE OF MISSOURI
ANOUSONE AROUNPRADITH
NUMBER PE-29317
PROFESSIONAL ENGINEER
THIS SHEET HAS BEEN SIGNED, SEALED AND DATED ELECTRONICALLY.

DATE PREPARED	
8/4/2016	
ROUTE: A	STATE: MO
DISTRICT: BR	SHEET NO.: 7
COUNTY: CAMDEN	
JOB NO.: J5S3147	
CONTRACT ID.	
PROJECT NO.	
BRIDGE NO.: A20951	

DATE	DESCRIPTION

MISSOURI HIGHWAYS AND TRANSPORTATION COMMISSION
105 WEST CAPITOL
JEFFERSON CITY, MO 65102
1-888-ASK-MODOT (1-888-275-6636)

IF A SEAL IS PRESENT ON THIS SHEET IT HAS BEEN ELECTRONICALLY SEALED AND DATED.

SLAB DRAIN DETAILS

Detailed May 2016
Checked Jul. 2016

Note: This drawing is not to scale. Follow dimensions.

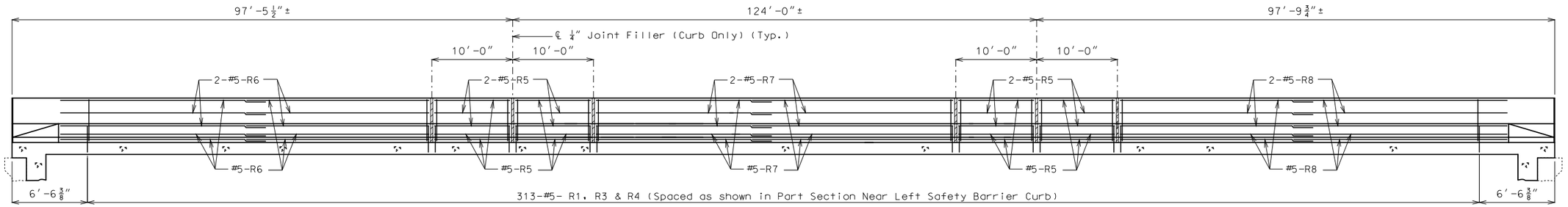

SECTION NEAR LEFT SAFETY BARRIER CURB

(Right Safety Barrier Curb similar)

Note: Longitudinal dimensions are horizontal.

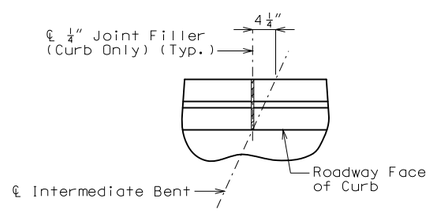

PART PLAN SHOWING SAFETY BARRIER CURB JOINT

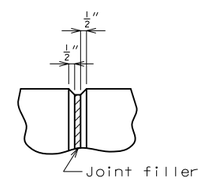

FILLED JOINT DETAIL

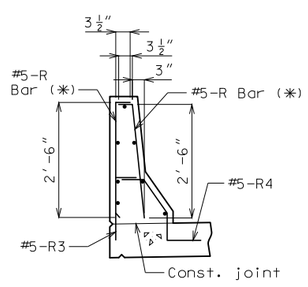

R-BAR PERMISSIBLE ALTERNATE SHAPE

(✱) The R1 bar may be separated into two bars as shown, at the contractor's option, only when slip forming is not used. (All dimensions are out to out.)

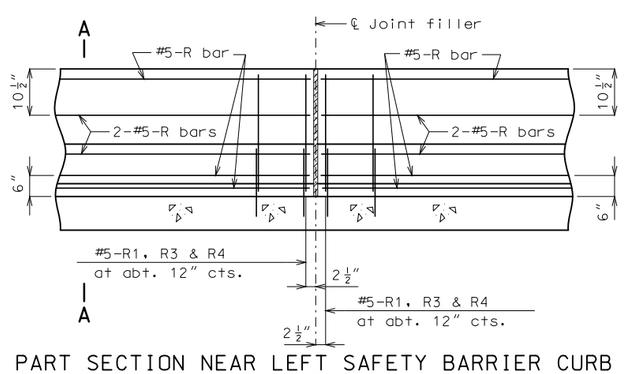

PART SECTION NEAR LEFT SAFETY BARRIER CURB (CAST-IN-PLACE CONVENTIONAL FORMING OPTION)

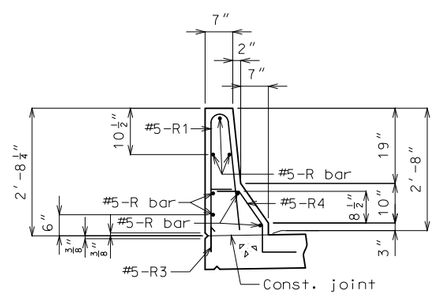

PART SECTION A-A

Notes:

Use a minimum lap of 2′-11″ for #5 horizontal safety barrier curb bars.

The cross-sectional area above the slab = 2.27 sq. ft.

Notes:

Top of safety barrier curb shall be built parallel to grade with barrier curb joints normal to grade.

All exposed edges of safety barrier curb shall have either a 1/2″ radius or a 3/8″ bevel, unless otherwise noted.

Payment for all concrete and reinforcement, complete in place, will be considered completely covered by the contract unit price for safety barrier curb per linear foot.

Concrete in the safety barrier curb shall be Class B-1.

Measurement of safety barrier curb is to the nearest linear foot for each structure, measured along the outside top of slab from end of slab to end of slab.

Concrete traffic barrier delineators shall be placed on top of the safety barrier curb as shown on Missouri Standard Plans 617.10 and in accordance with Sec 617. Delineators on bridges with two-lane, two-way traffic shall have retroreflective sheeting on both sides. Concrete traffic barrier delineators will be considered completely covered by the contract unit price for "Safety Barrier Curb".

STATE OF MISSOURI
ANOUSONE AROUNPRADITH
NUMBER PE-29317
PROFESSIONAL ENGINEER

THIS SHEET HAS BEEN SIGNED, SEALED AND DATED ELECTRONICALLY.

DATE PREPARED	
8/4/2016	
ROUTE: A	STATE: MO
DISTRICT: BR	SHEET NO.: 8
COUNTY: CAMDEN	
JOB NO.: J5S3147	
CONTRACT ID.	
PROJECT NO.	
BRIDGE NO.: A20951	

DATE	DESCRIPTION

IF A SEAL IS PRESENT ON THIS SHEET IT HAS BEEN ELECTRONICALLY SEALED AND DATED.

MISSOURI HIGHWAYS AND TRANSPORTATION COMMISSION
105 WEST CAPITOL
JEFFERSON CITY, MO 65102
1-888-ASK-MODOT (1-888-275-6636)

Detailed May 2016
Checked

Note: This drawing is not to scale. Follow dimensions.

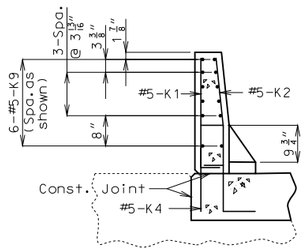

SECTION A-A

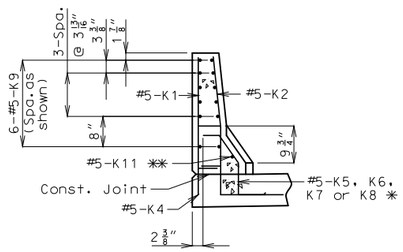

SECTION B-B

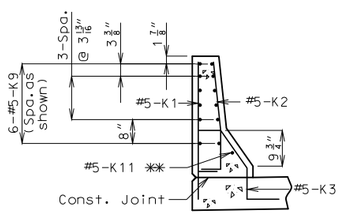

SECTION C-C

(#5-R6 Bars not shown for clarity)

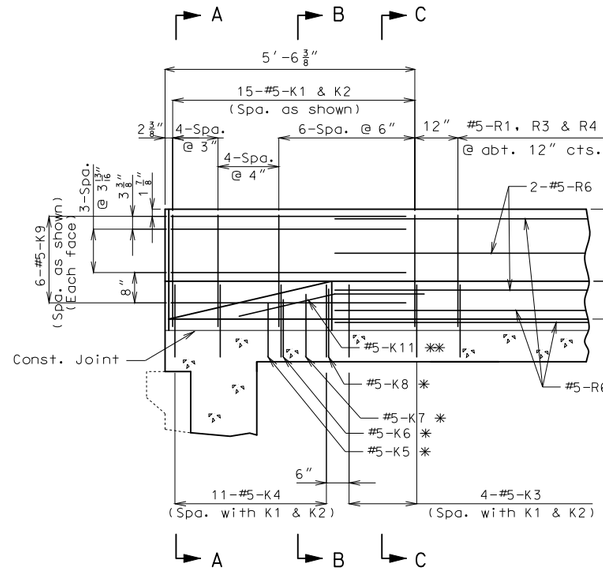

ELEVATION

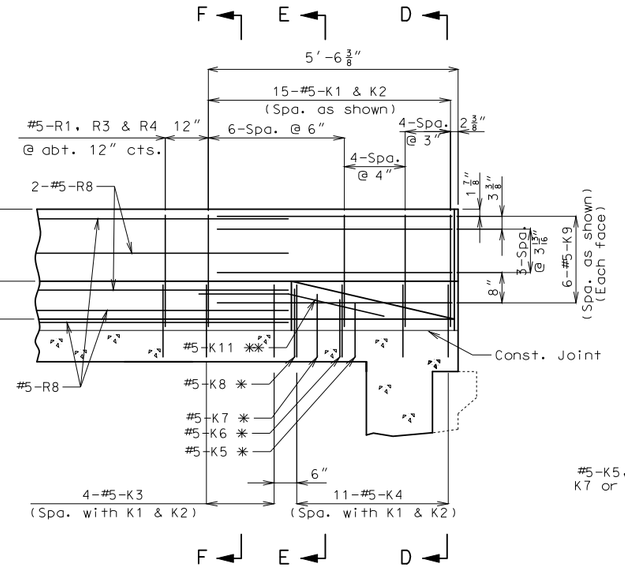

ELEVATION

✱ Spaced with #5-K4 bars with bottom leg at same elevation as the bottom leg of K4 bars.

✱✱ Fit bar to follow transition face of curb.

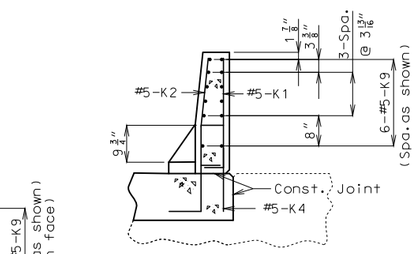

SECTION D-D

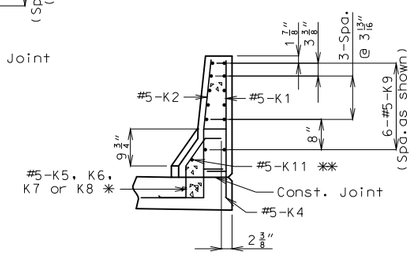

SECTION E-E

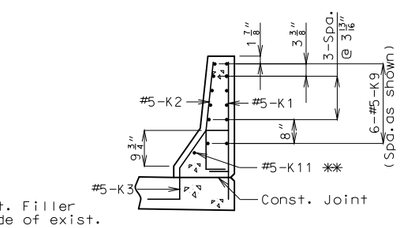

SECTION F-F

(#5-R8 Bars not shown for clarity)

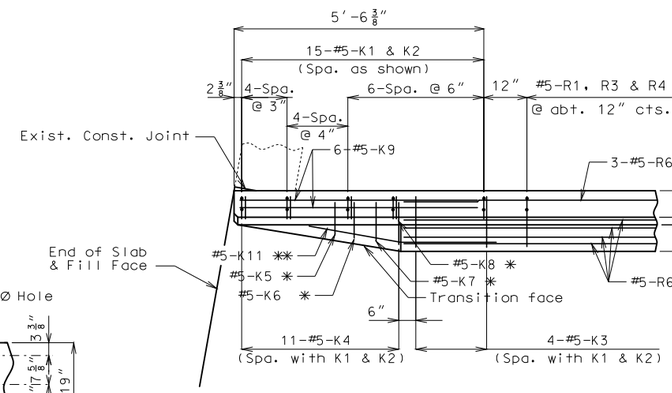

PLAN

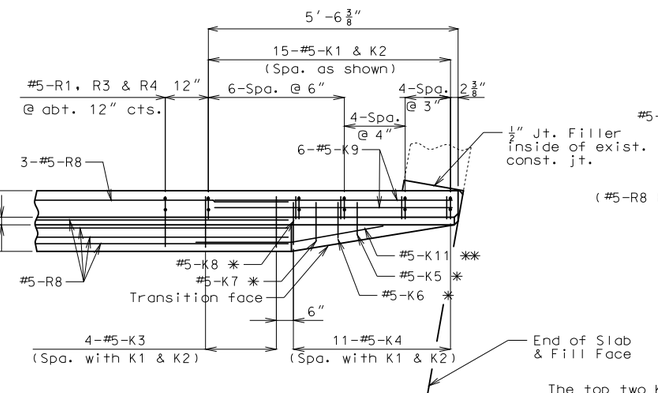

PLAN

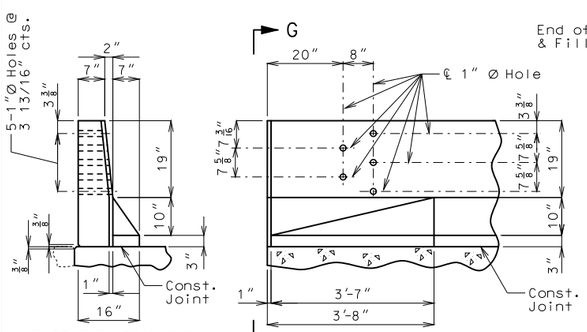

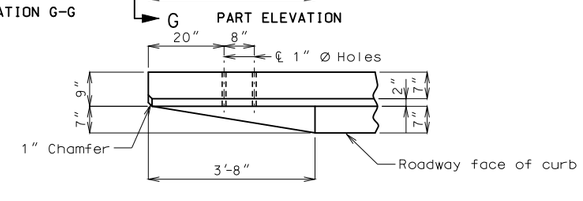

PART PLAN

DETAILS OF GUARD RAIL ATTACHMENT

The top two K9 bars shall be kept with position close to those shown in Sections A-A thru F-F

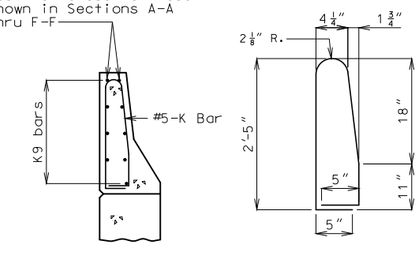

K1-K2 BAR PERMISSIBLE ALTERNATE SHAPE

(K3 or K4 thru K8 bars not shown for clarity)

The K1 and K2 bar combination may be furnished as one bar as shown, at the contractor's option.

NOTES: Use a minimum lap of 2'-11" between K9 and R6 or R8 bars.

Concrete traffic barrier delineators shall be placed on top of the safety barrier curb as shown on Missouri Standard Plans 617.10 and in accordance with Sec 617. Delineators on bridges with two-lane, two-way traffic shall have retroreflective sheeting on both sides. Concrete traffic barrier delineators will be considered completely covered by the contract unit price for Safety Barrier Curb.

DETAILS OF SAFETY BARRIER CURB AT END BENTS

(Left barrier curb shown, right barrier curb similar.)

Detailed May 2016
Checked

Note: This drawing is not to scale. Follow dimensions.

STATE OF MISSOURI
ANOUSONE AROUNPRADITH
NUMBER PE-29317
PROFESSIONAL ENGINEER

THIS SHEET HAS BEEN SIGNED, SEALED AND DATED ELECTRONICALLY.

DATE PREPARED	
8/4/2016	
ROUTE: A	STATE: MO
DISTRICT: BR	SHEET NO.: 9
COUNTY: CAMDEN	
JOB NO.: J5S3147	
CONTRACT ID.	
PROJECT NO.	
BRIDGE NO.: A20951	

DATE	DESCRIPTION

MISSOURI HIGHWAYS AND TRANSPORTATION COMMISSION
105 WEST CAPITOL
JEFFERSON CITY, MO 65102
1-888-ASK-MODOT (1-888-275-6636)

IF A SEAL IS PRESENT ON THIS SHEET IT HAS BEEN ELECTRONICALLY SEALED AND DATED.

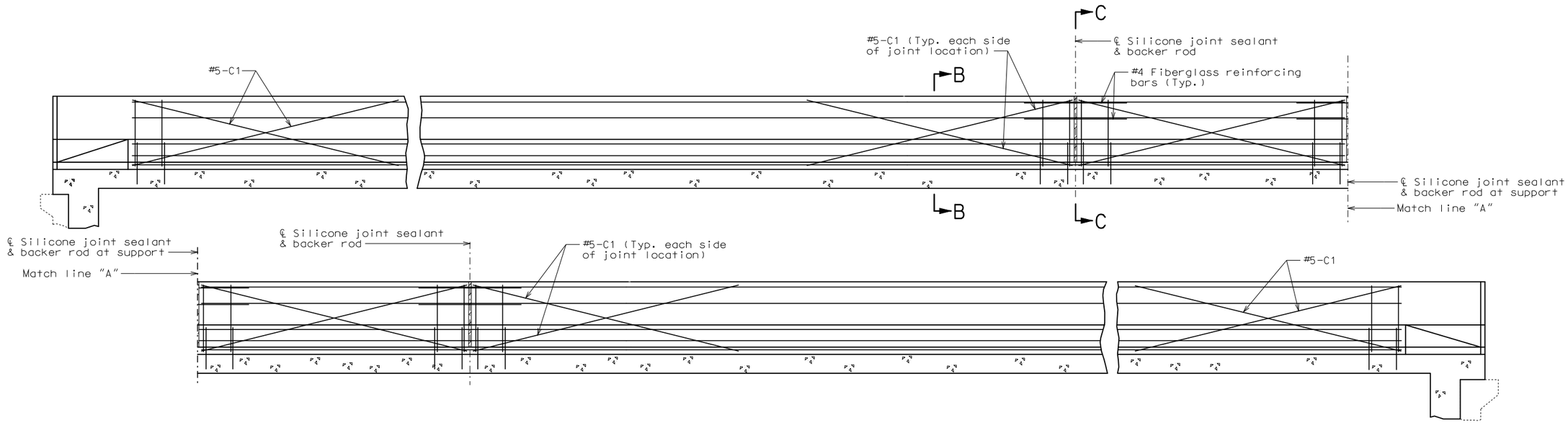

TYPICAL SECTION NEAR LEFT SAFETY BARRIER CURB AT SUPPORT LOCATIONS
(OPTIONAL SLIP-FORM BRIDGE SAFETY BARRIER CURB)

Notes:

Top of safety barrier curb shall be built parallel to grade with barrier curb joints normal to grade.

Payment for all concrete and reinforcement, complete in place, will be considered completely covered by the contract unit price for Safety Barrier Curb per linear foot.

Concrete in the safety barrier curb shall be Class B-1.

Measurement of safety barrier curb is to the nearest linear foot for each structure, measured along the outside top of slab from end of slab to end of slab.

Notes:

Joint sealant and backer rods shall be used on all slip-form barrier curbs instead of joint filler and shall be in accordance with Sec 717 for silicone joint sealant for saw cut and formed joints.

C Bars (Slip-form option only) shall be used in addition to cast-in-place conventional forming reinforcement for bridge safety barrier curb.

For Slip-Form option, all sides of the safety barrier curb shall have a vertically broomed finish and the curb top shall have a transversely broomed finish.

Concrete traffic barrier delineators shall be placed on top of the safety barrier curb as shown on Missouri Standard Plans 617.10 and in accordance with Sec 617. Concrete traffic barrier delineators will be considered completely covered by the contract unit price for Safety Barrier Curb.

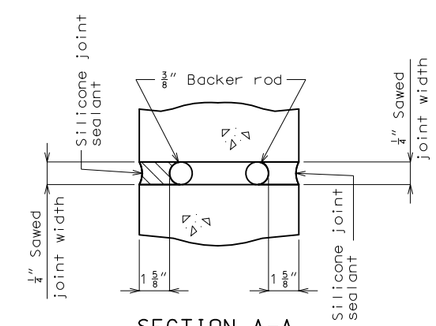

SECTION A-A

Note:

Cost of silicone joint sealant and backer rod, complete in place, will be considered completely covered by the contract unit price for Safety Barrier Curb.

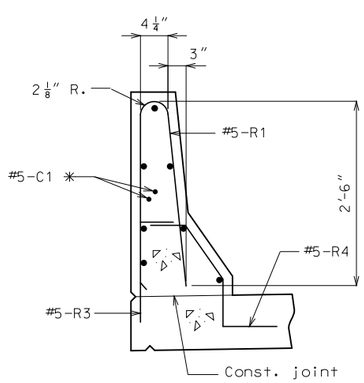

PART SECTION B-B

✳ Each side of joint location.

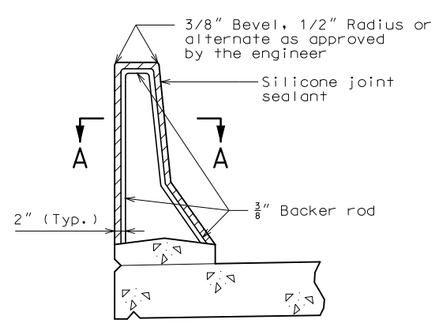

SECTION THRU JOINT

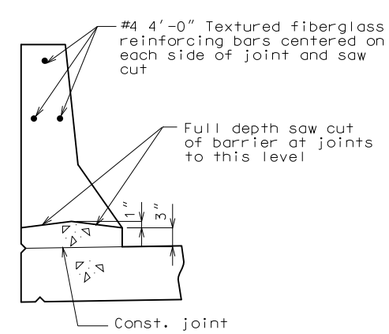

PART SECTION C-C

OPTIONAL SLIP-FORM BRIDGE SAFETY BARRIER CURB

(Left barrier curb shown, right barrier curb similar.)

Detailed May 2016
Checked

Note: This drawing is not to scale. Follow dimensions.

STATE OF MISSOURI
ANOUSONE AROUNPRADITH
NUMBER PE-29317
PROFESSIONAL ENGINEER

THIS SHEET HAS BEEN SIGNED, SEALED AND DATED ELECTRONICALLY.

DATE PREPARED	8/4/2016
ROUTE	A
STATE	MO
DISTRICT	BR
SHEET NO.	10
COUNTY	CAMDEN
JOB NO.	J5S3147
CONTRACT ID.	
PROJECT NO.	
BRIDGE NO.	A20951

DESCRIPTION	DATE

MISSOURI HIGHWAYS AND TRANSPORTATION COMMISSION
105 WEST CAPITOL
JEFFERSON CITY, MO 65102
1-888-ASK-MODOT (1-888-275-6636)

IF A SEAL IS PRESENT ON THIS SHEET IT HAS BEEN ELECTRONICALLY SEALED AND DATED.

BILL OF REINFORCING STEEL

NO. REQ'D.	MARK NO. SIZE	MARK NO. MARK	LOCATION	EPOXY (E)	SHAPE NO.	STIRRUP (S)	SUBSTR. (X)	VARIES (V)	NO. EACH	B FT.	B IN.	C FT.	C IN.	D FT.	D IN.	E FT.	E IN.	F FT.	F IN.	H FT.	H IN.	K FT.	K IN.	NOMINAL LENGTH FT.	NOMINAL LENGTH IN.	ACTUAL LENGTH FT.	ACTUAL LENGTH IN.	WEIGHT LBS.
			BENT NO. 1																									
8	6	H10	DIAPHRAGM	E	20					29	5.000													29	5	29	5	353
8	6	H11	DIAPHRAGM	E	23	S					15.000	2	5.000							14.500	3.875			3	8	3	7	43
8	6	H12	DIAPHRAGM	E	21	S					15.000	2	5.000							14.500	3.875			3	8	3	5	41
5	6	H13	DIAPHRAGM	E	20					29	7.000													29	7	29	7	222
			BENT NO. 4																									
8	6	H40	DIAPHRAGM	E	20					29	5.000													29	5	29	5	353
8	6	H41	DIAPHRAGM	E	23	S					15.000	2	5.000							14.500	3.875			3	8	3	7	43
8	6	H42	DIAPHRAGM	E	21	S					15.000	2	5.000							14.500	3.875			3	8	3	5	41
5	6	H43	DIAPHRAGM	E	20					29	7.000													29	7	29	7	222
54	6	U40	DIAPHRAGM	E	10							4	8.500	16.000										10	9	10	5	845
29	6	U41	DIAPHRAGM	E	19						9.750	3	4.625											4	2	4	1	178
			SLAB																									
744	5	S1	SLAB	E	20					56	10.000													56	10	56	10	44102
176	6	S2	SLAB	E	20					34	2.000													34	2	34	2	9032
1256	5	S3	SLAB	E	20					28	5.000													28	5	28	5	37226
56	5	S4	SLAB	E	20			V	4	26	9.000													26	9	26	9	
			INCREMENT = 22.500 INCH							2	5.000													2	5	2	5	852
			BARRIER CURB																									
60	5	K1	BARRIER CURB	E	19	S				2	5.000		5.125											2	10	2	9	172
60	5	K2	BARRIER CURB	E	14	S					5.125	11.125		18.000						2.000	17.875			2	10	2	9	172
16	5	K3	BARRIER CURB	E	27	S					16.625	5.125		12.000		7.125		12.000		9.875	6.875			4	5	4	2	70
44	5	K4	BARRIER CURB	E	10	S					12.000	16.625		6.000										4	3	4	0	184
4	5	K5	BARRIER CURB	E	27	S						4.375		6.750		7.125		12.000		5.500	4.000			2	6	2	4	10
4	5	K6	BARRIER CURB	E	27	S						4.375		7.875		7.125		12.000		6.500	4.500			2	7	2	5	10
4	5	K7	BARRIER CURB	E	27	S						4.375		9.625		7.125		12.000		7.875	5.500			2	9	2	7	11
4	5	K8	BARRIER CURB	E	27	S						4.375		11.250		7.125		12.000		9.250	6.500			2	11	2	9	11
48	5	K9	BARRIER CURB	E	20					6	7.000													6	7	6	7	330
4	5	K11	BARRIER CURB	E	8					2	2.125									2	2.000	2.375		4	4	4	4	18
626	5	R1	BARRIER CURB	E	26					2	6.000	4.250	2	6.125						2	6.000	3.000		5	2	5	2	3373
626	5	R3	BARRIER CURB	E	19	S					15.375	6.000												0	21	0	20	1088
626	5	R4	BARRIER CURB	E	27	S						6.000		11.250		6.500		12.000		9.250	6.375			3	0	2	10	1850
88	5	R5	BARRIER CURB	E	20					9	9.000													9	9	9	9	895
28	5	R6	BARRIER CURB	E	20					48	5.000													48	5	48	5	1414
28	5	R7	BARRIER CURB	E	20					53	6.000													53	6	53	6	1562
28	5	R8	BARRIER CURB	E	20					48	7.000													48	7	48	7	1419
40	5	C1	SLIP FORM	E	20					10	0.000													10	0	10	0	417
			TOTALS																									
	5			E																								95186

BILL OF REINFORCING STEEL

NO. REQ'D.	MARK NO. SIZE	MARK NO. MARK	LOCATION	EPOXY (E)	SHAPE NO.	STIRRUP (S)	SUBSTR. (X)	VARIES (V)	NO. EACH	B FT.	B IN.	C FT.	C IN.	D FT.	D IN.	E FT.	E IN.	F FT.	F IN.	H FT.	H IN.	K FT.	K IN.	NOMINAL LENGTH FT.	NOMINAL LENGTH IN.	ACTUAL LENGTH FT.	ACTUAL LENGTH IN.	WEIGHT LBS.
	6			E																								11373
			TOTAL																									0
			TOTAL	E																								106559
			Slab on Girder																									
	5			E																								82180
	6			E																								11373
			TOTAL																									93553
			Safety Barrier Curb																									
	5			E																								12589
			TOTAL																									12589
			Slip Form Option																									
	5			E																								417
			TOTAL																									417

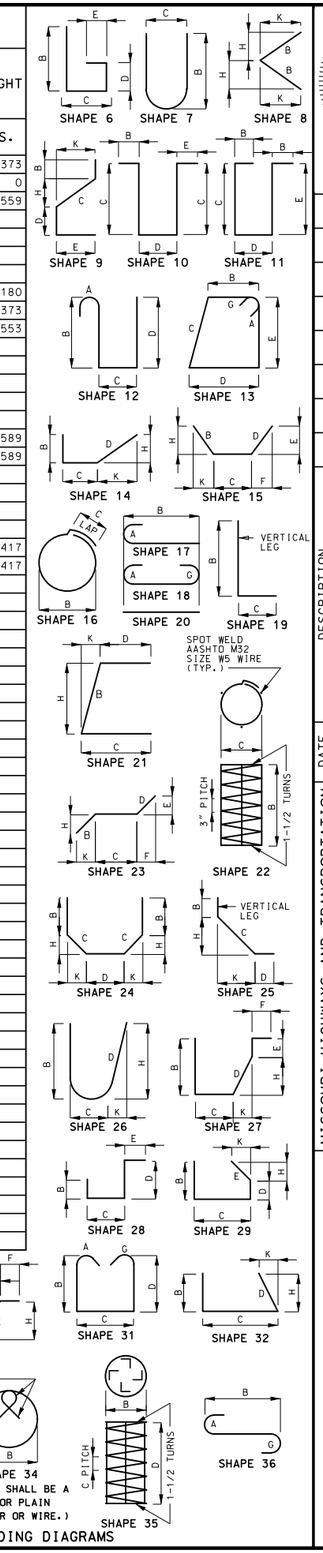

STATE OF MISSOURI
ANOUSONE AROUNPRADITH
NUMBER PE-29317
PROFESSIONAL ENGINEER

THIS SHEET HAS BEEN SIGNED, SEALED AND DATED ELECTRONICALLY.

DATE PREPARED	8/4/2016
ROUTE	A
STATE	MO
DISTRICT	BR
SHEET NO.	11
COUNTY	CAMDEN
JOB NO.	J5S3147
CONTRACT ID.	
PROJECT NO.	
BRIDGE NO.	A20951

DESCRIPTION

DATE

MISSOURI HIGHWAYS AND TRANSPORTATION COMMISSION

105 WEST CAPITOL
JEFFERSON CITY, MO 65102
1-888-ASK-MODOT (1-888-275-6636)

IF A SEAL IS PRESENT ON THIS SHEET IT HAS BEEN ELECTRONICALLY SEALED AND DATED.

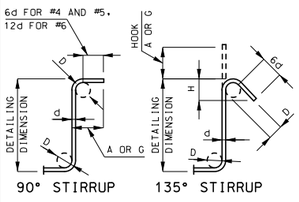

STIRRUP HOOK DIMENSIONS				
GRADES 40 - 50 - 60 KSI				
BAR SIZE	D (IN.)	90° HOOK	135° HOOK	
		HOOK A OR G	HOOK A OR G	APPROX. H
#4	2"	4 1/2"	4 1/2"	3"
#5	2 1/2"	6"	5 1/2"	3 3/4"
#6	4 1/2"	12"	8"	4 1/2"

NOTE: UNLESS OTHERWISE NOTED, DIAMETER "D" IS THE SAME FOR ALL BENDS AND HOOKS ON A BAR.

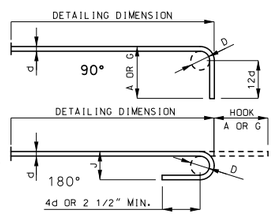

END HOOK DIMENSIONS				
BAR SIZE	D (IN.)	ALL GRADES		
		180° HOOKS		90° HOOKS
		A OR G	J	A OR G
#3	2 1/4"	5"	3"	6"
#4	3"	6"	4"	8"
#5	3 3/4"	7"	5"	10"
#6	4 1/2"	8"	6"	12"
#7	5 1/4"	10"	7"	14"
#8	6"	11"	8"	16"
#9	9 1/2"	15"	11 3/4"	19"
#10	10 3/4"	17"	13 1/4"	22"
#11	12"	19"	14 3/4"	2'-0"
#14	18 1/4"	2'-3"	21 3/4"	2'-7"

NOTE:
ALL STANDARD HOOKS AND BENDS OTHER THAN 180 DEGREE ARE TO BE BENT WITH SAME PROCEDURE AS FOR 90 DEGREE STANDARD HOOKS.
HOOKS AND BENDS SHALL BE IN ACCORDANCE WITH THE PROCEDURES AS SHOWN ON THIS SHEET.
E = EPOXY COATED REINFORCEMENT.
S = STIRRUP.
X = BAR IS INCLUDED IN SUBSTRUCTURE QUANTITIES.
V = BAR DIMENSIONS VARY IN EQUAL INCREMENTS BETWEEN DIMENSIONS SHOWN ON THIS LINE AND THE FOLLOWING LINE.
NO. EA. = NUMBER OF BARS OF EACH LENGTH.
NOMINAL LENGTHS ARE BASED ON OUT TO OUT DIMENSIONS SHOWN IN BENDING DIAGRAMS AND ARE LISTED FOR FABRICATORS USE. (NEAREST INCH)
ACTUAL LENGTHS ARE MEASURED ALONG CENTERLINE BAR TO THE NEAREST INCH.
PAYWEIGHTS ARE BASED ON ACTUAL LENGTHS.
FOUR ANGLE OR CHANNEL SPACERS ARE REQUIRED FOR EACH COLUMN SPIRAL. SPACERS ARE TO BE PLACED ON INSIDE OF SPIRALS. LENGTH AND WEIGHT OF COLUMN SPIRALS DO NOT INCLUDE SPLICES OR SPACERS.
REINFORCING STEEL (GRADE 60) FY = 60,000 PSI.

Detailed July 2016
Checked July 2016

Note: This drawing is not to scale. Follow dimensions.

MISSOURI STATE HIGHWAY DEPARTMENT

(96'-124'-96') Cont. Composite Welded PL Girder Spans

FED. ROAD DIST. NO.	STATE	FED. AID PROJ. NO.	FISCAL YEAR	SHEET NO.	TOTAL SHEETS
5	MO.		19	11	

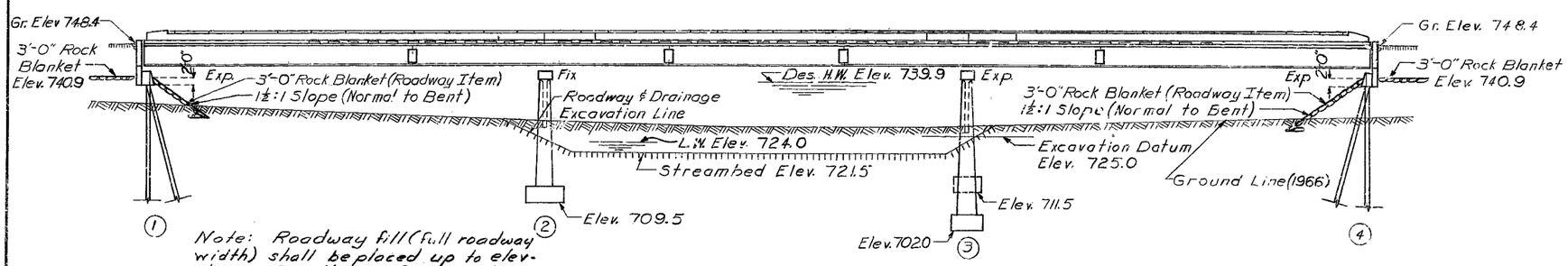

Note: Roadway fill (full roadway width) shall be placed up to elevation of bottom of concrete beam in front of and not less than 25'0" in back of End Bents before steel piles are driven for End Bents No. 1 & 4.

GENERAL ELEVATION

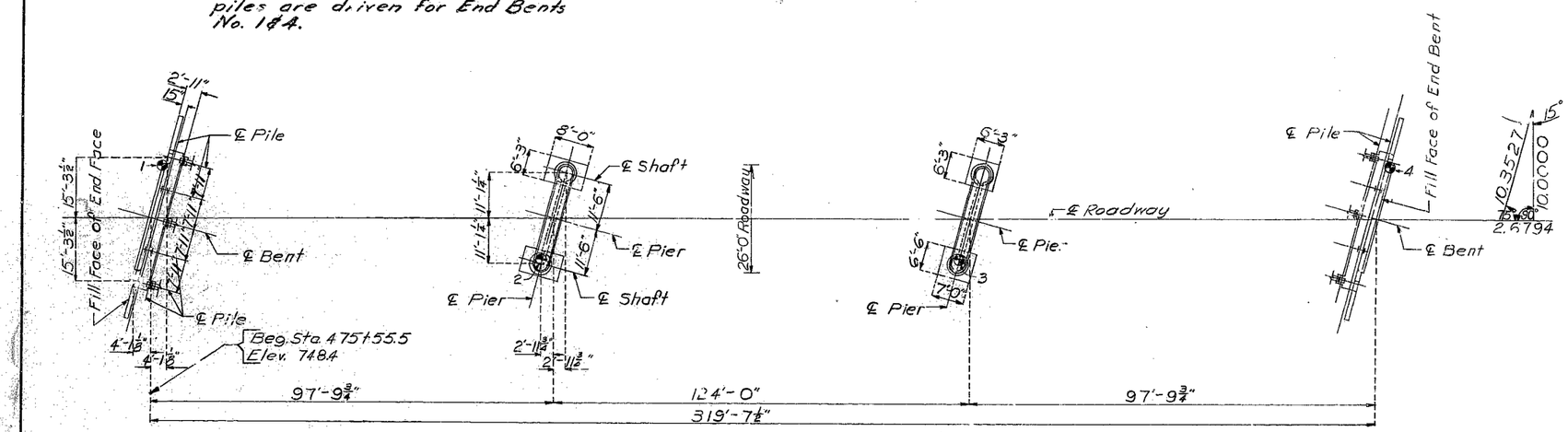

PLAN

Note: For Boring Data see sheet No. 2 of 9.
"⊗" Indicates location of boring.

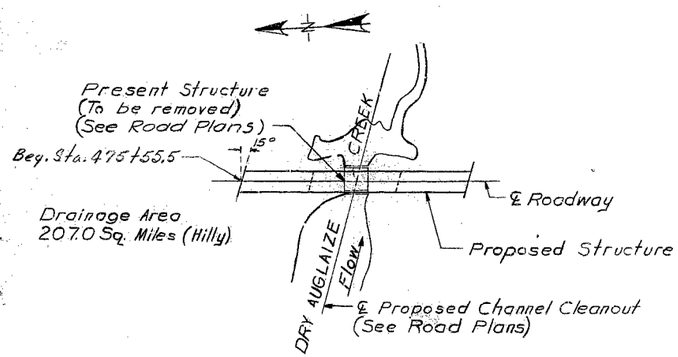

LOCATION SKETCH

GENERAL NOTES:

Design Specifications: A.A.S.H.O. - 1965

Design Loading:
H15-44 15#/sq. ft. Future Wearing Surface
Earth 120# Equivalent Fluid Pressure 30#
Fatigue Loading: AWS D2.0-66 Formula 15b & 16b

Design Unit Stresses:
Class B Concrete (substructure) fc = 1,200 psi
Class B1 Concrete (superstructure) fc = 1,600 psi
Reinforcing Steel fs = 20,000 psi
Structural Steel (A.S.T.M. A36-66) fs = 20,000 psi
Steel Pile (A.S.T.M. A36-66) fb = 9,000 psi.

Surface Seal:
Superstructure deck to be surface sealed.

Fabricated Steel:
Field connections, High Strength Bolts 3/4"φ, holes 13/16"φ except as noted.
Details of welded joints shown are for manual arc welding except as noted.

PILE & FOOTING DATA

	BENT NO.	1	2	3	4
BEARING PILE	Pile Type and Size	10 BP 42			10 BP 42
	Number	5			5
	Approximate Length Ft.	37			29
	Design Bearing Tons	44			44
	Hammer Energy req'd. Ft. Lbs.	10,800			10,800
SPREAD FOOTINGS	Foundation Material		Rock	Rock	
	Design Bearing Tons / Sq. Ft.		9.4	8.0 U.L. / 8.6 R.L.	

Minimum energy requirement of hammer based on plan length and design bearing value of piles. Increase by the factor (W+w)/2W when the weight of the ram (W) is less than the weight of the pile (w).
All pile shall be driven to practical refusal.

ESTIMATED QUANTITIES

ITEM		SUBSTR.	SUPERSTR.	TOTAL
Class 1 Excavation for structure	Cu. yd.	10		10
Class 2 Excavation for structure	Cu. yd.	230		230
Steel Piles in Place (10")	Lin. Ft.	330		330
Class B Concrete	Cu. yd.	161.9		161.9
Class B1 Concrete	Cu. yd.		252.0	252.0
Reinforcing Steel	Lbs.	14,290	65,560	79,850
Fabricated Structural Carbon Steel	Lbs.		202,110	202,110
Bridge Rail (Single tube type)	Lin. Ft.		612	612

Note: No payment for excavation will be allowed at End Bents No. 1 & 4.

B.M. Elev. 743.37 Boot Spike in Power Pole 50' Lt. Sta. 471+35 (U.S.G.S. Datum)

BRIDGE OVER DRY AUGLAIZE CREEK

STATE ROAD FROM FREEDOM SOUTHEAST TO RICHLAND
ABOUT 16.2 MILES N.W. OF RICHLAND
PROJECT NO. S-1064(2) SA STA. 475+55.5

CAMDEN COUNTY

SUBMITTED BY D. B. Gerstner BRIDGE ENGINEER DATE 4/11/67
APPROVED BY M. J. Nidec CHIEF ENGINEER DATE 4/11/67

STD. 54.00
A-2095

DESIGNED Nov. 1966 BY Morshedi
DETAILED JAN. 1967 BY KLIETHERMES
CHECKED Mar. 1967 BY Epple

Note: This drawing is not to scale. Follow dimensions.

150

MISSOURI STATE HIGHWAY DEPARTMENT

FED ROAD DIST NO.	STATE	FED AID PROJ NO.	FISCAL YEAR	SHEET NO.	TOTAL SHEETS
5	MO.		19	12	

COMPLETE BILL OF REINFORCING STEEL

NO.	SIZE	LENGTH	MARK	LOCATION
End Bent No. 1 & 4				
4	#6	29'-6"	H1	Backwall
16	#4	29'-6"	H2	"
16	#6	36'-9"	H3	Beam
4	#6	34'-9"	H4	"
8	#6	9'-3"	H5	Wings
10	#6	17'-3"	H6	"
8	#6	15'-3"	T1	Wings
8	#6	11'-0"	T2	"
72	#4	11'-0"	U1	Beam
16	#4	3'-6"	U2	"
12	#7	13'-9"	U3	"
6	#7	6'-6"	U4	"
106	#5	7'-6"	V1	Backwall
32	#5	8'-3"	V2	Wings
4	#4	9'-3"	V3	"
16	#4	11'-0"	V4	"
12	#6	2'-9"	V5	Beam
16	#2	19'-9"	W1	A.B. Wells
Int. Pier No. 2				
34	#9	4'-6"	D1	Footing
2	#6	26'-0"	H7	Cap
4	#7	23'-0"	H8	"
4	#7	8'-3"	H9	"
12	#4	22'-3"	H10	"
3	#8	23'-0"	H11	Web
34	#9	16'-9"	P1	Shaft
20	#9	13'-9"	P2	"
18	#4	12'-6"	P3	Web
13	#4	22'-9"	P4	Shaft
20	#5	7'-9"	U5	Web
24	#6	6'-6"	U6	Cap
2	#6	5'-9"	U7	"
22	#5	6'-9"	U8	"
8	#4	4'-3"	U9	"
8	#2	19'-9"	W1	A.B. Wells
Int. Pier No. 3				
10 14	#9	4'-6"	D3	Ftg. Left Shaft
11	#10	5'-0"	D4	" Right "
14	#10	4'-6"		Splice to P7
2	#6	26'-0"	H7	Cap
4	#7	23'-0"	H8	"
4	#7	8'-3"	H9	"
12	#4	22'-3"	H10	"
3	#8	23'-0"	H11	Web
14	#9	13'-6"		Splice to P2
[illegible]	[illegible]	[illegible]	[illegible]	Right " #10
10 14	#9	15'-9"	P6	Left "
11	#10	25'-6"	P7	Right "
6 14	#4	22'-6"	P8	Left "
8	#4	22'-3"	P9	Right "
18	#4	12'-0"	P10	Web
1	#4	14'-0"	P11	Rt. Shaft
20	#5	7'-9"	U5	Web
24	#6	6'-6"	U6	Cap
2	#6	5'-9"	U7	"
22	#5	6'-9"	U8	"
8	#4	4'-3"	U9	"
8	#2	19'-9"	W1	A.B. Wells

NO.	SIZE	LENGTH	MARK	LOCATION
Superstructure				
618	#5	3'-6"	C1	Curb
12	#6	33'-0"	C2	"
16	#6	32'-3"	C3	"
12	#6	33'-3"	C4	
8	#5	4'-9"	R1	End Post
4	#5	5'-6"	R2	"
4	#5	6'-3"	R3	"
4	#5	6'-9"	R4	"
4	#5	7'-0"	R5	"
8	#5	7'-3"	R6	"
594	#5	5'-3"	R7	Parapet
88	#5	4'-3"	R8	"
24	#5	28'-9"	R9	"
32	#5	12'-3"	R10	"
24	#5	33'-9"	R12	"
24	#5	29'-0"	R13	"
1238	#5	28'-6"	S1	Slab
319	#4	29'-9"	S2	"
330	#5	30'-0"	S3	"
56	#4	16'-0"	S4	"
28	#5	27'-9"	S5	"

BENDING SKETCHES & CUTTING DIAGRAMS

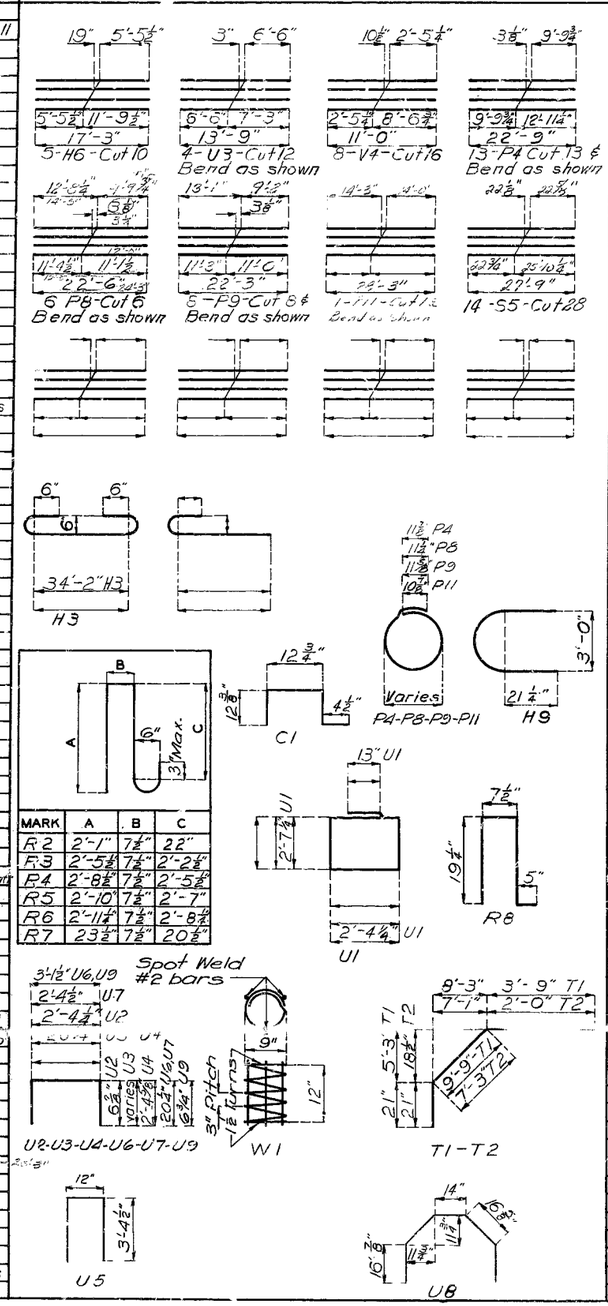

MARK	A	B	C
R2	2'-1"	7½"	22"
R3	2'-5½"	7½"	2'-2½"
R4	2'-8½"	7½"	2'-5½"
R5	2'-10"	7½"	2'-7"
R6	2'-11½"	7½"	2'-8½"
R7	23¾"	7½"	20½"

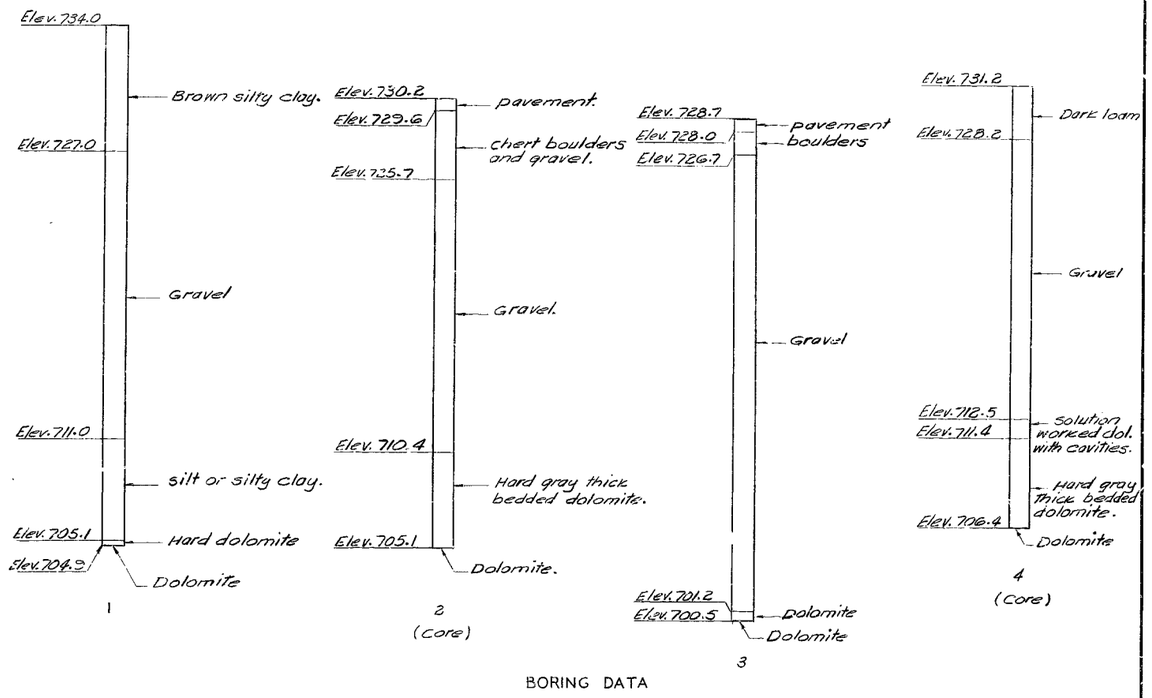

BORING DATA

BRIDGE OVER DRY AUGLAIZE CREEK

STATE ROAD FROM FREEDOM SOUTHEAST TO RICHLAND

ABOUT 16.2 MILES N.W. OF RICHLAND

PROJECT NO. S-1064 (2) 5A **STA.** 475 + 55.5

CAMDEN **COUNTY**

A-2095

No. 90.3	Revised
June 1961	Dec. 1964

DETAILED Oct. 1966 BY Morshedi – Kliethermes

CHECKED Mar 1967 BY Epple

Note: This drawing is not to scale. Follow dimensions.

Sheet No. 2 of 9.

MISSOURI STATE HIGHWAY DEPARTMENT

FED. ROAD DIST. NO.	STATE	FED. AID PROJ. NO.	FISCAL YEAR	SHEET NO.	TOTAL SHEETS
5	MO.		19	13	

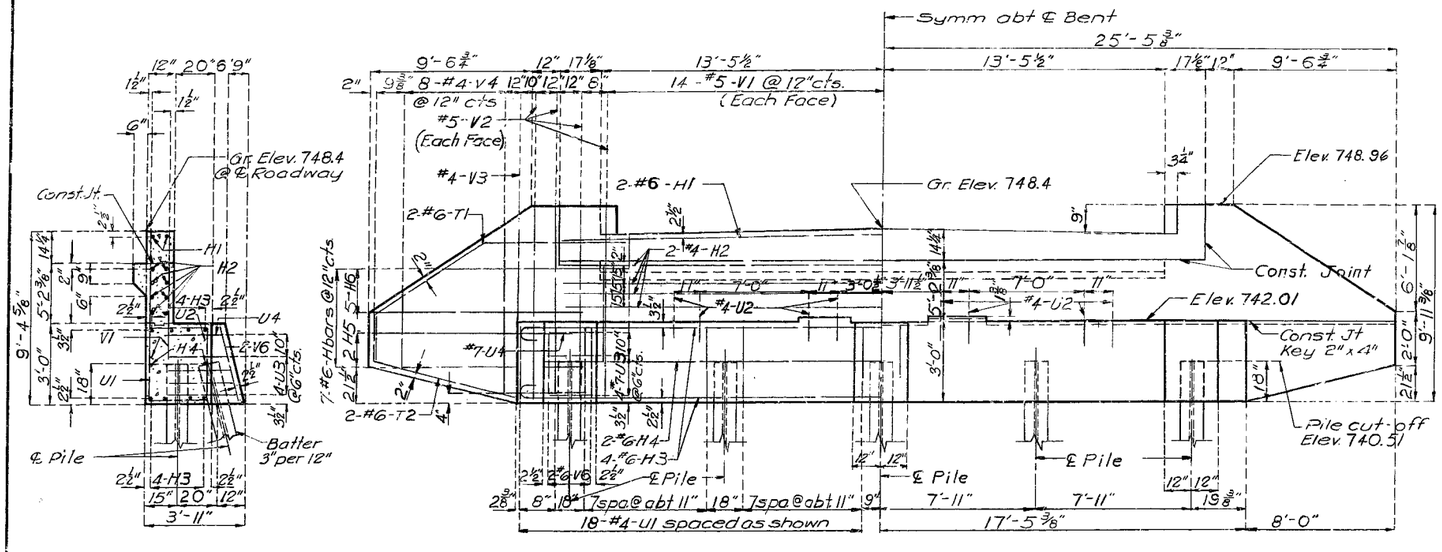

SECTION

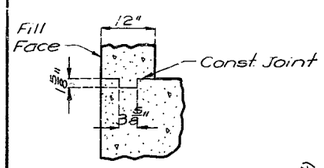

DETAIL OF KEYED CONST. JOINT

ELEVATION

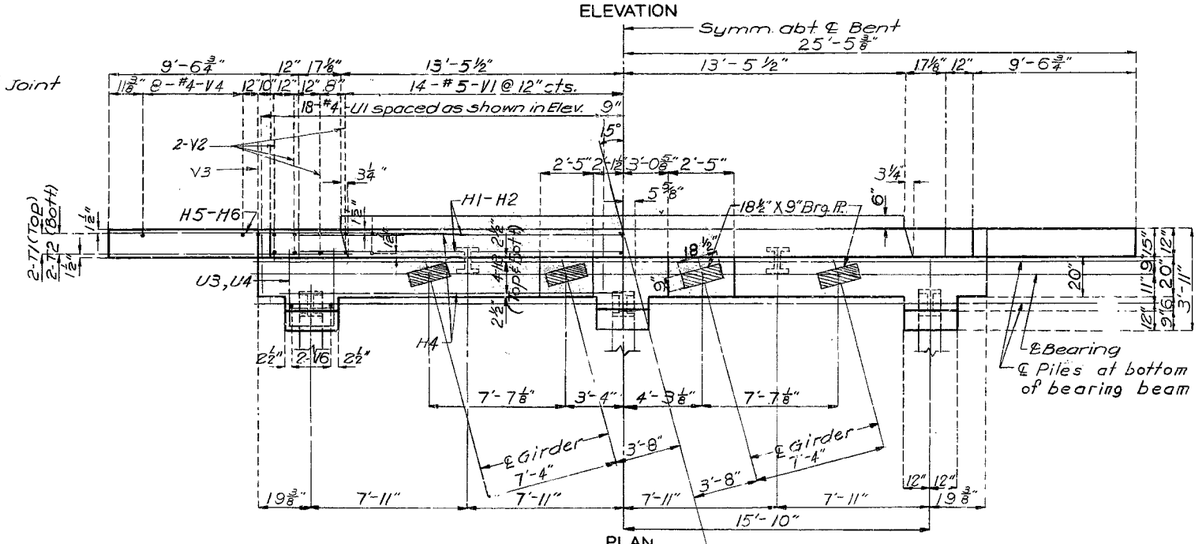

PLAN

DETAILS OF END BENTS NO. 1 & 4

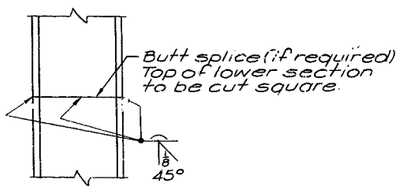

DETAIL OF STEEL PILE SPLICE

Note: Fill at end bents No. 1 & 4 shall not be carried above bottom of beam and wings until adjacent superstructure span is in place.

Top of backwall and expansion device for end bents No. 1 & 4 to conform to crown of roadway slab.

Backwall above upper construction joint shall not be poured until the structural steel of expansion device has been installed and slab has been poured in adjacent span.

BRIDGE OVER DRY AUGLAIZE CREEK

STATE ROAD FROM FREEDOM SOUTHEAST TO RICHLAND

ABOUT 16.2 MILES N.W. OF RICHLAND

PROJECT NO. S-1064(2) SA **STA.** 475+55.5

CAMDEN **COUNTY**

No.	Revised
8.1	July 1965

DETAILED DEC. 1966 BY KLIETHERMES

CHECKED Mar 1967 BY Epple

Note: This drawing is not to scale. Follow dimensions.

Sheet No. 3 of 9.

A-2095

MISSOURI STATE HIGHWAY DEPARTMENT

FED ROAD DIST NO	STATE	FED AID PROJ NO	FISCAL YEAR	SHEET NO	TOTAL SHEETS
5	MO.		19	14	

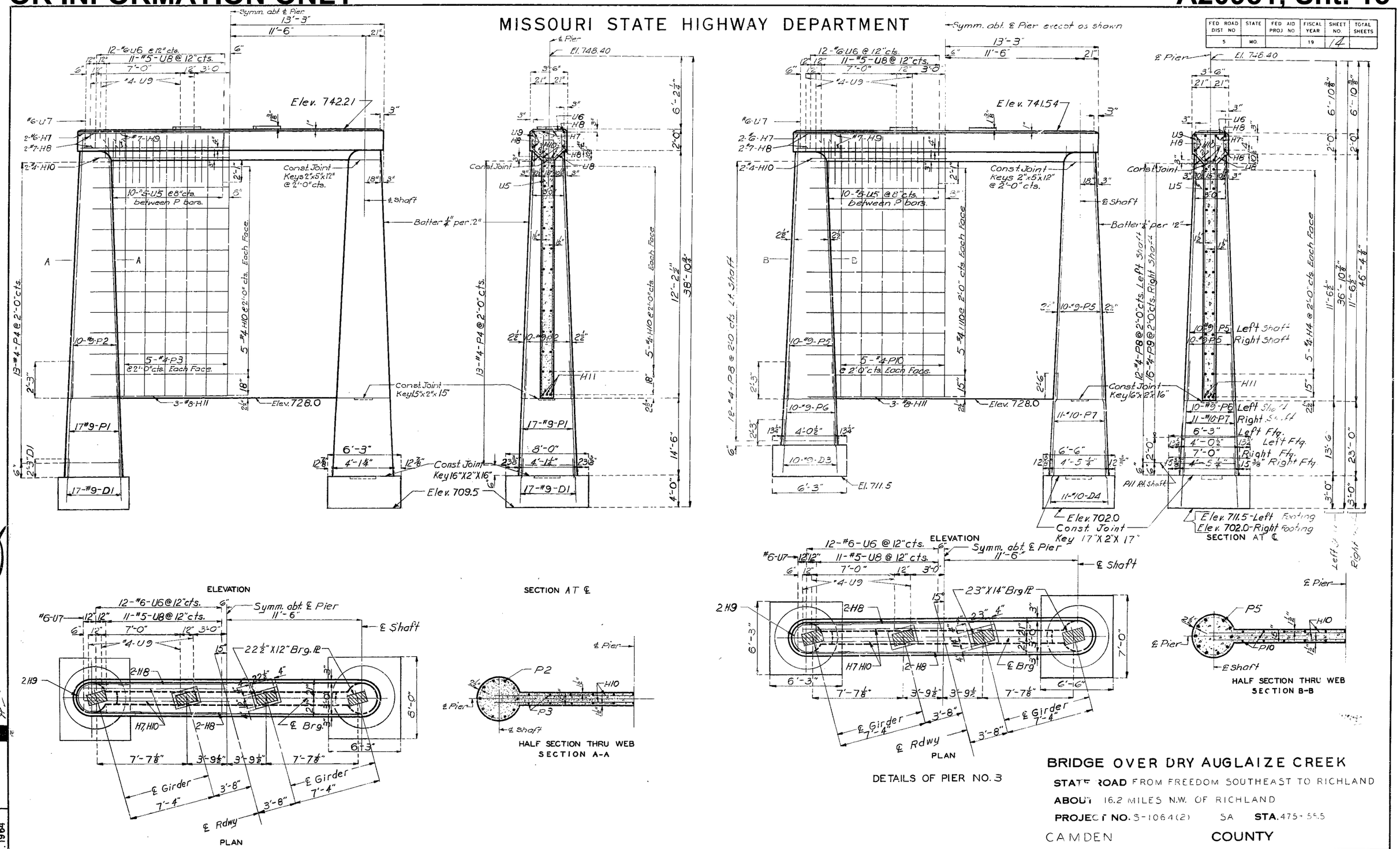

BRIDGE OVER DRY AUGLAIZE CREEK

STATE ROAD FROM FREEDOM SOUTHEAST TO RICHLAND

ABOUT 16.2 MILES N.W. OF RICHLAND

PROJECT NO. S-1064(2) SA **STA.** 475+55.5

CAMDEN **COUNTY**

DETAILED DEC 1966 BY KLIETHERMES-R'ks

CHECKED Mar. 1967 BY E.J.K.

Note: This drawing is not to scale. Follow dimensions.

Sheet No. 4 of 9.

A-2095

STD. 20.2 MAR. 1964 REVISED

153

MISSOURI STATE HIGHWAY DEPARTMENT

FED. ROAD DIST. NO.	STATE	FED. AID PROJ. NO.	FISCAL YEAR	SHEET NO.	TOTAL SHEETS
5	MO.		19	15	

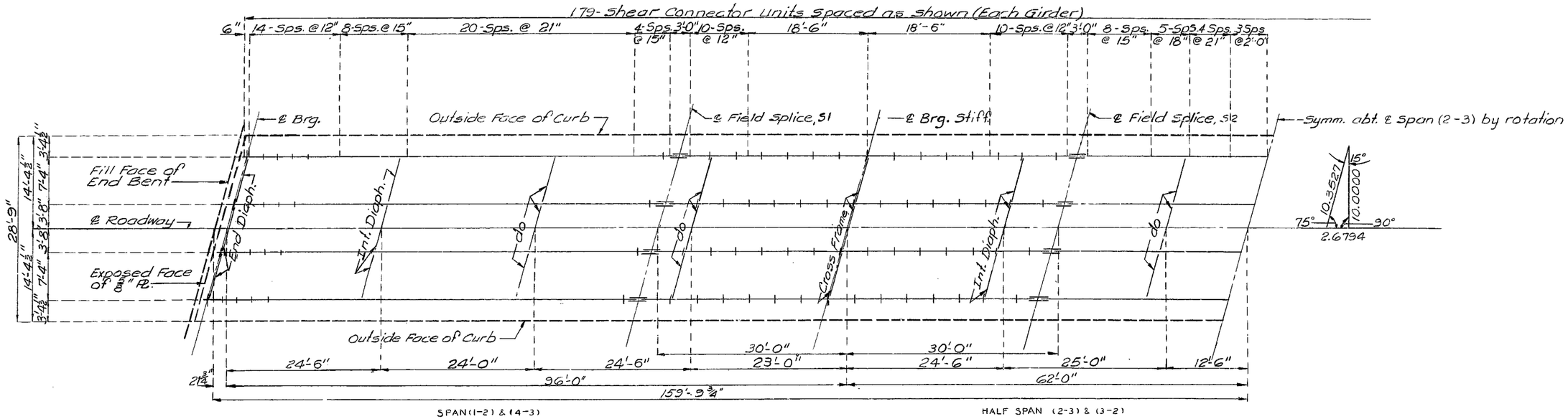

PART PLAN OF STRUCTURAL STEEL

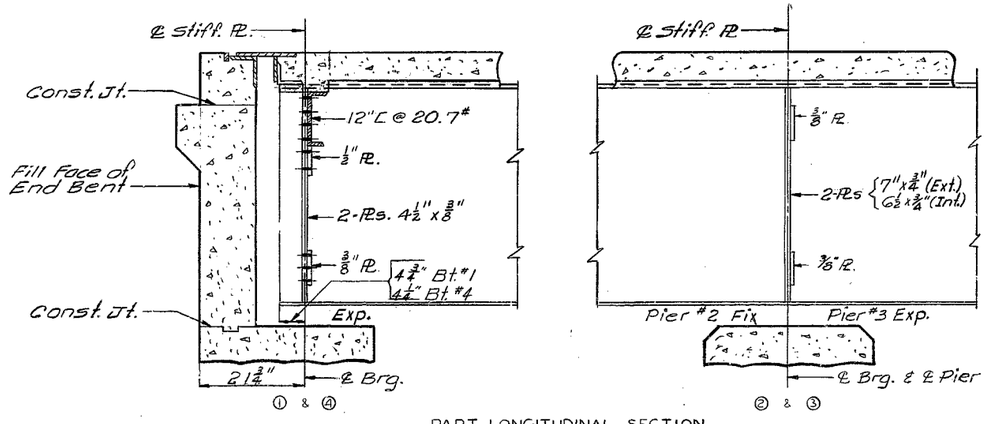

PART LONGITUDINAL SECTION

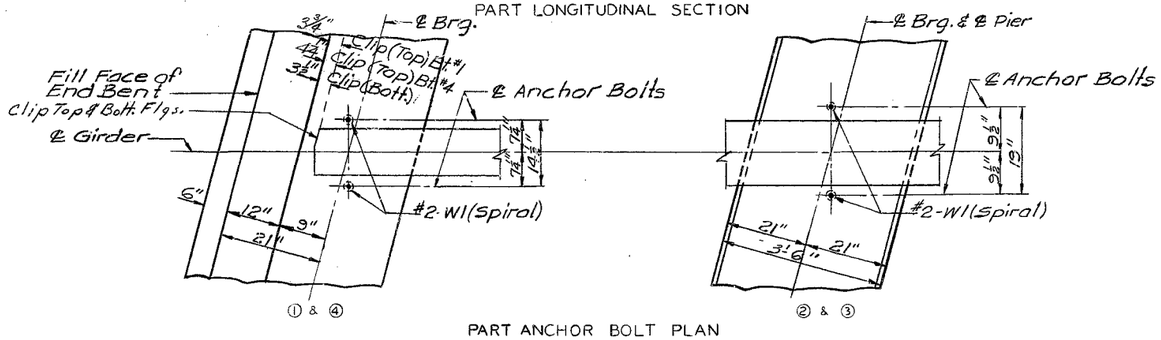

PART ANCHOR BOLT PLAN

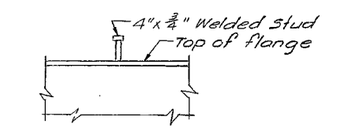

ELEVATION

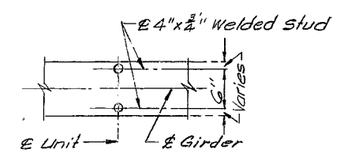

PLAN OF STUD CONN.

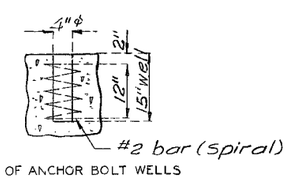

DETAIL OF ANCHOR BOLT WELLS

BRIDGE OVER DRY AUGLAIZE CREEK

STATE ROAD FROM FREEDOM SOUTHEAST TO RICHLAND

ABOUT 16.2 MILES N.W. OF RICHLAND

PROJECT NO. S-1064(2) SA **STA.** 475+55.5

CAMDEN **COUNTY**

DETAILED NOV. 1966 BY WILSON

CHECKED Mar. 1967 BY Epple

Note: This drawing is not to scale. Follow dimensions.

Sheet No. 5 of 9.

A-2095

154

MISSOURI STATE HIGHWAY DEPARTMENT

FED. ROAD DIST. NO.	STATE	FED. AID PROJ. NO.	FISCAL YEAR	SHEET NO.	TOTAL SHEETS
5	MO.		19	16	

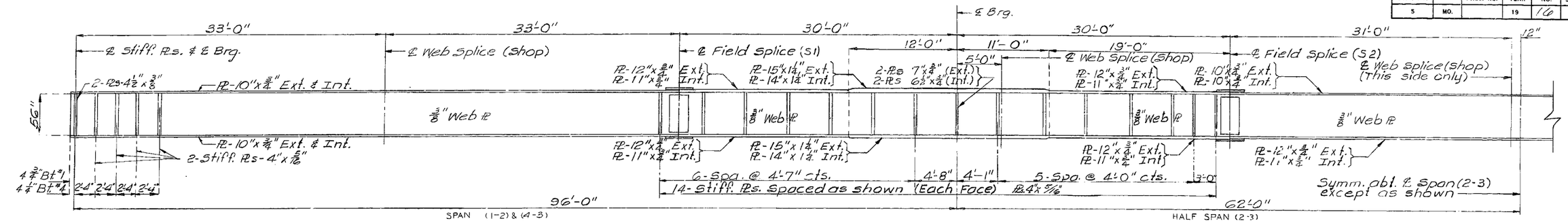

PART ELEVATION OF GIRDERS (INT. & EXT.)

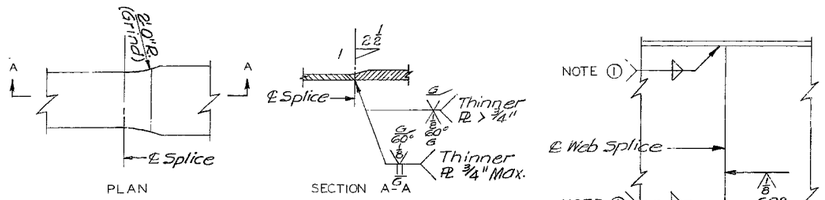

SHOP FLANGE SPLICE

SHOP WEB SPLICE

FLANGE TO WEB	
FLANGE THICKNESS	MIN. SIZE FILLET WELD
To 1/2" inclusive	3/16
Over 1/2" to 3/4"	1/4
Over 3/4" to 1 1/2"	5/16

Note ①: Fillet weld size for flange to web welds when tandem fully automatic submerged arc process is used shall be 3/16" for material to 3/4" thick, 1/4" for material over 3/4" to 7/8" thick, and in accordance with AWS recommended weld sizes for material over 7/8" thick.

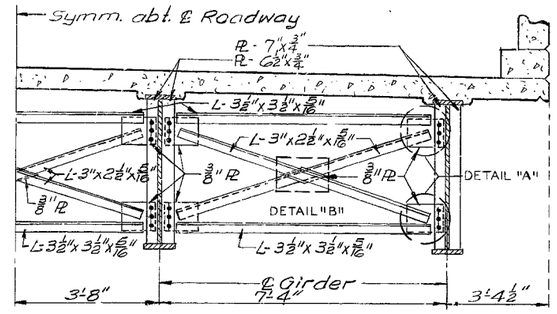

HALF SECTION SHOWING CROSS FRAMES

RADIOGRAPHIC AND MAGNETIC PARTICLE INSPECTION

Note: The following welds will be subject to radiographic inspection.

Shop: All buttwelded flange plates, and not more than 1/3 of each girder web splice beginning at a point of maximum tension.

Field: None

The following shop welds will be subject to inspection by the magnetic particle procedure:

At least 10% of each size and type of fillet welds, web to flanges and bearing stiffeners, and bearing devices.

The tests shall be located at random in the members so as to be typical for each size and type of weld.

This test procedure may also be used for examination of weld passes and miscellaneous welds not specifically set out, at the discretion of the engineer.

Field: None

The contractor may omit any shop flange splice, if desired, by extending the heavier flange plate and providing approved modifications of details at field flange splices and elsewhere as required. Paywelgh in any case will be based on material shown on design plans.

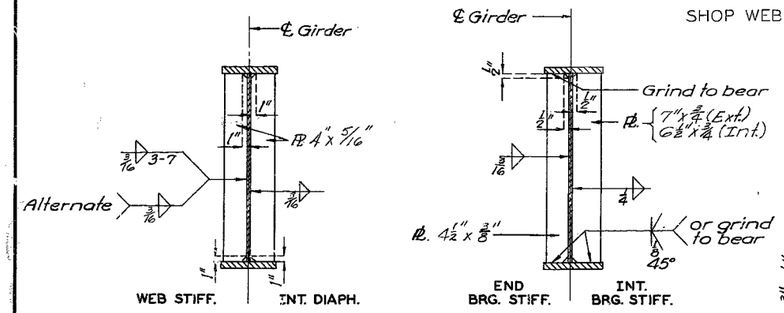

Note: Intermediate web stiffener plates shall be fitted to form a close joint (1/16") top and bottom.

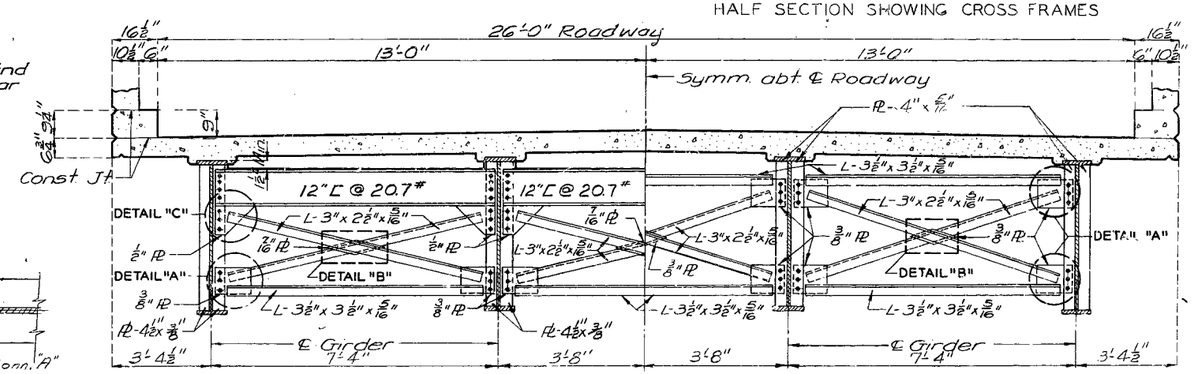

HALF SECTION SHOWING END DIAPHRAGMS

HALF SECTION SHOWING INT. DIAPHRAGMS

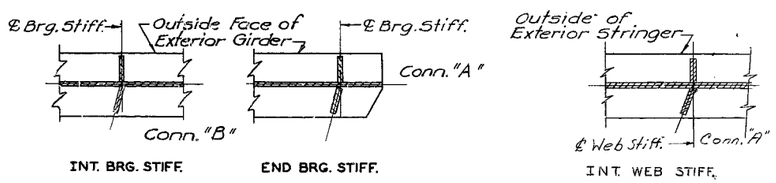

TYPICAL LOCATION DETAILS

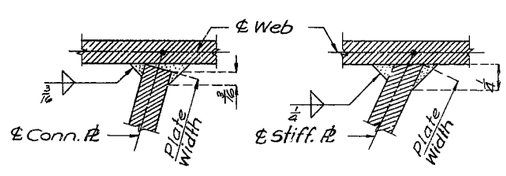

WELDING DETAILS

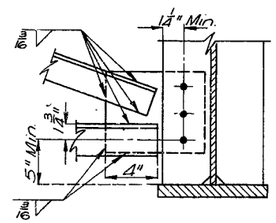

DETAIL "A"

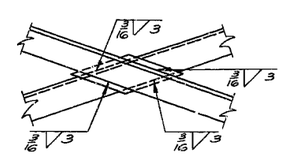

DETAIL "B"

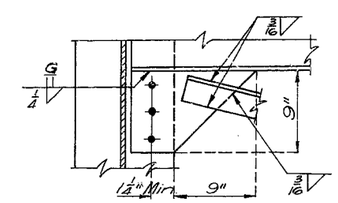

DETAIL "C"

BRIDGE OVER DRY AUGLAIZE CREEK

STATE ROAD FROM FREEDOM SOUTHEAST TO RICHLAND

ABOUT 16.2 MILES N.W. OF RICHLAND

PROJECT NO. S-1064(2) SA **STA.** 475 + 55.5

CAMDEN **COUNTY**

DETAILED NOV. 1966 BY WILSON

CHECKED Mar 1967 BY EPPLE

Note: This drawing is not to scale. Follow dimensions.

Sheet No. 6 of 9.

A-2095

155

MISSOURI STATE HIGHWAY DEPARTMENT

FED ROAD DIST. NO.	STATE	FED AID PROJ. NO.	FISCAL YEAR	SHEET NO.	TOTAL SHEETS
5	MO.		19	17	

NOTES: TYPL "D" BEARINGS

Lead plates under bearings shall be approximately 1/8" thickness and weigh 8#/sq. ft. Cost of lead plates shall be included in price bid for other items.

"Estimated weight" does not include weight of anchor bolts.

Rockers and pedestals shall be machined after welding.

Where flat surface is indicated, tolerance shall be .003 in/in in any direction.

Anchor Bolts for Type "D" Bearings shall be 1 1/4"ø swedged bolts and shall extend 12" into concrete, with hexagon nuts and plain washers for Fixed Bearings, no nuts for Expansion Bearings.

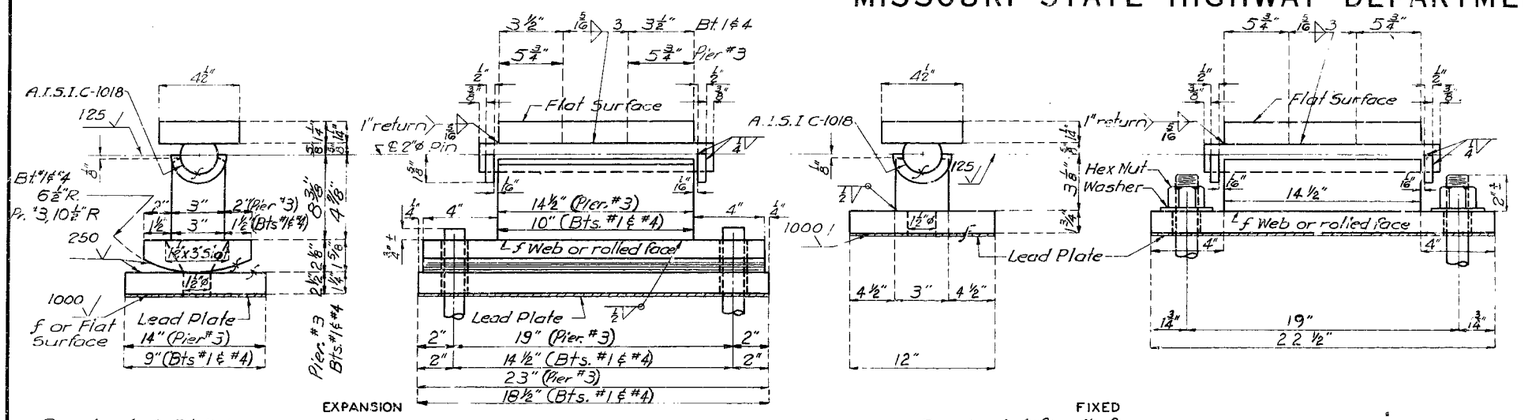

Required: 4-Bt. No. 1
4-Pier. No. 3
4-Bt. No. 4

Required: 4-Pier. No. 2

TYPE "D" BEARINGS
(Estimated Weight 3824)

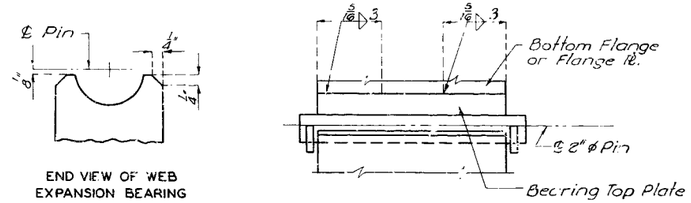

END VIEW OF WEB EXPANSION BEARING

WELDING DETAILS

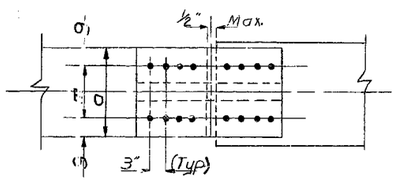

PLAN OF FLANGE

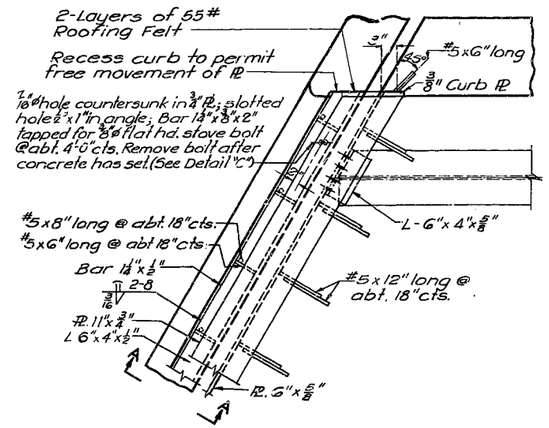

PART PLAN

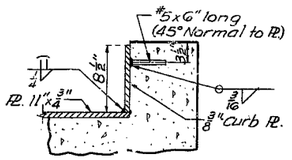

SECTION THRU CURB

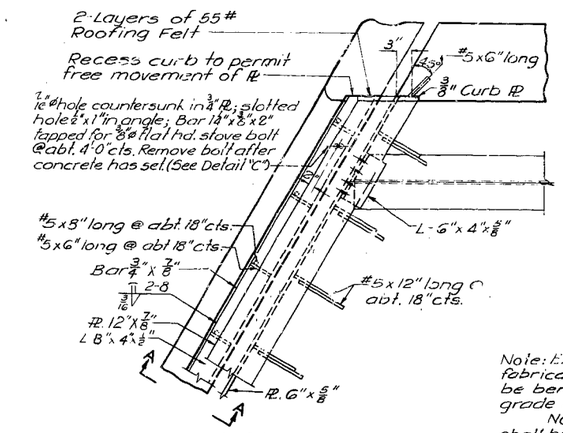

PART PLAN

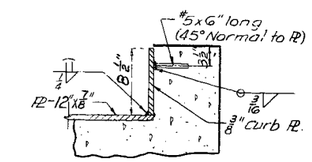

SECTION THRU CURB

Note: Expansion Device shall be fabricated in one section and shall be bent to conform to crown and grade of roadway.

No. 5 bars for expansion device shall be structural grade. Approved stud welded anchors may be used in lieu of #5 bars shown.

Use 2 Layers of 55# Roofing Felt between the sliding contact surface of curb plate and concrete backwall.

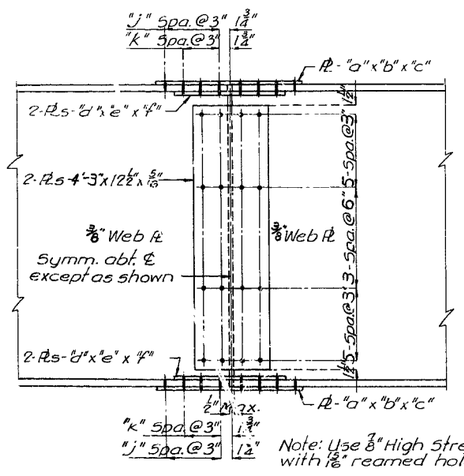

Note: Use 7/8" High Strength Bolts with 15/16" reamed holes.

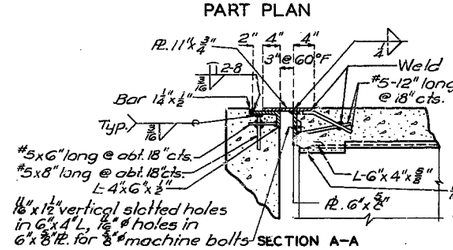

SECTION A-A

EXPANSION DEVICE AT END BENT NO. 1

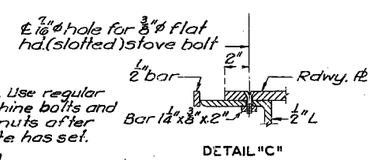

DETAIL "C"

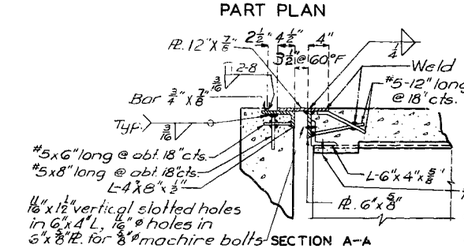

SECTION A-A

EXPANSION DEVICE AT END BENT NO. 4

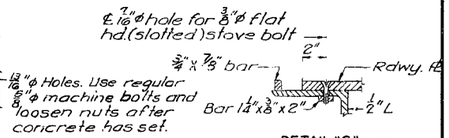

DETAIL "C"

SPLICE LOCATION	TABLE OF DIMENSIONS — FIELD SPLICE									
	a	b	c	d	e	f	g	j	k	m
S1-Top of Ext & Int Gdr.	10"	3/8"	2'-0 1/2"	4"	1/2"	2'-0 1/2"	2"	3	3	6"
S1-Bott. of Ext & Int Gdr.	10"	3/8"	2'-0 1/2"	4"	1/2"	2'-0 1/2"	2"	3	3	6"
S2-Top of Ext & Int Gdr.	10"	3/8"	2'-0 1/2"	4	1/2"	2'-0 1/2	2"	3	3	6"
S2-Bott. of Ext. Gdr.	12"	5/8"	2'-6 1/2"	5	1/2"	2'-6 1/2	2 1/2"	4	4	7"
S2-Bott. of Int Gdr.	11"	3/8"	2'-0 1/2	4 1/2"	1/2"	2'-0 1/2"	2 1/4"	3	3	6 1/2"

BRIDGE OVER DRY AUGLAIZE CREEK

STATE ROAD FROM FREEDOM SOUTHEAST TO RICHLAND

ABOUT 16.2 MILES N.W. OF RICHLAND

PROJECT NO. S-1064(2) SA **STA.** 475 + 55.5

CAMDEN **COUNTY**

DETAILED NOV. 1966 BY KLIETHERMES
CHECKED Mar 1967 BY Epple

DETAILS OF FIELD SPLICE

Note: This drawing is not to scale. Follow dimensions.

Sheet No. 7 of 9.

A-2095

156

MISSOURI STATE HIGHWAY DEPARTMENT

FED. ROAD DIST. NO.	STATE	FED. AID PROJ. NO.	FISCAL YEAR	SHEET NO.	TOTAL SHEETS
5	MO.		19	18	

Note: Longitudinal Reinforcing steel shall be placed so that ends shall not be more than 1" from ⅜" plate at Exp. Device.

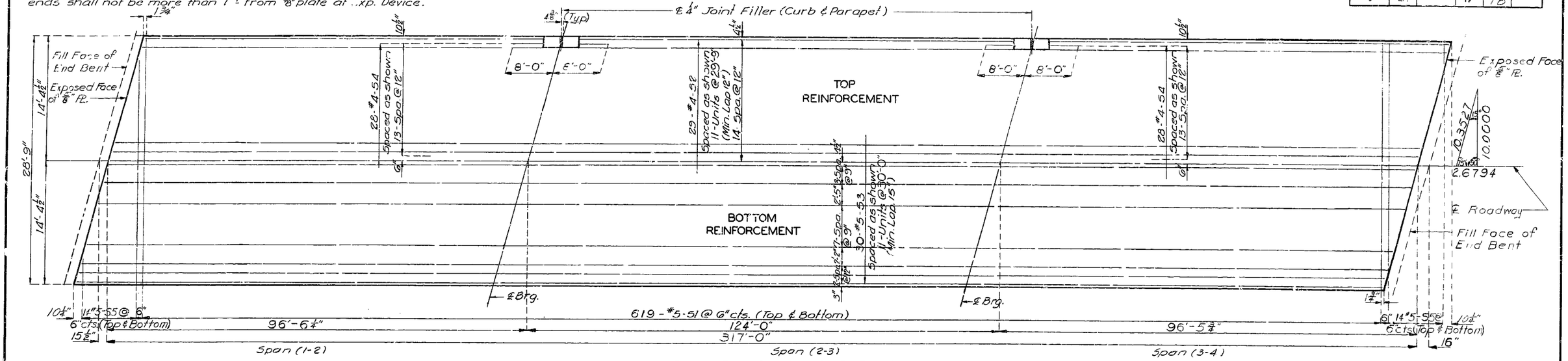

PLAN OF SLAB SHOWING REINFORCEMENT

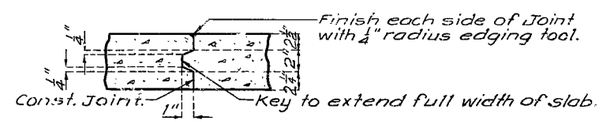

SECTION A-A

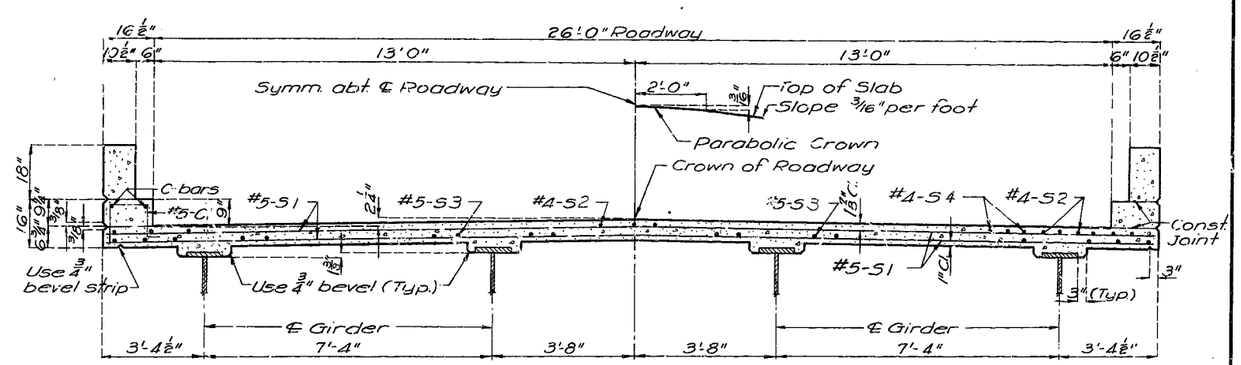

HALF SECTION NEAR ℄ SPAN

HALF SECTION NEAR CROSS FRAMES

Note: For details of curb and handrail not shown see sheet No. 9 of 9.

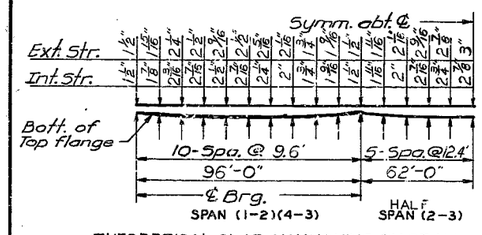

THEORETICAL SLAB HAUNCHING DIAGRAM

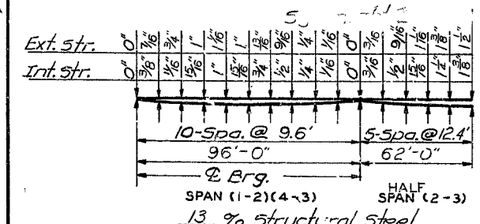

13 % Structural Steel

DEAD LOAD DEFLECTION

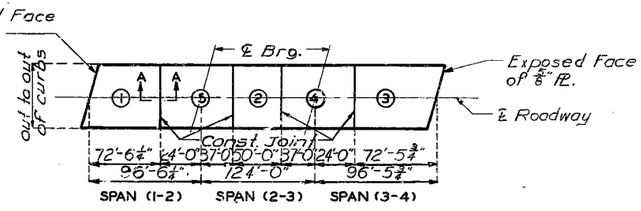

	Sequence of Pours				
	Direction				
Basic Sequence	1	2	3	4	5
	Either Direction				
Alternate "A" Pours	1	5+2		4+3	
	End to 5	1 to 4		2 to End	
Alternate "B" Pours	End to 4		2 to End		
Alternate "C" Pours	1+5+2+4+3				
	End to End				

Note: The contractor shall observe the basic pouring sequence and shall pour and satisfactorily finish the slab pours at a rate of not less than 12 cubic yards per hour. However, he may use one of the longer alternate pours if he elects to use an approved oscillating screed type, self propelled mechanical finishing machine and can demonstrate to the engineer that he can pour and satisfactorily finish the slab pours at a rate of not less than 37 cubic yards per hour. Finishing machine loads will not be permitted on concrete less than 48 hours old.

SLAB POURING SEQUENCE

BRIDGE OVER DRY AUGLAIZE CREEK

STATE ROAD FROM FREEDOM SOUTHEAST TO RICHLAND

ABOUT 16.2 MILES N.W. OF RICHLAND

PROJECT NO. S-1064(2) SA **STA.** 475+55.5

CAMDEN **COUNTY**

DETAILED DEC. 1966 BY KLIETHERMES

CHECKED Mar. 1967 BY Epple

Note: This drawing is not to scale. Follow dimensions.

Sheet No. 8 of 9.

A-2095

137

MISSOURI STATE HIGHWAY DEPARTMENT

FED. ROAD DIST. NO.	STATE	FED. AID PROJ. NO.	FISCAL YEAR	SHEET NO.	TOTAL SHEETS
5	MO		19	19	

GENERAL HANDRAIL NOTES:

All handrail posts shall be set normal to grade.

Aluminum tube handrail shall be bent to conform to vertical and horizontal alignment of parapet.

Aluminum washer shims between top of parapet and post base may be used for adjusting handrail alignment. Maximum thickness of shims to be 1/8". Where more tilting of post is required for proper alignment, concrete bearing areas shall be ground down.

All parts of handrail, except anchor bolts, nuts, washers, and set screws are to be of aluminum material.

The contract unit price per linear foot of "Bridge Rail" shall include furnishing and erecting the handrail complete with anchor bolts, shims and insulating compound.

All fillets 1/4" except as noted.

All drafts 3° except as noted.

Pipe rail to be fabricated in a minimum of 2 panel lengths.

Omit set screw on side adjacent to filled Joint in parapet and curb at all expansion posts.

Top of curbs and parapets to be built parallel to grade with curb and parapet Joints (except at end posts) normal to grade.

Concrete end posts to be vertical.

All exposed edges of end posts shall have 1/2" bevel. All exposed edges of curbs and parapets shall have 1/2" radius or 3/8" bevel unless otherwise noted.

If the contractor desires, he ~~may~~ use drive fit cast aluminum end caps in lieu of welded aluminum closure plates.

Integrally cast test coupons and a coat of clear lacquer specified in Std. Spec. 56.2.4 and 56.3.5 respectively will not be required for these rail posts.

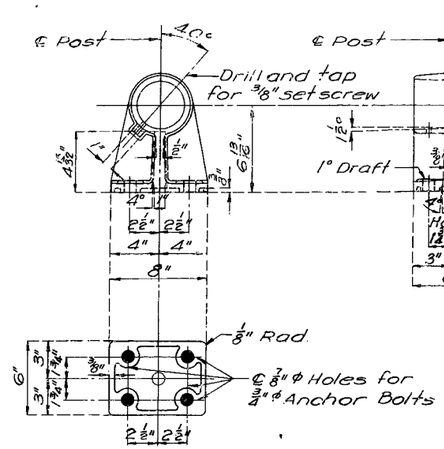

POST DETAILS

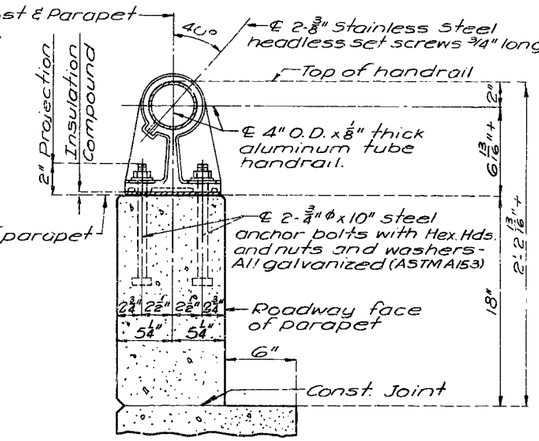

SECTION THRU HANDRAIL

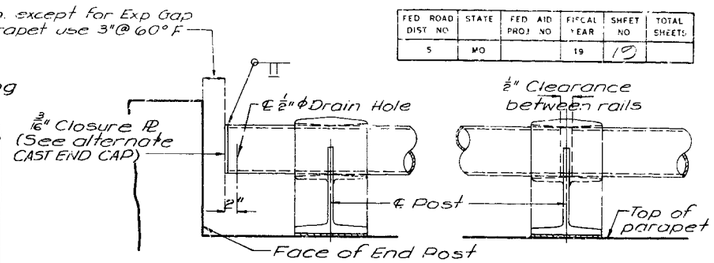

TYPICAL HANDRAIL DETAILS

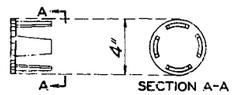

CAST END CAP
(Drive Fit Type)

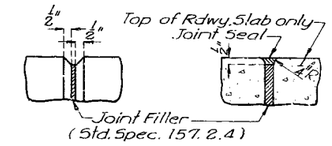

FILLED JOINT DETAILS

SINGLE TUBE ALUMINUM RAILING

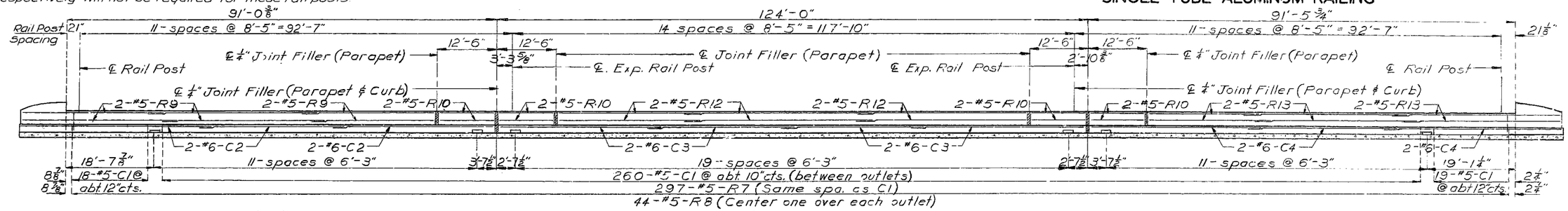

SECTION NEAR LEFT CURB AND PARAPET

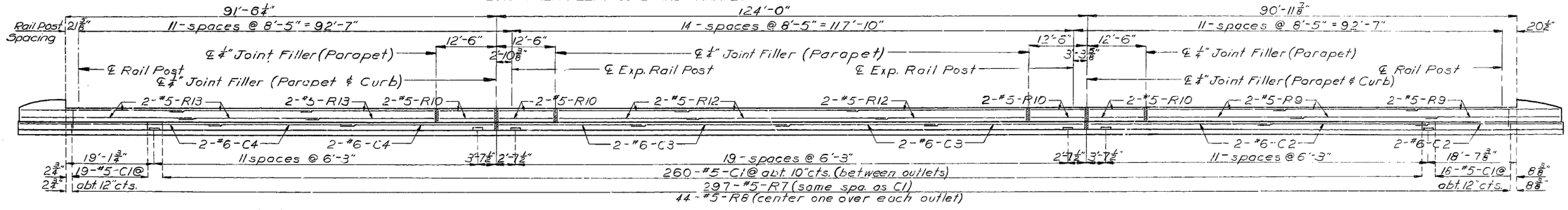

ELEVATION OF RIGHT CURB AND PARAPET

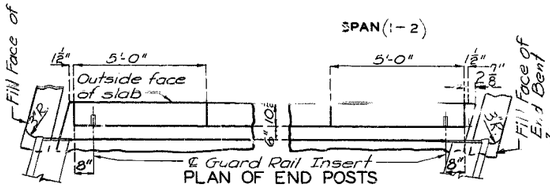

PLAN OF END POSTS

Note: Anchors for attaching guard rail shall be 3/4" threaded (Galv.) inserts having a Min. depth of 4" and filled with a plastic closing plug. Cost for furnishing & installing the insert & plug will be included in price bid for other items.

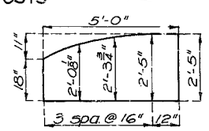

END POST ORDINATES

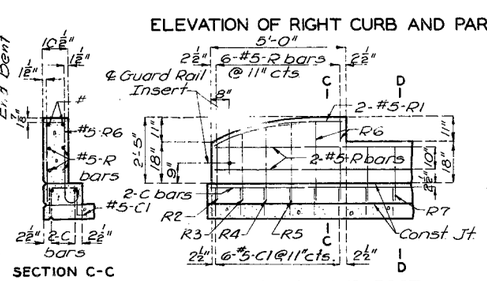

SECTION C-C

ELEVATION OF END POST

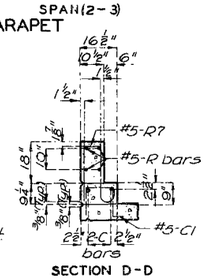

SECTION D-D

Note: When curb outlets are omitted space #5-C1 bars at abt. 12" cts.

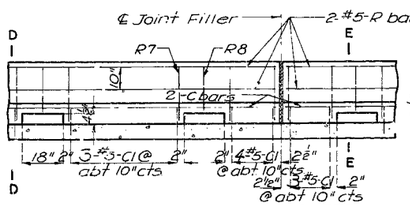

ELEVATION OF CURB & PARAPET

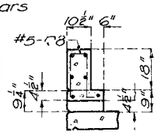

SECTION E-E

Note: For horizontal curb and parapet bars use a minimum lap of 15" for #5 and 18" for #6

BRIDGE OVER DRY AUGLAIZE CREEK

STATE ROAD FROM FREEDOM SOUTHEAST TO RICHLAND

ABOUT 16.2 MILES N.W. OF RICHLAND

PROJECT NO. S-1064(2) S.A. **STA.** 475+55.5

CAMDEN COUNTY

A-2095

Note: This drawing is not to scale. Follow dimensions.

Sheet No. 9 of 9.

STD. 1.5.2 SK.	REVISED
MAR. 1964	JAN. 1967

DETAILED FEB. 1967 BY KLIETHERMES

CHECKED Mar 1967 BY Epple

158

MISSOURI STATE HIGHWAY DEPARTMENT

(96'-124'-96') Cont. Composite Welded I2 Girder Spans

FINAL PLANS

FED ROAD DIST NO.	STATE	FED AID PROJ NO	FISCAL YEAR	SHEET NO	TOTAL SHEETS
5	MO		19	11	

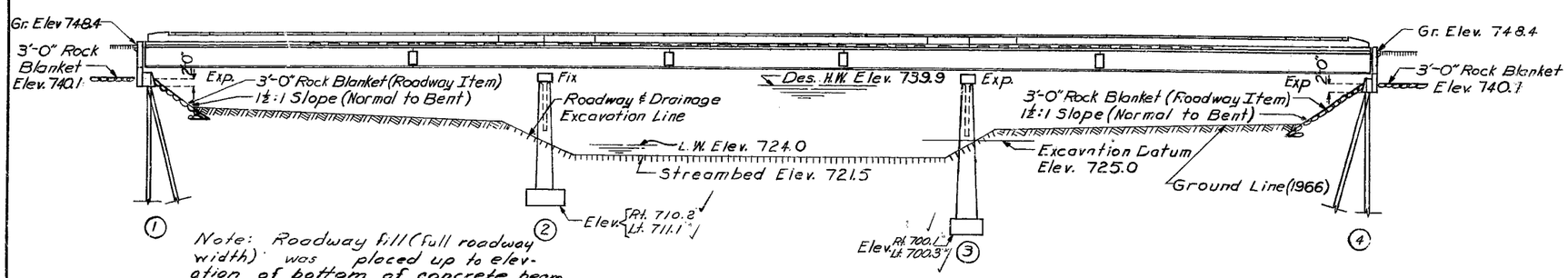

Note: Roadway fill (full roadway width) was placed up to elevation of bottom of concrete beam in front of and not less than 25'-0" in back of End Bents before steel piles were driven for End Bents No. 1 & 4.

GENERAL ELEVATION

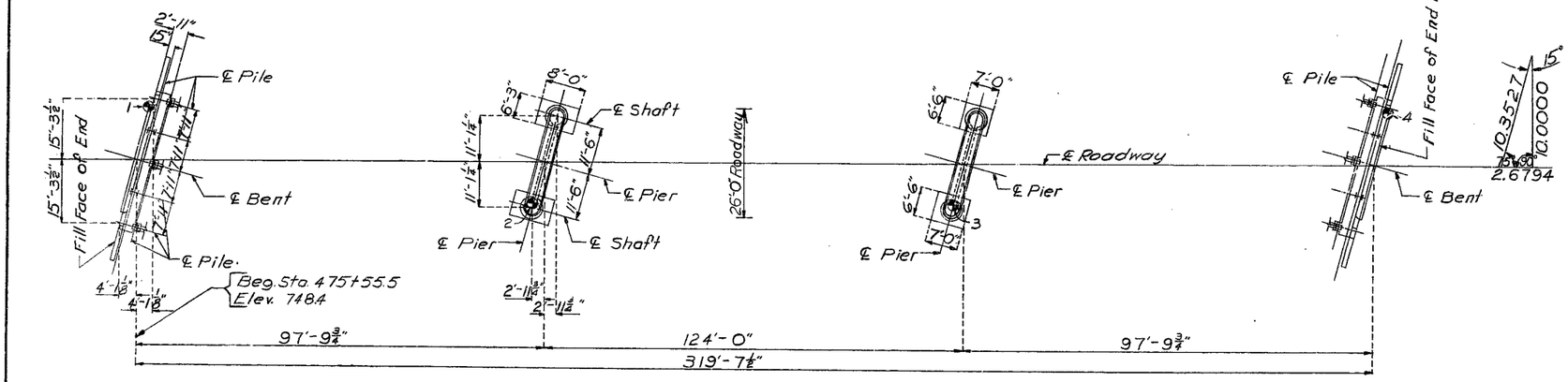

PLAN

Note: For Boring Data see sheet No. 2 of 9.
"③" Indicates location of boring.

Note: No payment for excavation was allowed at End Bents No. 1 & 4.

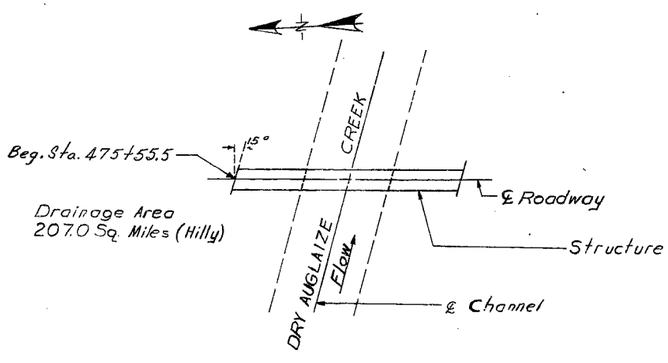

LOCATION SKETCH

GENERAL NOTES:

Design Specifications: A.A.S.H.O. - 1965

Design Loading:
H15-44 15#/sq. ft. Future Wearing Surface
Earth 120# Equivalent Fluid Pressure 30#
Fatigue Loading: AWS D2.0-66 Formula 15b & 16b

Design Unit Stresses:
Class B Concrete (substructure) fc = 1,200 psi
Class B1 Concrete (superstructure) fc = 1,600 psi
Reinforcing Steel fs = 20,000 psi
Structural Steel (A.S.T.M. A36-66) fs = 20,000 psi
Steel Pile (A.S.T.M. A36-66) fb = 9,000 psi.

Surface Seal:
Superstructure deck was surface sealed.

Fabricated Steel:
Field connections, High Strength Bolts ¾"φ, holes 13/16"φ except as noted.
Details of welded joints shown are for manual arc welding except as noted.

PILE & FOOTING DATA

	BENT NO.	1	2	3	4
BEARING PILE	Pile Type and Size	10BP42			10BP42
	Number	5			5
	Approximate Length Ft.	37			29
	Design Bearing Tons	44			44
	Hammer Energy req'd. Ft.Lbs.	10,800			10,800
SPREAD FOOTINGS	Foundation Material		Rock	Rock	
	Design Bearing Tons/Sq. Ft.		94	8.0 Lt. 8.6 Rt.	

Minimum energy requirement of hammer based on plan length and design bearing value of piles. Increase by the factor (W+w)/2W when the weight of the ram (W) is less than the weight of the pile (w).
All pile were driven to practical refusal.

QUANTITIES

ITEM		SUBSTR.	SUPERSTR.	TOTAL
Class 1 Excavation for structure	Cu. yd.	0		0
Class 2 Excavation for structure	Cu. yd.	234.5		234.5
Steel Piles in Place (10")	Lin. Ft.	309		309
Class B Concrete	Cu. yd.	155.6		155.6
Class B1 Concrete	Cu. yd.		252.0	252.0
Reinforcing Steel	Lbs.	154800	65360	81040
Fabricated Structural Carbon Steel	Lbs.		203720	203720
Bridge Rail (Single tube type)	Lin. Ft.		612	612
Class 2 Excavation for Structure +50%	Cu. Yd.	350		350
Test Holes	Lin. Ft.	29		29
Excavation 8" Plus Below Plan	F.A.	1291.98		1291.98

FINISHED

B.M. X Top Rt. Wing Abut. #1 Bridge Sta. 475+55.5 Elev. 748.96

BRIDGE OVER DRY AUGLAIZE CREEK

STATE ROAD FROM FREEDOM SOUTHEAST TO RICHLAND
ABOUT 16.2 MILES N.W. OF RICHLAND
PROJECT NO. S-1064(2) SA STA. 475+55.5

CAMDEN COUNTY

SUBMITTED BY D. B. Jensen BRIDGE ENGINEER DATE 4/11/67
APPROVED BY M. G. Snider CHIEF ENGINEER DATE 4/11/67

STD. A-2095

DESIGNED Nov. 1966 BY Morshedi
DETAILED JAN. 1967 BY KLIETHERMES
CHECKED Mar 1967 BY Eff'e

Note: This drawing is not to scale. Follow dimensions.

Sheet No. 1A of 2

FINAL PLAN

159

MISSOURI STATE HIGHWAY DEPARTMENT

FED ROAD DIST NO	STATE	FED AID PROJ NO	FISCAL YEAR	SHEET NO	TOTAL SHEETS
5	MO.		19	14	

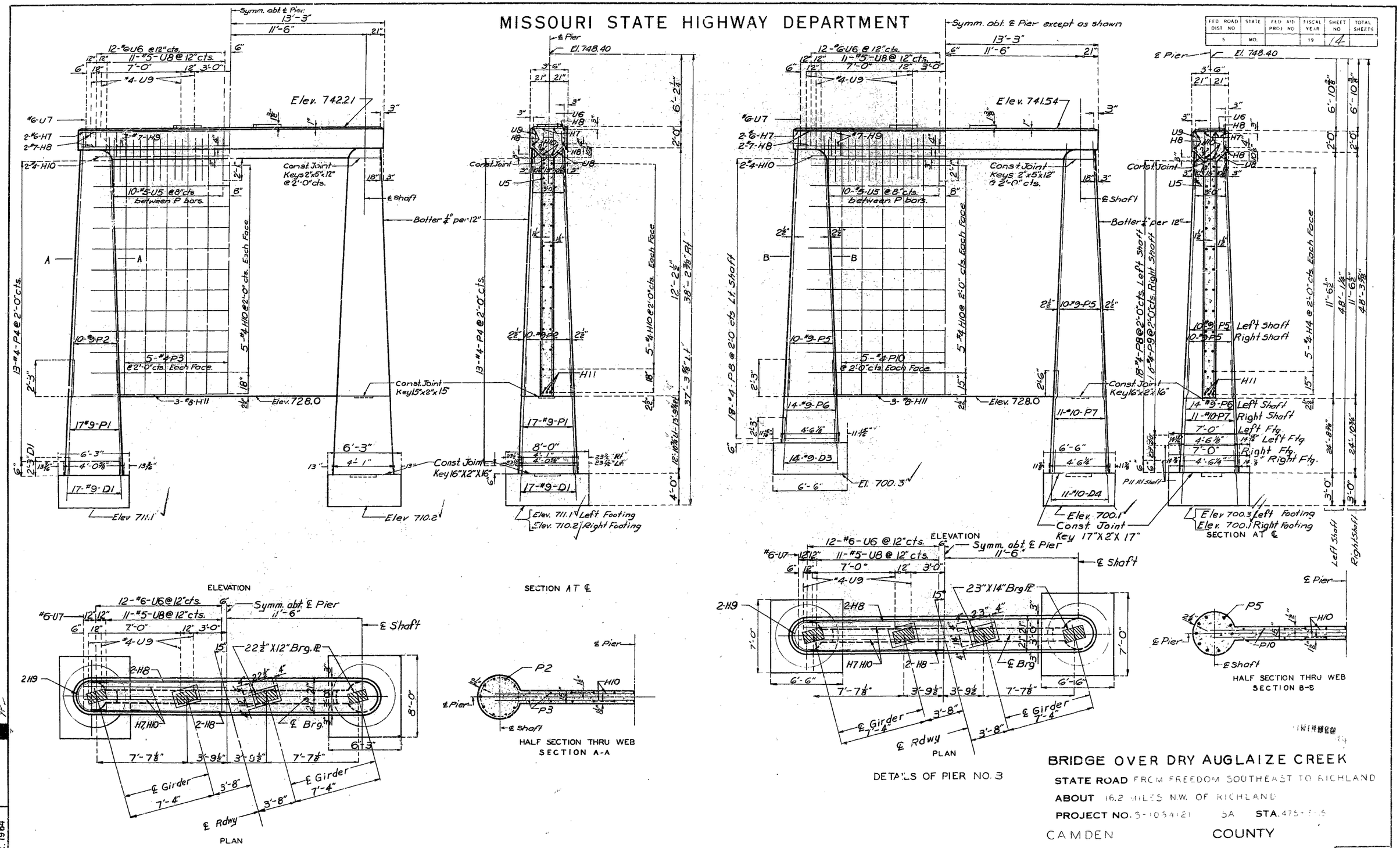

BRIDGE OVER DRY AUGLAIZE CREEK

STATE ROAD FROM FREEDOM SOUTHEAST TO RICHLAND

ABOUT 16.2 MILES N.W. OF RICHLAND

PROJECT NO. S-1054(2) 5A STA. 475-[illegible]

CAMDEN COUNTY

JTD. 20.2	REVISED
MAR. 1964	

DETAILED DEC 1966 BY FLIETHERMES-Rks

CHECKED Mar. 1967 BY

Sheet No. 4A of 2

A-2095

SEC/SUR 36 TWP 37N RGE 14W

U.I.P. AND REDECK EXISTING (37'- 48'- 37') CONTINUOUS COMPOSITE WIDE FLANGE BEAM SPANS (15° L.A.)

Required Lap Length For Bar Splices ✱✱	
Bar Size	Splice Length
4	2'-7"
5	3'-3"
6	3'-10"
7	4'-11"

✱✱ Unless otherwise shown.

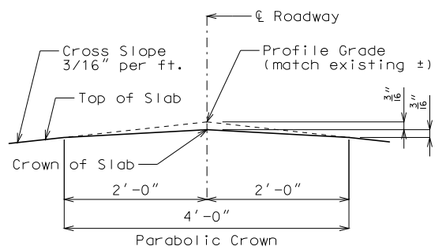

DETAIL A

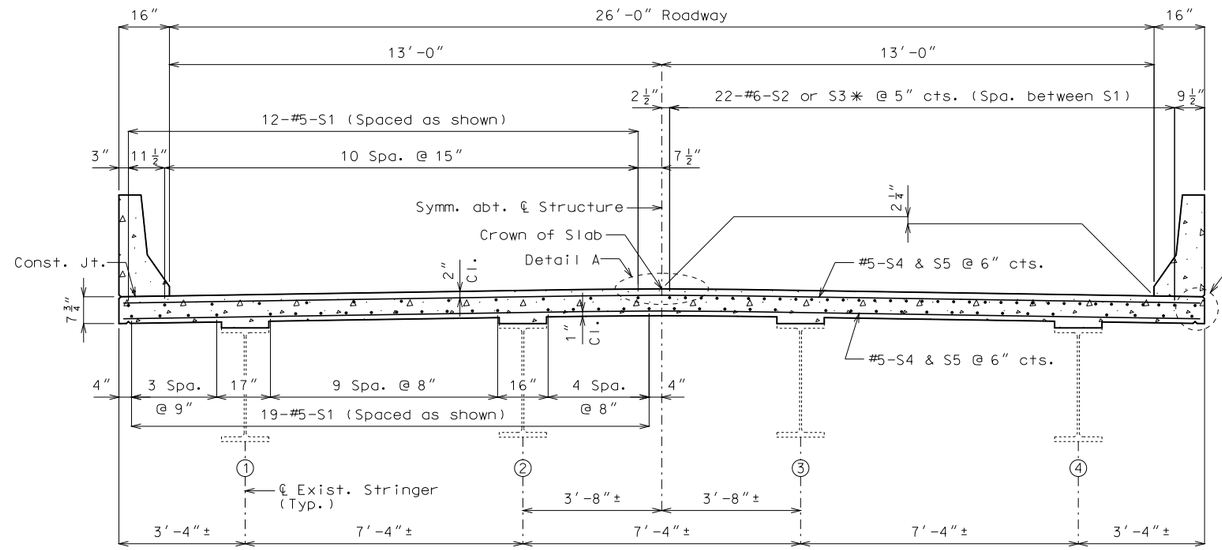

✱ S2 Bars @ Int. Bent No. 2.
S3 Bars @ Int. Bent No. 3.

HALF SECTION NEAR MIDSPAN HALF SECTION NEAR INT. BENT

TYPICAL SECTION THRU SLAB

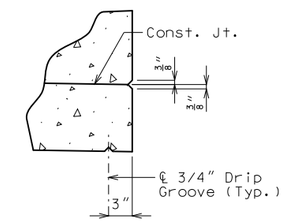

DETAIL B

General Notes:

Design Specifications:
2002 - AASHTO LFD (17th Ed.) Standard Specifications
Seismic Performance Category A

Design Loading:
H15-44 (1965) (Existing)
HS20-44 (New Construction)
35 lb/sf Future Wearing Surface

Design Unit Stresses:
Class B-1 Concrete (Safety Barrier Curb) f'c = 4,000 psi
Class B-2 Concrete (End Bents & Superstructure, except Safety Barrier Curb) f'c = 4,000 psi
Reinforcing Steel (Grade 60) fy = 60,000 psi

Joint Filler:
All joint filler shall be in accordance with Sec 1057 for preformed sponge rubber expansion and partition joint filler, except as noted.

Reinforcing Steel:
Minimum clearance to reinforcing steel shall be 1 1/2", unless otherwise shown.

Miscellaneous:
Bars bonded in old concrete not removed shall be cleanly stripped and embedded into new concrete where possible. If length is available, old bars shall extend into new concrete at least 40 diameters for smooth bars and 30 diameters for deformed bars, unless otherwise noted.

Roadway surfacing adjacent to bridge ends shall match new bridge slab surface (Roadway Item).

Outline of old work is indicated by light dashed lines. Heavy lines indicate new work.

Contractor shall verify all dimensions in field before ordering new material.

The area exposed by the removal of concrete and not covered with new concrete shall be coated with an approved qualified special mortar in accordance with Sec 704.

In order to properly form the haunches for the new deck, the contractor shall shoot deck elevations along each girder line prior to deck removal followed by shooting elvations of the tops of the girders after deck removal.

Traffic Handling:
Structure to be closed during construction.

Table Showing S2 & S3 Bar Lengths			
Int. Bent No. 2		Int. Bent No. 3	
Span 1	Span 2	Span 2	Span 3
14'-6"	14'-9"	13'-6"	14'-6"

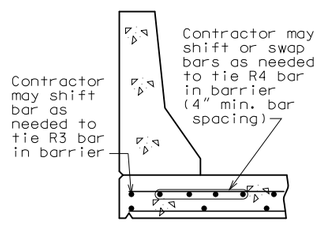

OPTIONAL SHIFTING TOP BARS AT BARRIER

Estimated Quantities		
Item		Total
Removal of Existing Bridge Decks	sq. foot	3607
Slab on Steel	sq. yard	400
✱ Safety Barrier Curb	linear foot	250
Non-Destructive Testing	linear foot	38

✱ Safety barrier curb shall be cast-in-place option or slip-form option.

Cost of any required excavation for bridge will be considered completely covered by the contract unit price for other items.

Estimated Quantities for Slab on Steel		
Item		Total
Class B-2 Concrete	cu. yard	95.9
Reinforcing Steel (Epoxy Coated)	pound	27,920

The table of Estimated Quantities for Slab on Steel represents the quantities used by the State in preparing the cost estimate for concrete slabs. The area of the concrete slab will be measured to the nearest square yard longitudinally from end of slab to end of slab and transversely from out to out of bridge slab (or with the horizontal dimensions as shown on the plan of slab). Payment for stay-in-place forms, conventional forms, all concrete and coated reinforcing steel will be considered completely covered by the contract unit price for the slab. Variations may be encountered in the estimated quantities but the variations cannot be used for an adjustment in the contract unit price.

Method of forming the slab shall be in accordance with Sec 703. All hardware for forming the slab to be left in place as a permanent part of the structure shall be coated in accordance with ASTM A123 or ASTM B633 with a thickness class SC 4 and a finish type I, II or III.

Slab shall be cast-in-place with conventional forming or stay-in-place corrugated steel forms. Precast prestressed panels will not be permitted.

For optional Stay-In-Place Form Details, see Sheet No. 2.

REPAIRS TO BRIDGE:
ROUTE A OVER CONNS CREEK
ROUTE A FROM RTE C TO RTE 7
ABOUT 2.5 MILES N.W. OF RTE 7
STA. 1184+40.00± (Match existing)

STD. 617.10
STD. 706.35

Detailed Apr. 2016
Checked May 2016

Note: This drawing is not to scale. Follow dimensions.

STATE OF MISSOURI
ANOUSONE AROUNPRADITH
NUMBER PE-29317
PROFESSIONAL ENGINEER
THIS SHEET HAS BEEN SIGNED, SEALED AND DATED ELECTRONICALLY.

DATE PREPARED 8/26/2016
ROUTE A | STATE MO
DISTRICT BR | SHEET NO. 1
COUNTY CAMDEN
JOB NO. J5S3147
CONTRACT ID.
PROJECT NO.
BRIDGE NO. A20971

DESCRIPTION | DATE

MISSOURI HIGHWAYS AND TRANSPORTATION COMMISSION
105 WEST CAPITOL
JEFFERSON CITY, MO 65102
1-888-ASK-MODOT (1-888-275-6636)

IF A SEAL IS PRESENT ON THIS SHEET IT HAS BEEN ELECTRONICALLY SEALED AND DATED.

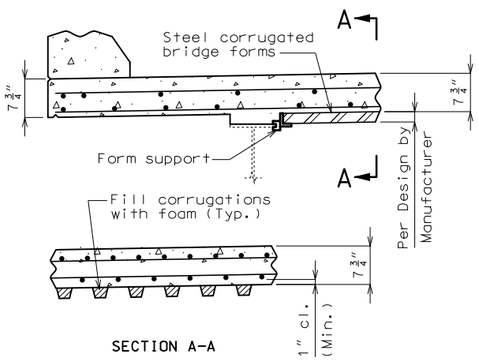

OPTIONAL STAY-IN-PLACE FORM DETAILS

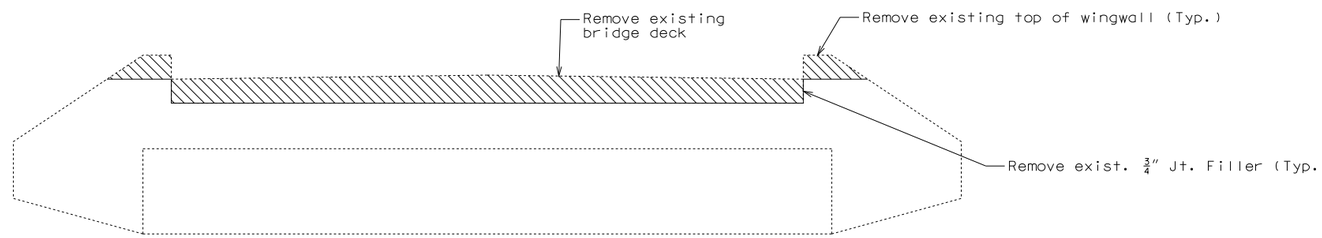

DETAILS OF CONCRETE REMOVAL AT END BENTS

The cost of concrete removal as shown will be considered completely covered by the contract unit price for Removal of Existing Bridge Decks. Vertical wingwall reinforcement shall be cut off one inch below concrete removal surface and the resulting holes shall be filled with an approved qualified special mortar.

General Notes:

Corrugated steel bridge deck forms, supports closure elements and accessories shall be in accordance with grade requirement and coating designation G165 of ASTM A653. Complete shop drawings of the permanent steel deck forms shall be required in accordance with Sec 1080.

Corrugations of stay-in-place forms shall be filled with an expanded polystyrene material. The polystyrene material shall be placed in the forms with an adhesive in accordance with the manufacturer's recommendations.

Form sheets shall not rest directly on the top of girders, stringers or floorbeams flanges. Sheets shall be securely fastened to form supports with a minimum bearing length of one inch on each end. Form supports shall be placed in direct contact with the flange. Welding on or drilling holes in the flanges of the girders, stringers or floorbeams will not be permitted. All steel fabrication and construction shall be in accordance with Sec's 1080 and 712. Certified field welders will not be required for welding of the form supports.

The design of stay in place corrugated steel forms is per manufacturer which shall be in accordance with Sec 703 for false work and forms. Maximum actual weight of corrugated steel forms allowed shall be 4 psf assumed for girder loading.

The contractor shall provide bracing necessary for lateral and torsional stability of the girders during construction of the concrete slab and remove the bracing after the slab has attained 75% design strength. The cost for furnishing, installing, and removing bracing will be considered completely covered by the contract unit price for Slab on Steel.

Slab shall be poured upgrade from end to end at a minimum rate of 25 cu. yd./ hr.

Alternate pour sequences may be submitted to the engineer for approval. Keyed construction joints shall be provided between pours.

Slab is to be considered at a uniform depth as shown on the plans. Haunching will vary.

Deflection Note:
The contractor shall determine dead load deflections and haunching based on field measurements and/or existing bridge plans and may be adjusted based on the difference between the new and existing dead load weights.

Detailed Apr. 2016
Checked May 2016

Note: This drawing is not to scale. Follow dimensions.

STATE OF MISSOURI
ANOUSONE AROUNPRADITH
NUMBER PE-29317
PROFESSIONAL ENGINEER
THIS SHEET HAS BEEN SIGNED, SEALED AND DATED ELECTRONICALLY.

DATE PREPARED 8/4/2016
ROUTE A | STATE MO
DISTRICT BR | SHEET NO. 2
COUNTY CAMDEN
JOB NO. J5S3147
CONTRACT ID.
PROJECT NO.
BRIDGE NO. A20971

DATE	DESCRIPTION

MISSOURI HIGHWAYS AND TRANSPORTATION COMMISSION
105 WEST CAPITOL
JEFFERSON CITY, MO 65102
1-888-ASK-MODOT (1-888-275-6636)

IF A SEAL IS PRESENT ON THIS SHEET IT HAS BEEN ELECTRONICALLY SEALED AND DATED.

Notes: Resin anchors not shown for clarity.

Existing steel end diaphragms not shown for clarity (use-in-place).

Longitudinal slab reinforcement not shown for clarity.

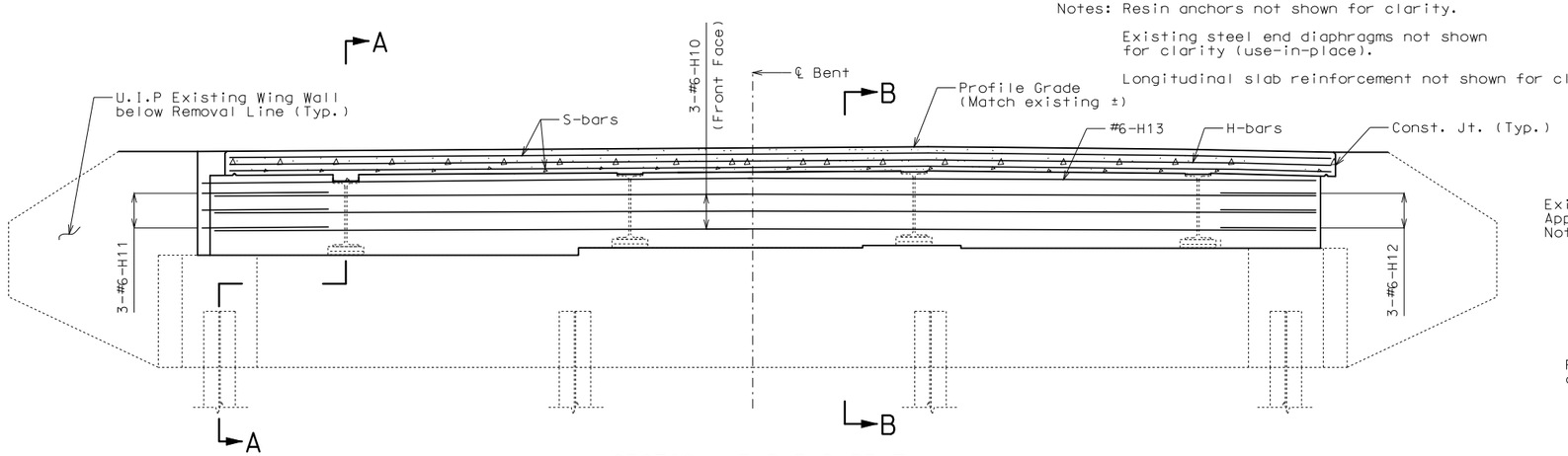

SECTION NEAR END BENT

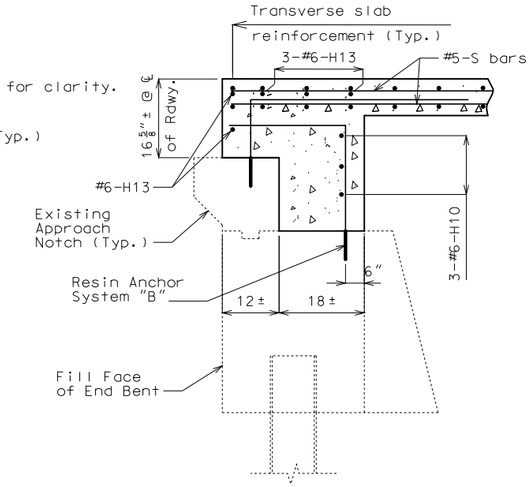

SECTION B-B

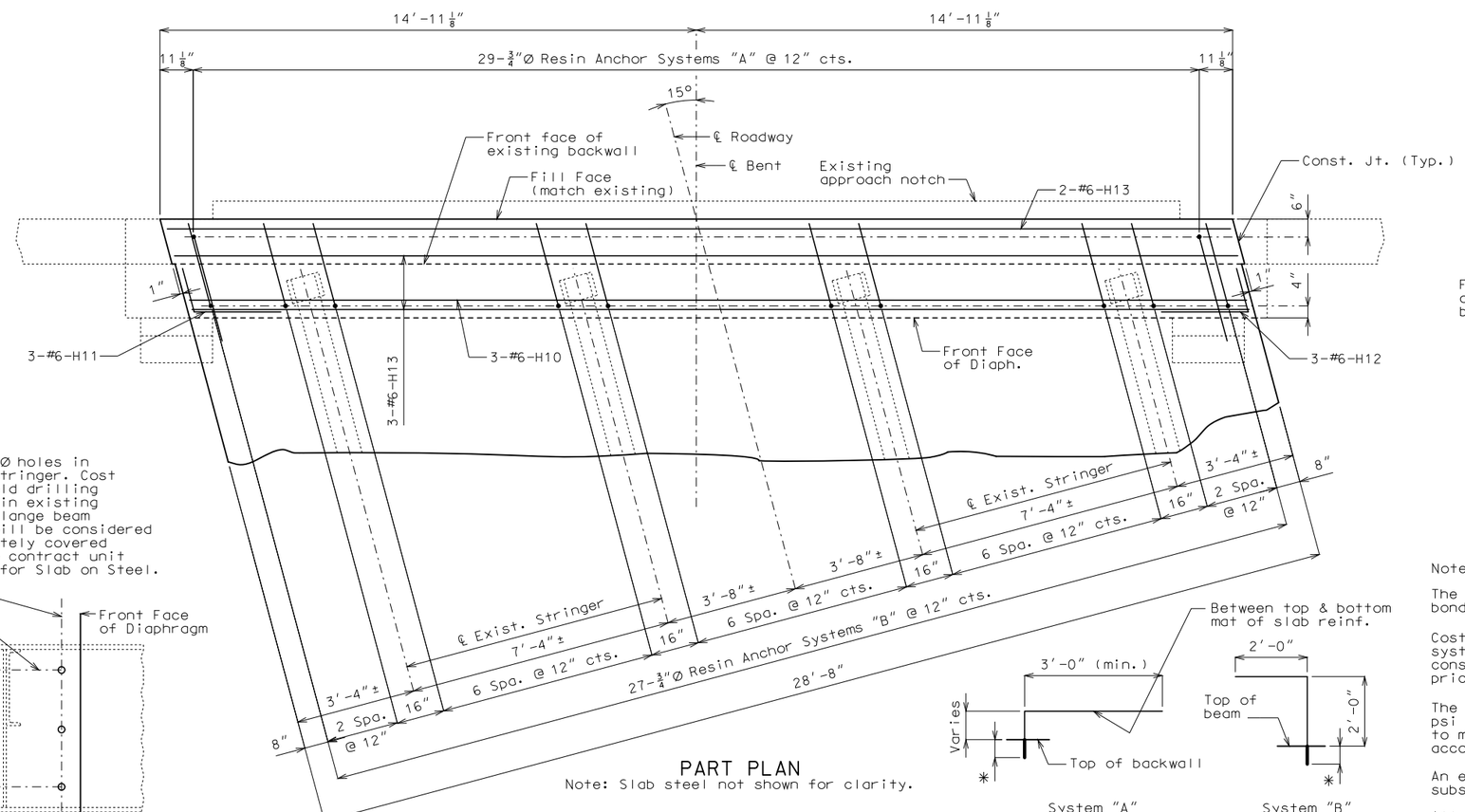

PART PLAN

Note: Slab steel not shown for clarity.

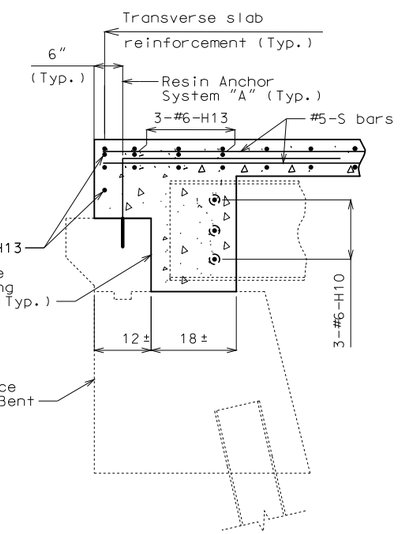

SECTION A-A

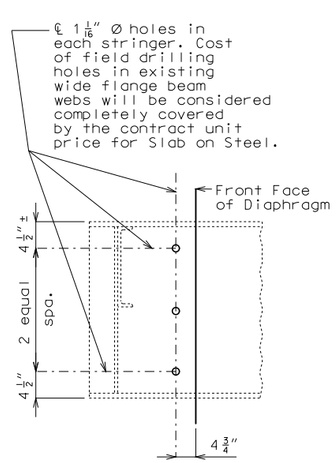

DETAIL OF WEB HOLES AT END BENTS

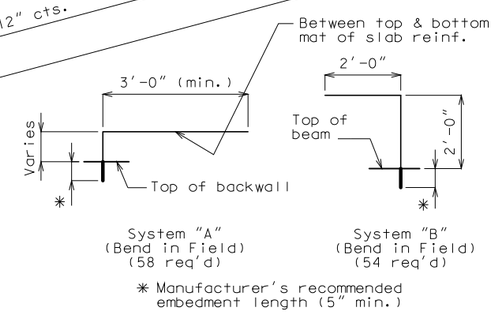

DETAILS OF RESIN ANCHOR SYSTEMS

Notes:

The contractor shall use one of the qualified epoxy bonding materials in accordance with Sec 1039.

Cost of furnishing and installing the resin anchor systems shown on this sheet complete-in-place will be considered completely covered by the contract unit price for Slab on Steel.

The minimum embedment depth in concrete with f'c = 4,000 psi for the resin anchor system shall be that required to meet the minimum ultimate pullout strength in accordance with Sec 1039 but shall not be less than 5".

An epoxy coated #6 Grade 60 reinforcing bar shall be substituted for the 3/4" Ø threaded rod.

All concrete and reinforcement in diaphragm is included in the Table of Estimated Quantities for Slab on Steel and will be considered completely covered by the contract unit price for Slab on Steel.

The exposed and accessible surfaces of the existing structural steel and bearings that will be encased in concrete shall be cleaned with a minimum of SSPC-SP-2 surface preparation before concrete is poured. Payment for cleaning steel to be encased in concrete will be considered completely covered by the contract unit price for Slab on Steel.

DETAILS OF END BENTS NO. 1 & 4

(End Bent No. 1 shown, End Bent No. 4 opposite)

Note: This drawing is not to scale. Follow dimensions.

Sheet No. 3 of 7

Detailed Apr. 2016
Checked May 2016

STATE OF MISSOURI
ANOUSONE AROUNPRADITH
NUMBER PE-29317
PROFESSIONAL ENGINEER

THIS SHEET HAS BEEN SIGNED, SEALED AND DATED ELECTRONICALLY.

DATE PREPARED	8/4/2016
ROUTE	A
STATE	MO
DISTRICT	BR
SHEET NO.	3
COUNTY	CAMDEN
JOB NO.	J5S3147
CONTRACT ID.	
PROJECT NO.	
BRIDGE NO.	A20971

DESCRIPTION	DATE

MISSOURI HIGHWAYS AND TRANSPORTATION COMMISSION
105 WEST CAPITOL
JEFFERSON CITY, MO 65102
1-888-ASK-MODOT (1-888-275-6636)

IF A SEAL IS PRESENT ON THIS SHEET IT HAS BEEN ELECTRONICALLY SEALED AND DATED.

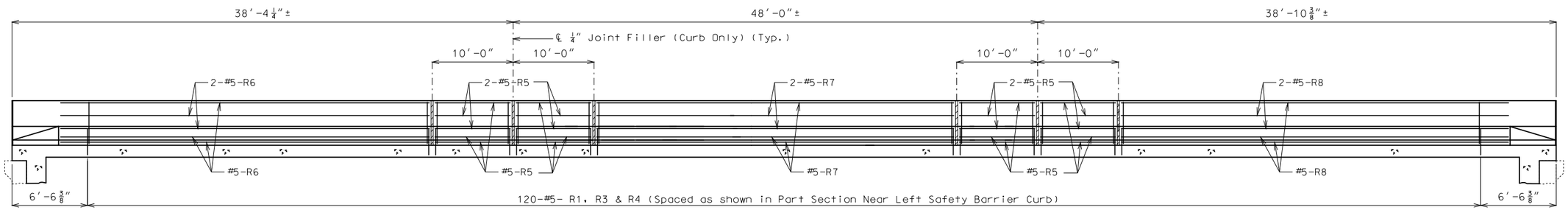

SECTION NEAR LEFT SAFETY BARRIER CURB

(Right Safety Barrier Curb similar)

Note: Longitudinal dimensions are horizontal.

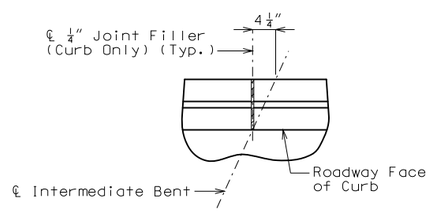

PART PLAN SHOWING SAFETY BARRIER CURB JOINT

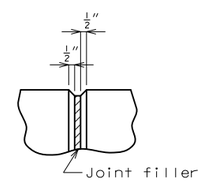

FILLED JOINT DETAIL

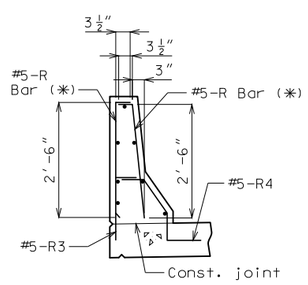

R-BAR PERMISSIBLE ALTERNATE SHAPE

(✱) The R1 bar may be separated into two bars as shown, at the contractor's option, only when slip forming is not used. (All dimensions are out to out.)

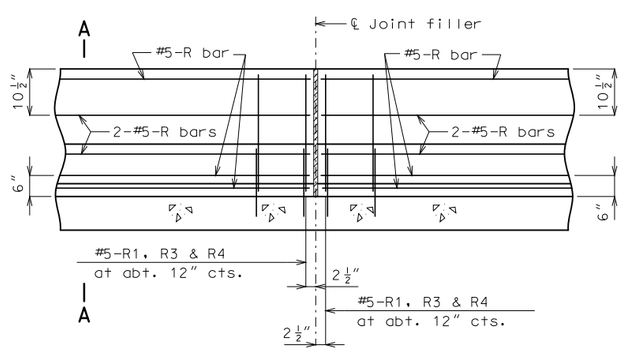

PART SECTION NEAR LEFT SAFETY BARRIER CURB (CAST-IN-PLACE CONVENTIONAL FORMING OPTION)

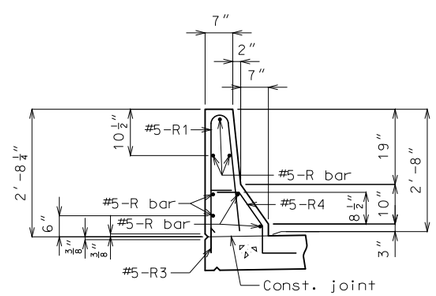

PART SECTION A-A

Notes:

Use a minimum lap of 2′-11″ for #5 horizontal safety barrier curb bars.

The cross-sectional area above the slab = 2.27 sq. ft.

Notes:

Top of safety barrier curb shall be built parallel to grade with barrier curb joints normal to grade.

All exposed edges of safety barrier curb shall have either a 1/2″ radius or a 3/8″ bevel, unless otherwise noted.

Payment for all concrete and reinforcement, complete in place, will be considered completely covered by the contract unit price for safety barrier curb per linear foot.

Concrete in the safety barrier curb shall be Class B-1.

Measurement of safety barrier curb is to the nearest linear foot for each structure, measured along the outside top of slab from end of slab to end of slab.

Concrete traffic barrier delineators shall be placed on top of the safety barrier curb as shown on Missouri Standard Plans 617.10 and in accordance with Sec 617. Delineators on bridges with two-lane, two-way traffic shall have retroreflective sheeting on both sides. Concrete traffic barrier delineators will be considered completely covered by the contract unit price for "Safety Barrier Curb".

STATE OF MISSOURI
ANOUSONE AROUNPRADITH
NUMBER PE-29317
PROFESSIONAL ENGINEER

THIS SHEET HAS BEEN SIGNED, SEALED AND DATED ELECTRONICALLY.

DATE PREPARED	
8/4/2016	
ROUTE: A	STATE: MO
DISTRICT: BR	SHEET NO.: 4
COUNTY: CAMDEN	
JOB NO.: J5S3147	
CONTRACT ID.	
PROJECT NO.	
BRIDGE NO.: A20971	

DATE	DESCRIPTION

IF A SEAL IS PRESENT ON THIS SHEET IT HAS BEEN ELECTRONICALLY SEALED AND DATED.

MISSOURI HIGHWAYS AND TRANSPORTATION COMMISSION
105 WEST CAPITOL
JEFFERSON CITY, MO 65102
1-888-ASK-MODOT (1-888-275-6636)

Detailed Apr. 2016
Checked May 2016

Note: This drawing is not to scale. Follow dimensions.

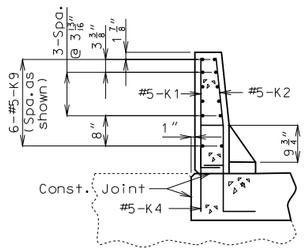

SECTION A-A

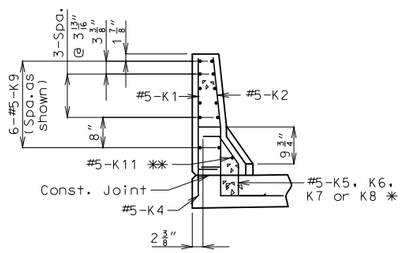

SECTION B-B

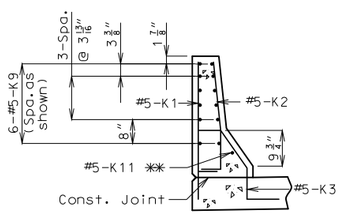

SECTION C-C

(#5-R6 Bars not shown for clarity)

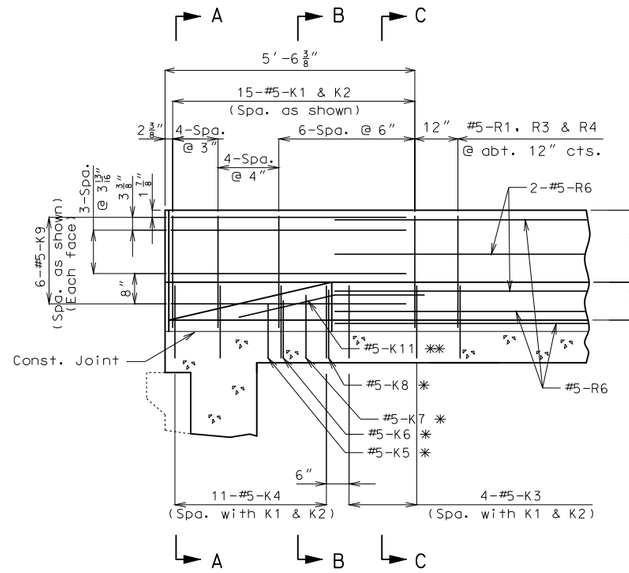

ELEVATION

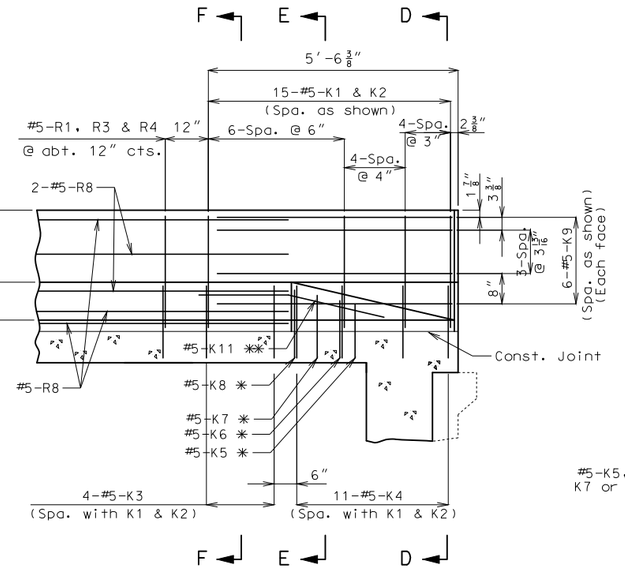

ELEVATION

✱ Spaced with #5-K4 bars with bottom leg at same elevation as the bottom leg of K4 bars.

✱✱ Fit bar to follow transition face of curb.

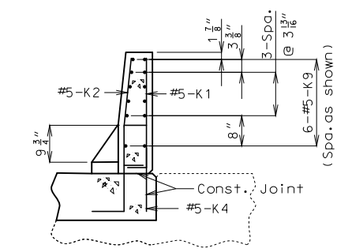

SECTION D-D

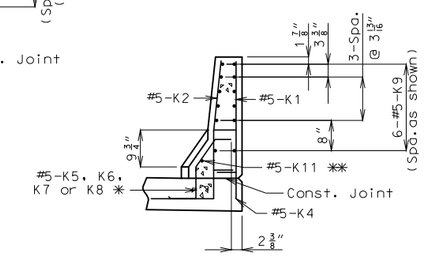

SECTION E-E

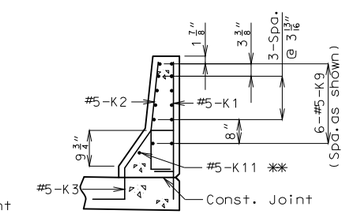

SECTION F-F

(#5-R8 Bars not shown for clarity)

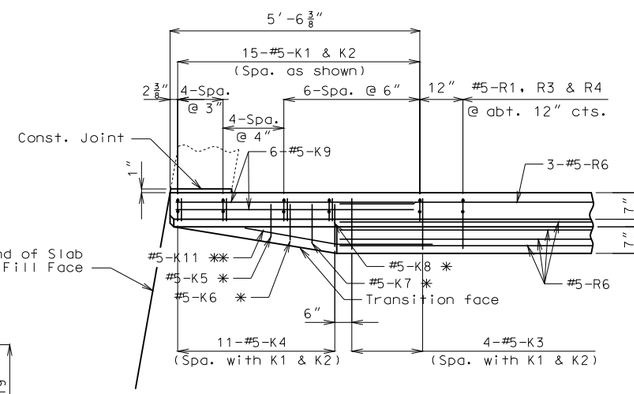

PLAN

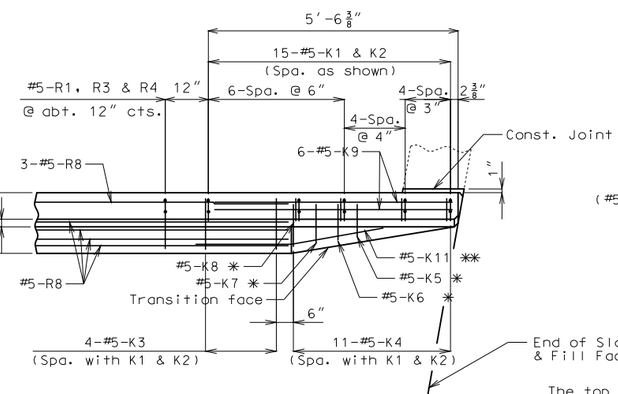

PLAN

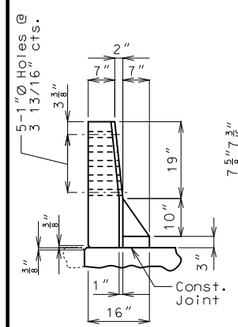

PART ELEVATION G-G

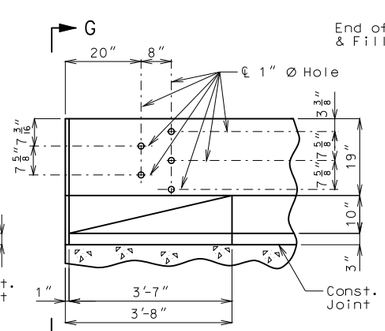

PART ELEVATION

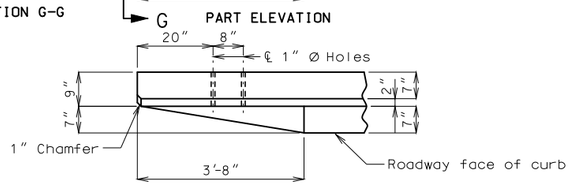

PART PLAN

DETAILS OF GUARD RAIL ATTACHMENT

NOTES: Use a minimum lap of 2'-11" between K9 and R6 or R8 bars.

Concrete traffic barrier delineators shall be placed on top of the safety barrier curb as shown on Missouri Standard Plans 617.10 and in accordance with Sec 617. Delineators on bridges with two-lane, two-way traffic shall have retroreflective sheeting on both sides. Concrete traffic barrier delineators will be considered completely covered by the contract unit price for Safety Barrier Curb.

DETAILS OF SAFETY BARRIER CURB AT END BENTS

(Left barrier curb shown, right barrier curb similar.)

The top two K9 bars shall be kept with position close to those shown in Sections A-A thru F-F

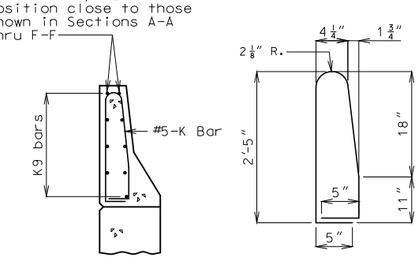

K1-K2 BAR PERMISSIBLE ALTERNATE SHAPE

(K3 or K4 thru K8 bars not shown for clarity)

The K1 and K2 bar combination may be furnished as one bar as shown, at the contractor's option.

Detailed Apr. 2016
Checked May 2016

Note: This drawing is not to scale. Follow dimensions.

STATE OF MISSOURI
ANOUSONE AROUNPRADITH
NUMBER PE-29317
PROFESSIONAL ENGINEER

THIS SHEET HAS BEEN SIGNED, SEALED AND DATED ELECTRONICALLY.

DATE PREPARED	8/4/2016
ROUTE	A
STATE	MO
DISTRICT	BR
SHEET NO.	5
COUNTY	CAMDEN
JOB NO.	J5S3147
CONTRACT ID.	
PROJECT NO.	
BRIDGE NO.	A20971

DESCRIPTION

DATE

MISSOURI HIGHWAYS AND TRANSPORTATION COMMISSION

105 WEST CAPITOL
JEFFERSON CITY, MO 65102
1-888-ASK-MODOT (1-888-275-6636)

IF A SEAL IS PRESENT ON THIS SHEET IT HAS BEEN ELECTRONICALLY SEALED AND DATED.

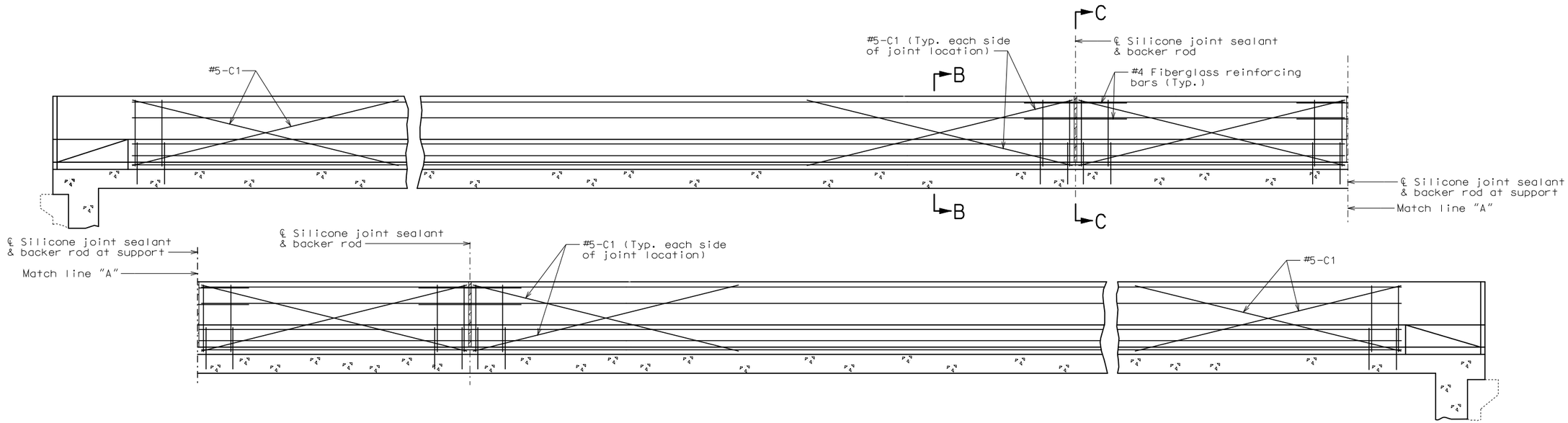

TYPICAL SECTION NEAR LEFT SAFETY BARRIER CURB AT SUPPORT LOCATIONS
(OPTIONAL SLIP-FORM BRIDGE SAFETY BARRIER CURB)

Notes:

Top of safety barrier curb shall be built parallel to grade with barrier curb joints normal to grade.

Payment for all concrete and reinforcement, complete in place, will be considered completely covered by the contract unit price for Safety Barrier Curb per linear foot.

Concrete in the safety barrier curb shall be Class B-1.

Measurement of safety barrier curb is to the nearest linear foot for each structure, measured along the outside top of slab from end of slab to end of slab.

Notes:

Joint sealant and backer rods shall be used on all slip-form barrier curbs instead of joint filler and shall be in accordance with Sec 717 for silicone joint sealant for saw cut and formed joints.

C Bars (Slip-form option only) shall be used in addition to cast-in-place conventional forming reinforcement for bridge safety barrier curb.

For Slip-Form option, all sides of the safety barrier curb shall have a vertically broomed finish and the curb top shall have a transversely broomed finish.

Concrete traffic barrier delineators shall be placed on top of the safety barrier curb as shown on Missouri Standard Plans 617.10 and in accordance with Sec 617. Concrete traffic barrier delineators will be considered completely covered by the contract unit price for Safety Barrier Curb.

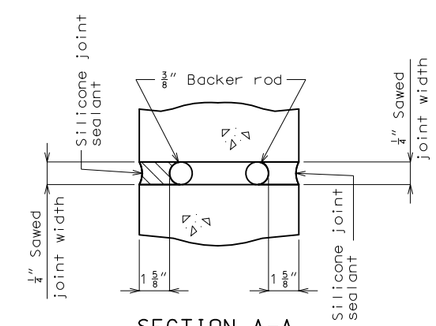

SECTION A-A

Note:

Cost of silicone joint sealant and backer rod, complete in place, will be considered completely covered by the contract unit price for Safety Barrier Curb.

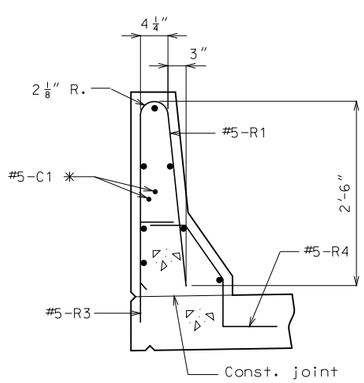

PART SECTION B-B

✳ Each side of joint location.

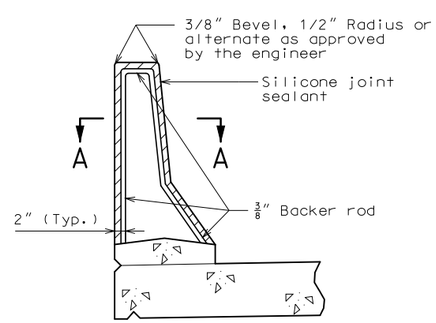

SECTION THRU JOINT

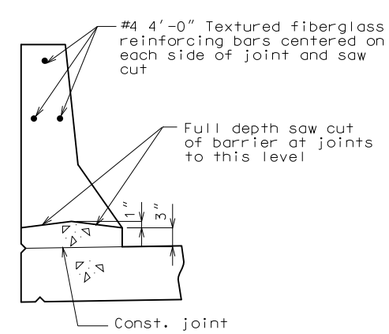

PART SECTION C-C

OPTIONAL SLIP-FORM BRIDGE SAFETY BARRIER CURB

(Left barrier curb shown, right barrier curb similar.)

Detailed Apr. 2016
Checked May 2016

Note: This drawing is not to scale. Follow dimensions.

STATE OF MISSOURI
ANOUSONE AROUNPRADITH
NUMBER PE-29317
PROFESSIONAL ENGINEER

THIS SHEET HAS BEEN SIGNED, SEALED AND DATED ELECTRONICALLY.

DATE PREPARED	8/4/2016
ROUTE	A
STATE	MO
DISTRICT	BR
SHEET NO.	6
COUNTY	CAMDEN
JOB NO.	J5S3147
CONTRACT ID.	
PROJECT NO.	
BRIDGE NO.	A20971

DATE	DESCRIPTION

MISSOURI HIGHWAYS AND TRANSPORTATION COMMISSION
105 WEST CAPITOL
JEFFERSON CITY, MO 65102
1-888-ASK-MODOT (1-888-275-6636)

IF A SEAL IS PRESENT ON THIS SHEET IT HAS BEEN ELECTRONICALLY SEALED AND DATED.

BILL OF REINFORCING STEEL

NO. REQ'D.	MARK NO. SIZE	MARK NO. MARK	LOCATION	EPOXY (E)	SHAPE NO.	STIRRUP (S)	SUBSTR. (X)	VARIES (V)	NO. EACH	B FT. IN.	C FT. IN.	D FT. IN.	E FT. IN.	F FT. IN.	H FT. IN.	K FT. IN.	NOMINAL LENGTH FT. IN.	ACTUAL LENGTH FT. IN.	WEIGHT LBS.
			END BENT NO.																
			1 & NO. 4																
6		6 H10	DIAPHRAGM	E	20					29 5.000							29 5	29 5	265
6		6 H11	DIAPHRAGM	E	23	S				15.000	2 5.000				14.500	3.875	3 8	3 7	32
6		6 H12	DIAPHRAGM	E	21	S				15.000	2 5.000				14.500	3.875	3 8	3 5	31
10		6 H13	DIAPHRAGM	E	20					29 7.000							29 7	29 7	444
			SLAB																
186		5 S1	SLAB	E	20					43 11.000							43 11	43 11	8520
44		6 S2	SLAB	E	20					29 3.000							29 3	29 3	1933
44		6 S3	SLAB	E	20					28 0.000							28 0	28 0	1850
472		5 S4	SLAB	E	20					28 5.000							28 5	28 5	13989
56		5 S5	SLAB	E	20			V	4	26 9.000							26 9	26 9	
			INCREMENT =							2 5.000							2 5	2 5	852
			22.500 INCH																
			BARRIER CURB																
60		5 K1	BARRIER CURB	E	19	S				2 5.000	5.125						2 10	2 9	172
60		5 K2	BARRIER CURB	E	14	S				5.125	11.125	18.000			2.000	17.875	2 10	2 9	172
16		5 K3	BARRIER CURB	E	27	S				16.625	5.125	12.000	7.125	12.000	9.875	6.875	4 5	4 2	70
44		5 K4	BARRIER CURB	E	10	S				12.000	16.625	6.000					4 3	4 0	184
4		5 K5	BARRIER CURB	E	27	S					4.375	6.750	7.125	12.000	5.500	4.000	2 6	2 4	10
4		5 K6	BARRIER CURB	E	27	S					4.375	7.875	7.125	12.000	6.500	4.500	2 7	2 5	10
4		5 K7	BARRIER CURB	E	27	S					4.375	9.625	7.125	12.000	7.875	5.500	2 9	2 7	11
4		5 K8	BARRIER CURB	E	27	S					4.375	11.250	7.125	12.000	9.250	6.500	2 11	2 9	11
48		5 K9	BARRIER CURB	E	20					6 7.000							6 7	6 7	330
4		5 K11	BARRIER CURB	E	8					2 2.125					2 2.000	2.375	4 4	4 4	18
240		5 R1	BARRIER CURB	E	26					2 6.000	4.250	2 6.125			2 6.000	3.000	5 2	5 2	1293
240		5 R3	BARRIER CURB	E	19	S				15.375	6.000						0 21	0 20	417
240		5 R4	BARRIER CURB	E	27	S					6.000	11.250	6.500	12.000	9.250	6.375	3 0	2 10	709
56		5 R5	BARRIER CURB	E	20					9 9.000							9 9	9 9	569
14		5 R6	BARRIER CURB	E	20					24 5.000							24 5	24 5	357
14		5 R7	BARRIER CURB	E	20					27 8.000							27 8	27 8	404
14		5 R8	BARRIER CURB	E	20					24 11.000							24 11	24 11	364
40		5 C1	SLIP FORM	E	20					10 0.000							10 0	10 0	417
			TOTALS																
	5			E															28879
	6			E															4555
			TOTAL																0
			TOTAL	E															33434
			Slab on																
			Girder																
	5			E															23361
	6			E															4555
			TOTAL																27916

BILL OF REINFORCING STEEL

NO. REQ'D.	MARK NO. SIZE	MARK NO. MARK	LOCATION	EPOXY (E)	SHAPE NO.	STIRRUP (S)	SUBSTR. (X)	VARIES (V)	NO. EACH	B FT. IN.	C FT. IN.	D FT. IN.	E FT. IN.	F FT. IN.	H FT. IN.	K FT. IN.	NOMINAL LENGTH FT. IN.	ACTUAL LENGTH FT. IN.	WEIGHT LBS.
			Safety																
			Barrier																
			Curb																
	5			E															5101
			TOTAL																5101
			Slip Form																
			Option																
	5			E															417
			TOTAL																417

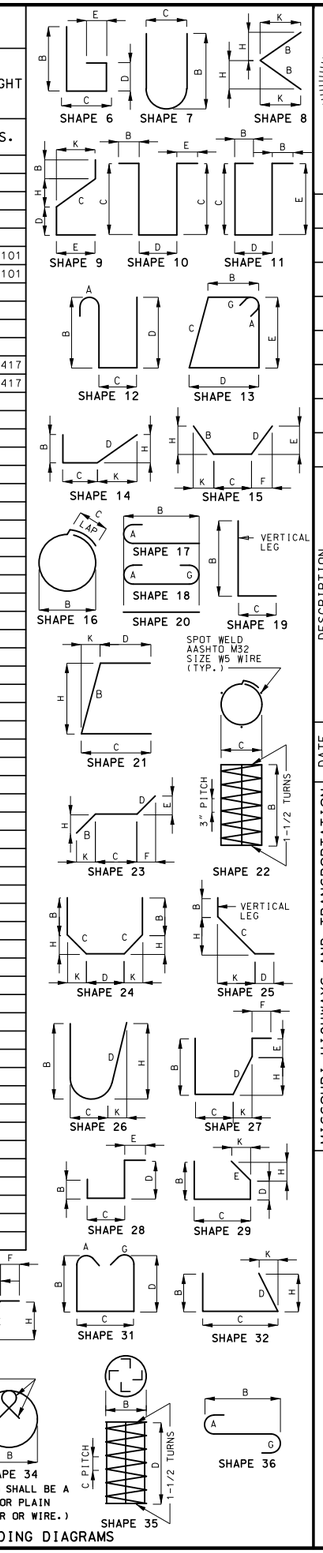

STATE OF MISSOURI
ANOUSONE AROUNPRADITH
NUMBER PE-29317
PROFESSIONAL ENGINEER

THIS SHEET HAS BEEN SIGNED, SEALED AND DATED ELECTRONICALLY.

DATE PREPARED	8/4/2016
ROUTE	A
STATE	MO
DISTRICT	BR
SHEET NO.	7
COUNTY	CAMDEN
JOB NO.	J5S3147
CONTRACT ID.	
PROJECT NO.	
BRIDGE NO.	A20971

DESCRIPTION

DATE

MISSOURI HIGHWAYS AND TRANSPORTATION COMMISSION

105 WEST CAPITOL
JEFFERSON CITY, MO 65102
1-888-ASK-MODOT (1-888-275-6636)

IF A SEAL IS PRESENT ON THIS SHEET IT HAS BEEN ELECTRONICALLY SEALED AND DATED.

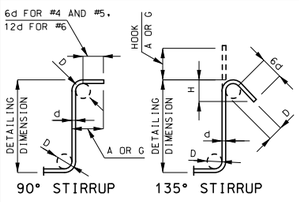

STIRRUP HOOK DIMENSIONS				
GRADES 40 - 50 - 60 KSI				
BAR SIZE	D (IN.)	90° HOOK	135° HOOK	
		HOOK A OR G	HOOK A OR G	APPROX. H
#4	2"	4 1/2"	4 1/2"	3"
#5	2 1/2"	6"	5 1/2"	3 3/4"
#6	4 1/2"	12"	8"	4 1/2"

NOTE: UNLESS OTHERWISE NOTED, DIAMETER "D" IS THE SAME FOR ALL BENDS AND HOOKS ON A BAR.

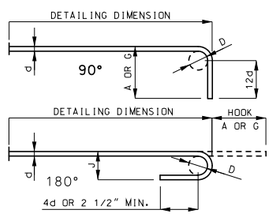

END HOOK DIMENSIONS				
BAR SIZE	D (IN.)	ALL GRADES		
		180° HOOKS		90° HOOKS
		A OR G	J	A OR G
#3	2 1/4"	5"	3"	6"
#4	3"	6"	4"	8"
#5	3 3/4"	7"	5"	10"
#6	4 1/2"	8"	6"	12"
#7	5 1/4"	10"	7"	14"
#8	6"	11"	8"	16"
#9	9 1/2"	15"	11 3/4"	19"
#10	10 3/4"	17"	13 1/4"	22"
#11	12"	19"	14 3/4"	2'-0"
#14	18 1/4"	2'-3"	21 3/4"	2'-7"

NOTE:
ALL STANDARD HOOKS AND BENDS OTHER THAN 180 DEGREE ARE TO BE BENT WITH SAME PROCEDURE AS FOR 90 DEGREE STANDARD HOOKS.
HOOKS AND BENDS SHALL BE IN ACCORDANCE WITH THE PROCEDURES AS SHOWN ON THIS SHEET.
E = EPOXY COATED REINFORCEMENT.
S = STIRRUP.
X = BAR IS INCLUDED IN SUBSTRUCTURE QUANTITIES.
V = BAR DIMENSIONS VARY IN EQUAL INCREMENTS BETWEEN DIMENSIONS SHOWN ON THIS LINE AND THE FOLLOWING LINE.
NO. EA. = NUMBER OF BARS OF EACH LENGTH.
NOMINAL LENGTHS ARE BASED ON OUT TO OUT DIMENSIONS SHOWN IN BENDING DIAGRAMS AND ARE LISTED FOR FABRICATORS USE. (NEAREST INCH)
ACTUAL LENGTHS ARE MEASURED ALONG CENTERLINE BAR TO THE NEAREST INCH.
PAYWEIGHTS ARE BASED ON ACTUAL LENGTHS.
FOUR ANGLE OR CHANNEL SPACERS ARE REQUIRED FOR EACH COLUMN SPIRAL. SPACERS ARE TO BE PLACED ON INSIDE OF SPIRALS. LENGTH AND WEIGHT OF COLUMN SPIRALS DO NOT INCLUDE SPLICES OR SPACERS.
REINFORCING STEEL (GRADE 60) FY = 60,000 PSI.

Detailed May 2016
Checked May 2016

Note: This drawing is not to scale. Follow dimensions.

MISSOURI STATE HIGHWAY DEPARTMENT

FED. ROAD DIST. NO.	STATE	FED. AID PROJ. NO.	FISCAL YEAR	SHEET NO.	TOTAL SHEETS
5	MO.		19	28	

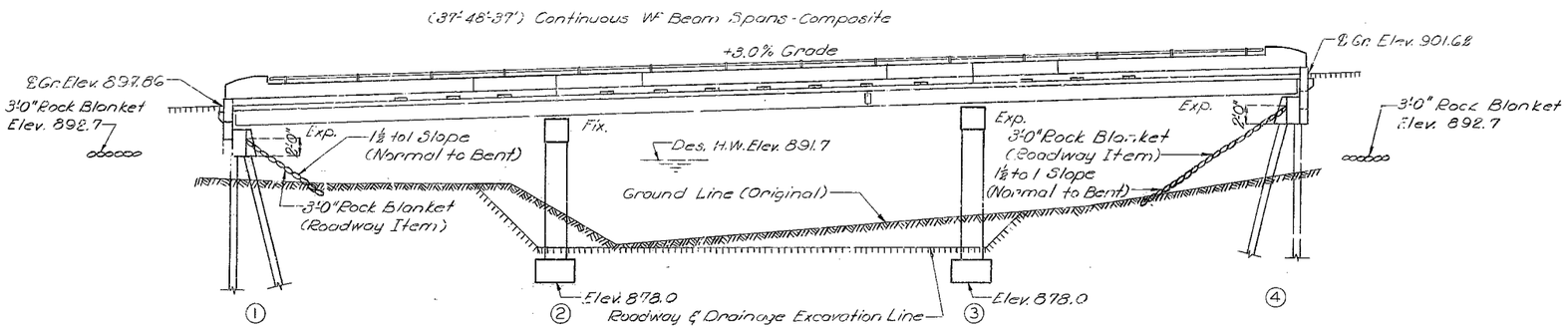

GENERAL ELEVATION

Note: Roadway fill (full roadway width) shall be placed up to elevation of bottom of concrete beam in front of and not less than 25'-0" in back of End Bent No. 4 before steel piles are driven.

GENERAL NOTES:

Design Specifications: A.A.S.H.O. - 1965

Design Loading:

H 15-44 15 #/sq. ft. Future Wearing Surface
Earth 120 # Equivalent Fluid Pressure 30 #
Fatigue A.W.S. D2.0-66 Formula 5b

Design Unit Stresses:

Class B Concrete (substructure) f_c = 1,200 psi
Class B1 Concrete (superstructure) f_c = 1,600 psi
Reinforcing Steel f_s = 20,000 psi
Structural Steel (A.S.T.M. A36-66) f_s = 20,000 psi
Steel Pile (A.S.T.M. A36-66) f_b = 6,000

Surface Seal:

Superstructure deck to be surface sealed.

Fabricated Steel:

Field connections, High Strength Bolts 3/4" ϕ, holes 13/16" ϕ except as noted.

PILE & FOOTING DATA					
BENT NO.		1	2	3	4
BEARING PILE	Pile Type and Size	10 BP42			10 BP42
	Number	4			4
	Approximate Length Ft.	15			15
	Design Bearing Tons	29			29
	Hammer Energy req'd. Ft. Lbs.	7,100			7,100
SPREAD FOOTINGS	Foundation Material		Rock	Rock	
	Design Bearing Tons / Sq. Ft.		6.1	6.1	

Minimum energy requirement of hammer based on plan length and design bearing value of piles. Increase by the factor (W+w)/2W when the weight of the ram (W) is less than the weight of the pile (w).
All pile shall be driven to practical refusal.

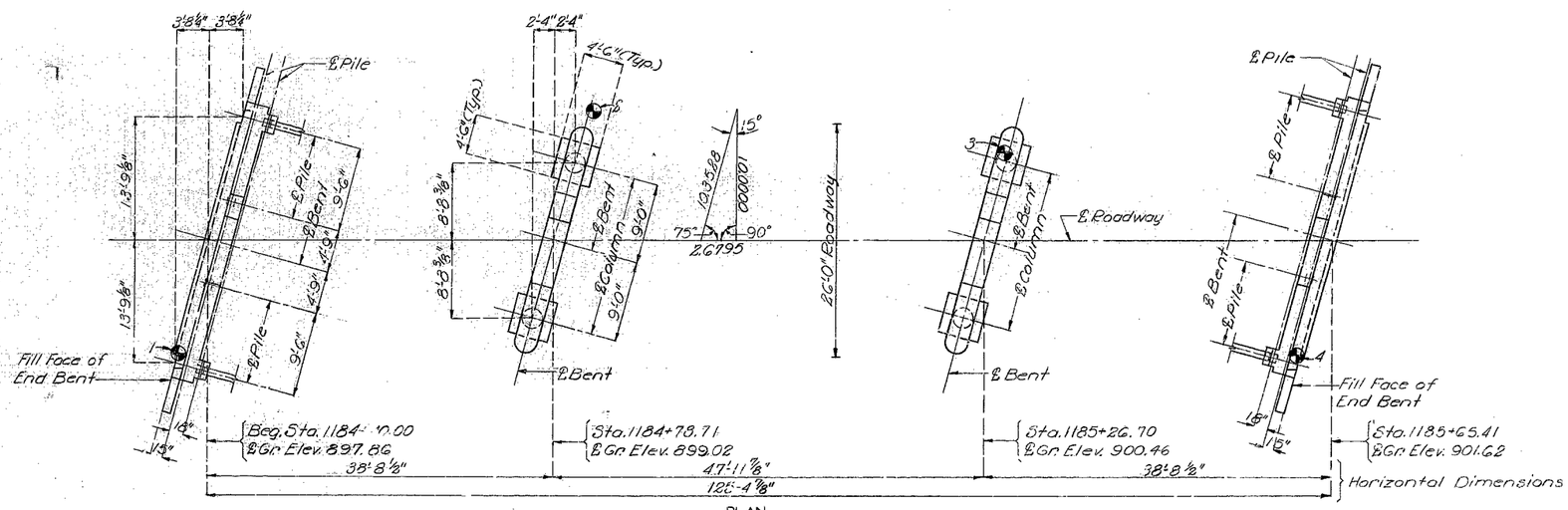

PLAN

Note: "⊕" indicates location of borings. See sheet 2 of 8 for Boring Data.

ESTIMATED QUANTITIES				
ITEM		SUBSTR.	SUPERSTR.	TOTAL
Class 1 Excavation for Structures	Cu. Yd.	30		30
Steel Piles in Place (10")	Lin. Ft.	120		120
Class B Concrete	Cu. Yd.	517.0		517.0
Class B1 Concrete	Cu. Yd.		98.5	98.5
Reinforcing Steel	Lb.	7610	26,510	34,120
Fabricated Structural Carbon Steel	Lb.		38,150	38,150
Bridge Rail (Single tube type)	Lin. Ft.		230	230

Note: No payment for excavation will be allowed at End Bents No. 1 & 4.

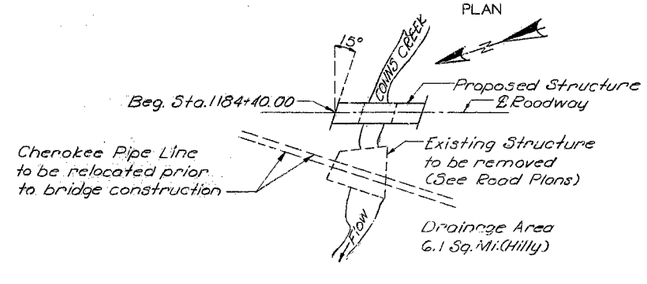

LOCATION SKETCH

B.M. Elev. 889.45 - Boot Spike in 24" Sycamore 8' Rt. Sta. 1185+58 U.S.G.S. Datum.

BRIDGE OVER CONNS CREEK

STATE ROAD FROM FREEDOM SOUTHEAST TO RICHLAND

ABOUT 2.5 MILES N.W. OF RICHLAND

PROJECT NO. S-1064(2) SA **STA.** 1184+40.00

CAMDEN **COUNTY**

SUBMITTED BY D. B. Jenkins BRIDGE ENGINEER DATE 4/11/67

APPROVED BY M. G. Snider CHIEF ENGINEER DATE 4/11/67

STD. 54.00

A-2097

DESIGNED SEPT. 1966 BY STUTTE
DETAILED DEC. 1966 BY MORLOCK
CHECKED JAN. 1967 BY BRYNIARSKI

Note: This drawing is not to scale. Follow dimensions.

Sheet No. 1 of 8.

MISSOURI STATE HIGHWAY DEPARTMENT

FED. ROAD DIST. NO.	STATE	FED. AID PROJ. NO.	FISCAL YEAR	SHEET NO.	TOTAL SHEETS
5	MO.		19	29	

COMPLETE BILL OF REINFORCING STEEL

NO.	SIZE	LENGTH	MARK	LOCATION
End Bents No. 1 & 4				
4	#6	31'-6"	H1	Beam
16	#6	33'-6"	H2	Beam
12	#6	5'-9"	H3	Wing
4	#6	29'-9"	H4	Backwall
2	#6	8'-6"	T1	Wing(Bt.#1)
2	#6	7'-6"	T2	Wing(Bt.#1)
2	#6	7'-6"	T3	Wing(Bt.#1)
2	#6	8'-3"	T4	Wing(Bt.#1)
2	#6	7'-9"	T5	Wing(Bt.#4)
2	#6	7'-6"	T6	Wing(Bt.#4)
2	#6	8'-6"	T7	Wing(Bt.#4)
2	#6	8'-6"	T8	Wing(Bt.#4)
62	#4	10'-9"	U1	Beam
20	#4	3'-3"	U2	Beam
4	#7	6'-3"	U3	Buttress
8	#7	14'-0"	U4	Buttress
120	#5	3'-0"	V1	Backwall
4	#4	6'-0"	V2	Wing
8	#4	8'-6"	V3	Wing
8	#6	2'-9"	V4	Buttress
Intermediate Bents No. 2 & 3				
36	#8	4'-0"	P1	Column
8	#8	25'-3"	H5	Beam
12	#10	23'-3"	H6	Beam
4	#6	23'-3"	H7	Beam
8	#8	10'-6"	H8	Beam
16	#7	6'-3"	H9	Beam
58	#8	8'-0"	P1	Column (Bt.#2 & Bt.#3)
64	#4	10'-3"	U5	Beam
20	#4	3'-6"	U7	Beam
4	#4	3'-3"	U8	Beam
18	#8	15'-3"	V5	Column(Bt.#2)
18	#8	16'-9"	V6	Column(Bt.#3)

BENDING SKETCHES & CUTTING DIAGRAMS

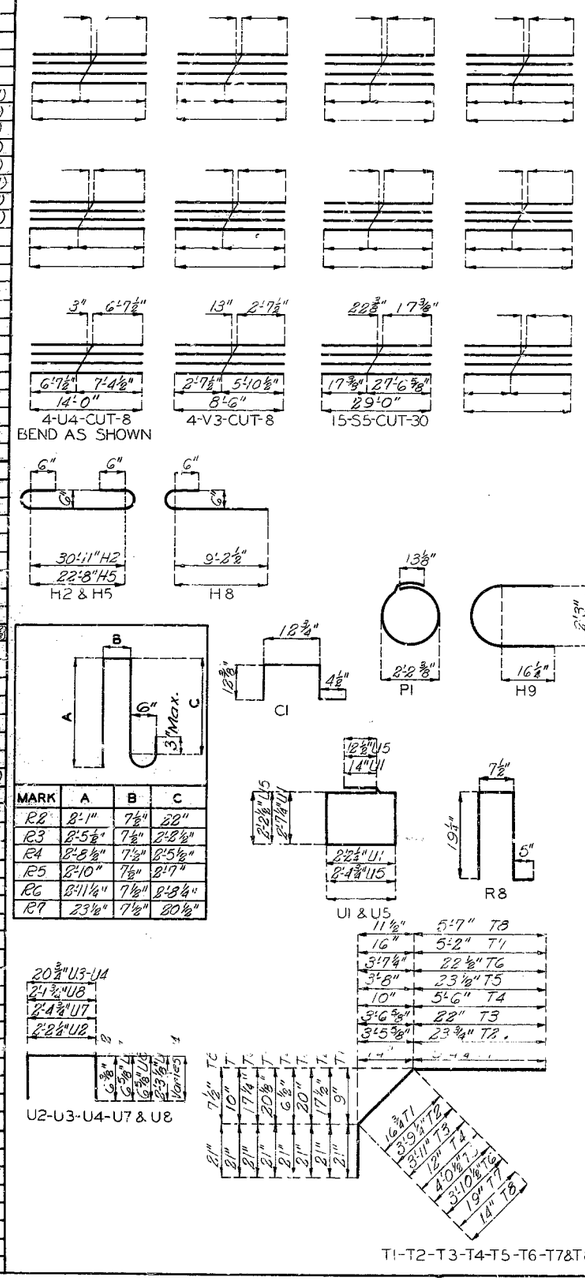

NO.	SIZE	LENGTH	MARK	LOCATION
Superstructure				
260	#5	3'-6"	C1	Curb
8	#6	20'-0"	C2	Curb
8	#6	24'-9"	C3	Curb
8	#6	20'-3"	C4	Curb
8	#5	4'-9"	R1	End Post
4	#5	5'-6"	R2	End Post
4	#5	6'-3"	R3	End Post
4	#5	6'-9"	R4	End Post
4	#5	7'-0"	R5	End Post
8	#5	7'-3"	R6	End Post
236	#5	5'-3"	R7	Parapet
26	#5	4'-3"	R8	Parapet
38	#5	9'-6"	R9	Parapet
8	#5	28'-3"	R10	Parapet
4	#5	28'-9"	R11	Parapet
4	#5	28'-0"	R12	Parapet
4	#5	28'-6"	R13	Parapet
4	#5	28'-3"	R14	Parapet
470	#5	28'-6"	S1	Slab
145	#4	26'-0"	S2	Slab
150	#5	26'-3"	S3	Slab
56	#4	16'-0"	S4	Slab
30	#5	29'-0"	S5	Slab
2	#4	29'-6"	S6	Slab

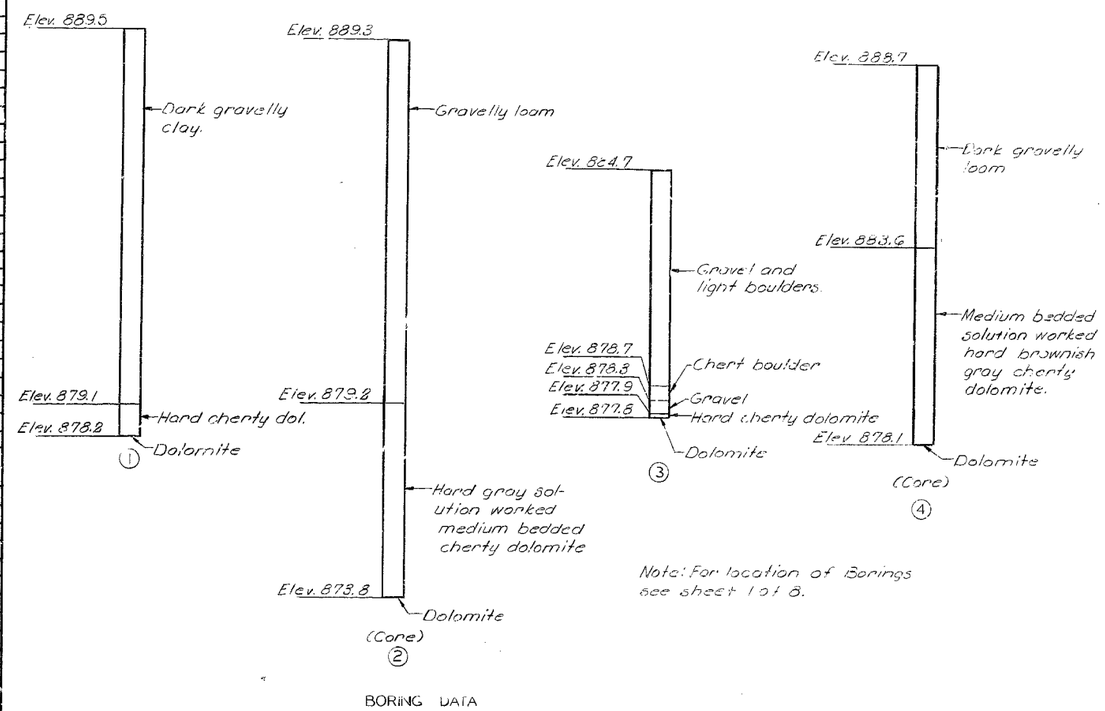

BORING DATA

BRIDGE OVER CONNS CREEK

STATE ROAD FROM FREEDOM SOUTHEAST TO RICHLAND

ABOUT 2.5 MILES N.W. OF RICHLAND

PROJECT NO. S-1064(2) SA **STA.** 1184+40.00

CAMDEN **COUNTY**

A-2097

172

No. 90.3	Revised
June 1961	Dec. 1964

DETAILED DEC. 1966 BY MORLOCK

CHECKED JAN. 1967 BY BRYNIARSKI

Note: This drawing is not to scale. Follow dimensions.

Sheet No. 2 of 3.

MISSOURI STATE HIGHWAY DEPARTMENT

FED. ROAD DIST. NO.	STATE	FED. AID PROJ. NO.	FISCAL YEAR	SHEET NO.	TOTAL SHEETS
5	MO.		19	30	

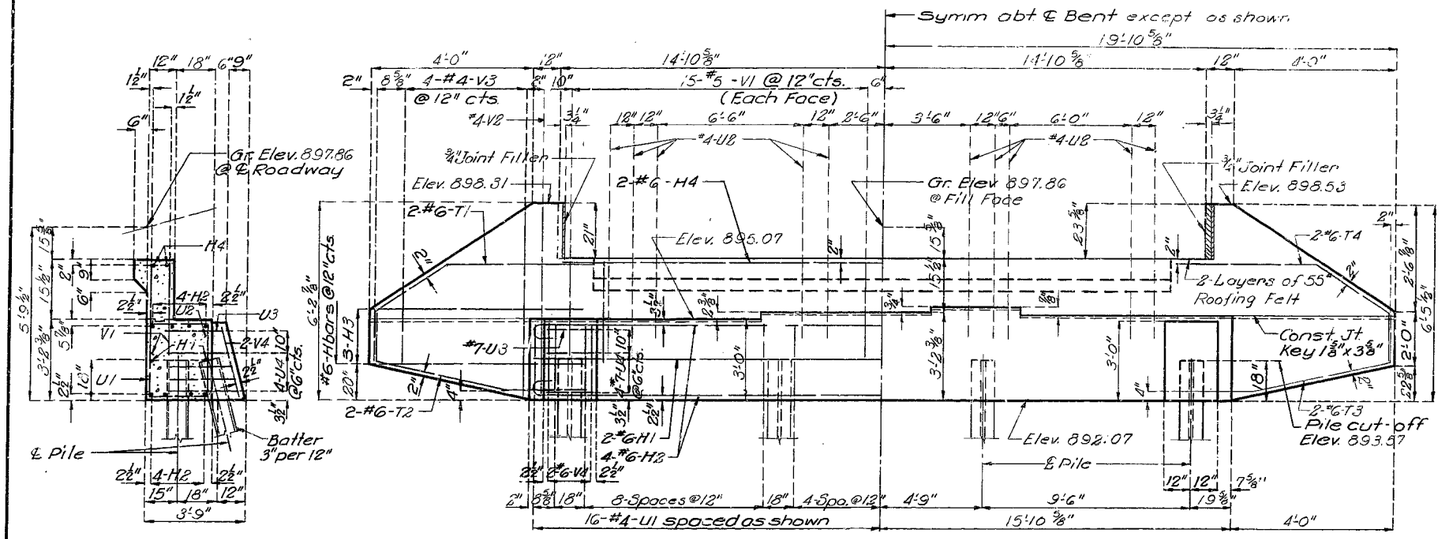

SECTION AT ℄

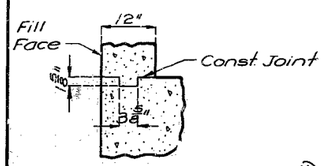

DETAIL OF KEYED CONST. JOINT

ELEVATION

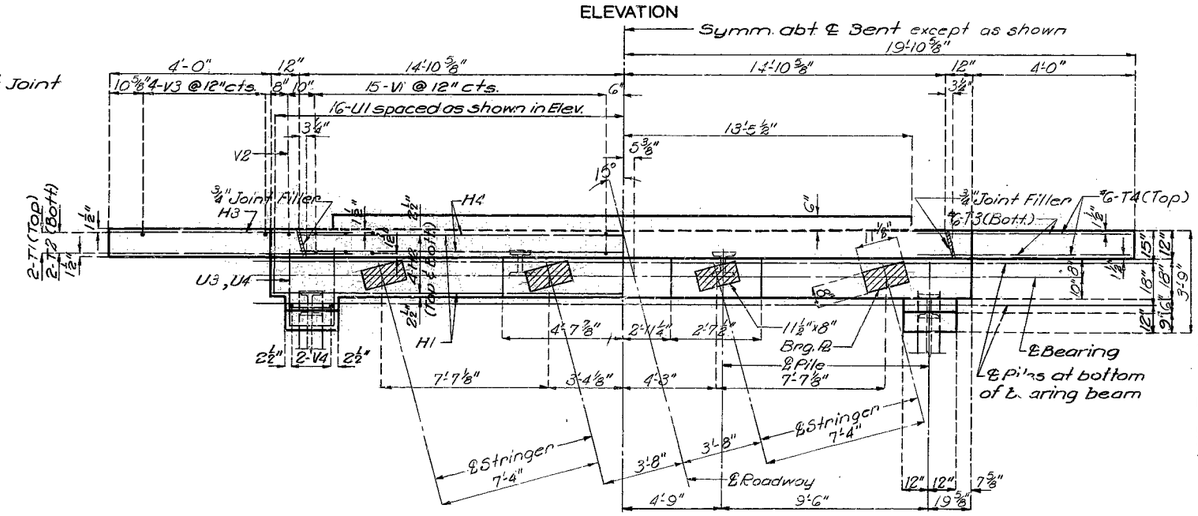

PLAN

DETAILS OF END BENT NO. 1

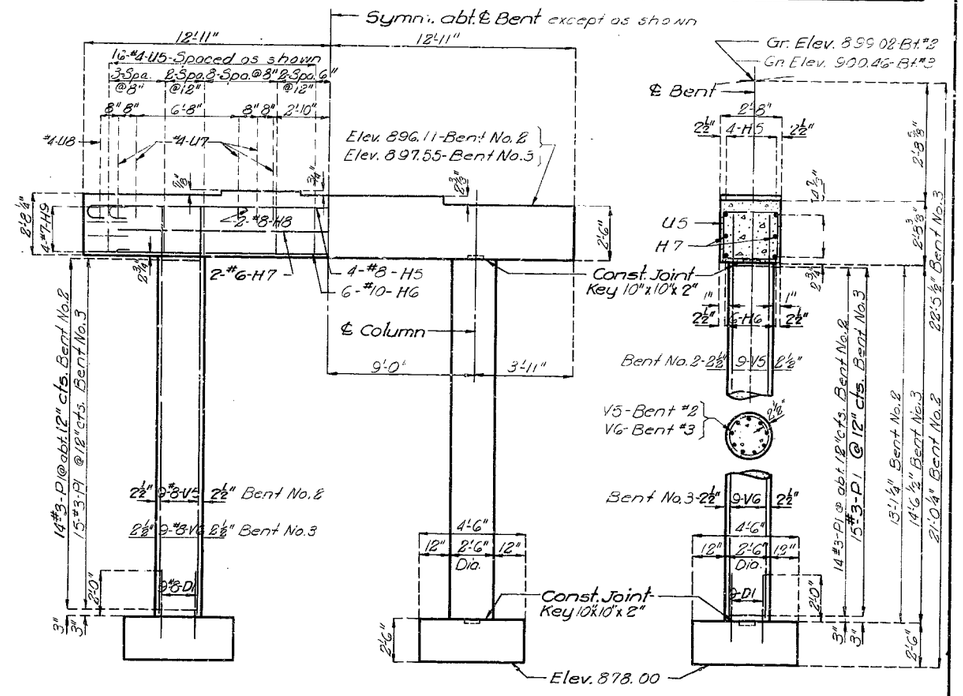

ELEVATION

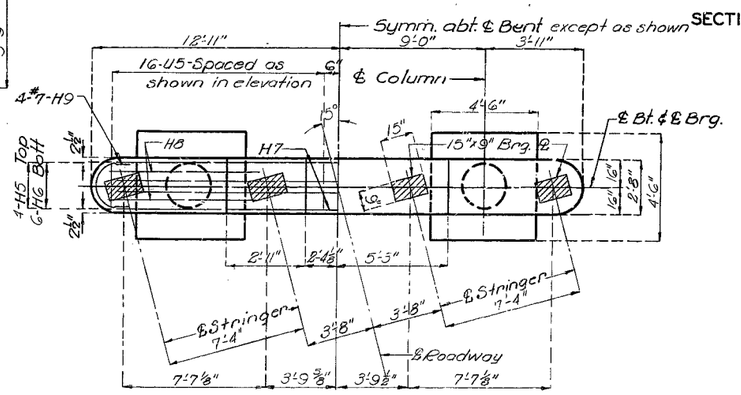

SECTION AT ℄

PLAN

DETAILS OF INTERMEDIATE BENTS NO. 2 & 3

Note: Fill at end bent No. 1 shall not be carried above bottom of beam and wings until adjacent superstructure span is in place.

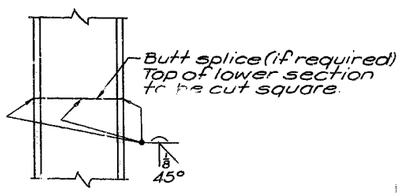

DETAIL OF STEEL PILE SPLICE

BRIDGE OVER CONNS CREEK

STATE ROAD FROM FREEDOM SOUTWEST TO RICHLAND

ABOUT 2.5 MILES N.W. OF RICHLAND

PROJECT NO. S-1064(2) SA **STA.** 1184+40.00

CAMDEN **COUNTY**

DETAILED DEC. 1966 BY MORLOCK

CHECKED JAN. 1967 BY BRYNIARSKI

No. 11.1 July 1965 Revised

Note: This drawing is not to scale. Follow dimensions.

Sheet No. 3 of 8.

A-2097

173

MISSOURI STATE HIGHWAY DEPARTMENT

FED. ROAD DIST. NO.	STATE	FED. AID PROJ. NO.	FISCAL YEAR	SHEET NO.	TOTAL SHEETS
5	MO.		19	31	

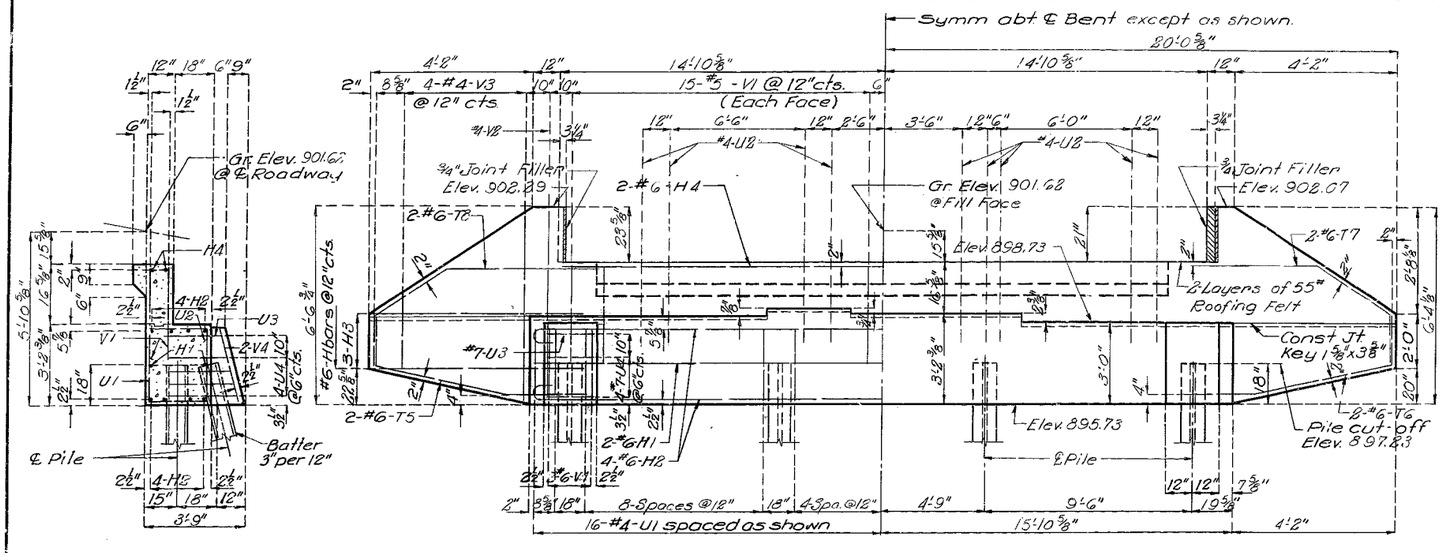

SECTION AT ℄

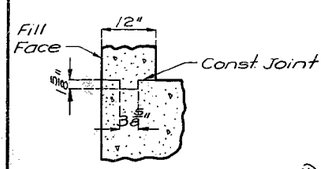

DETAIL OF KEYED CONST. JOINT

ELEVATION

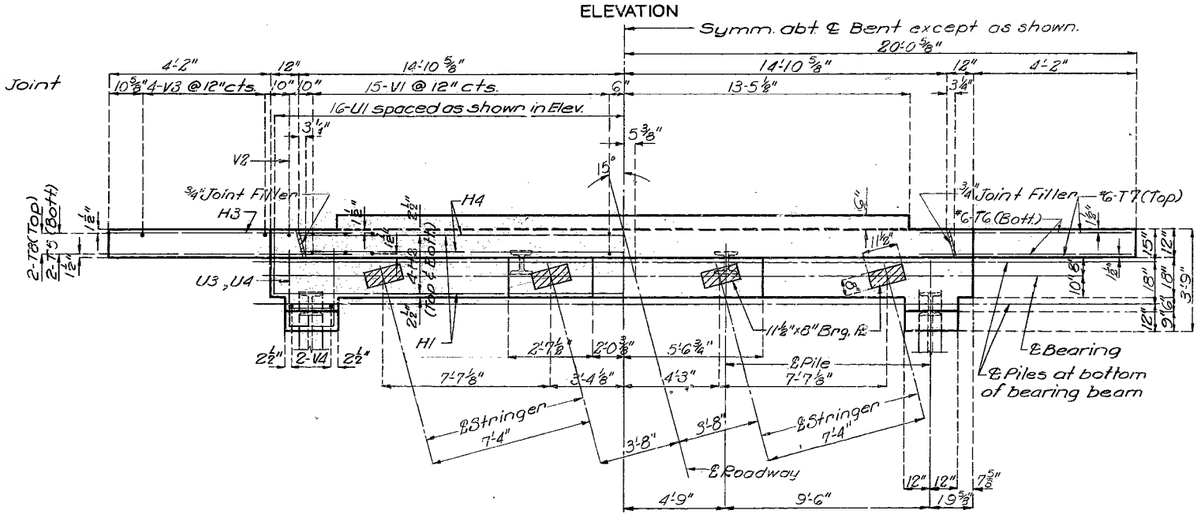

PLAN

DETAILS OF END BENT NO.4

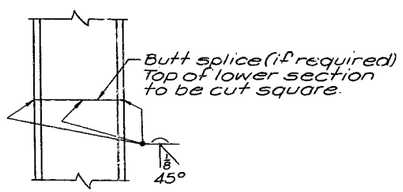

DETAIL OF STEEL PILE SPLICE

Note: Fill at end bent No. 4 shall not be carried above bottom of beam and wings until adjacent superstructure span is in place.

BRIDGE OVER CONNS CREEK

STATE ROAD FROM FREEDOM SOUTHEAST TO RICHLAND

ABOUT 2.5 MILES N.W. OF RICHLAND

PROJECT NO. S-1064(2) SA **STA.** 1184+40.00

CAMDEN **COUNTY**

A-2097

174

Revised July 1965 No. 81

DETAILED DEC. 1966 BY MORLOCK

CHECKED JAN. 1967 BY BRYNIARSKI

Note: This drawing is not to scale. Follow dimensions.

Sheet No. 4 of 8

MISSOURI STATE HIGHWAY DEPARTMENT

FED. ROAD DIST. NO.	STATE	FED. AID PROJ. NO	FISCAL YEAR	SHEET NO.	TOTAL SHEETS
5	MO.		19	32	

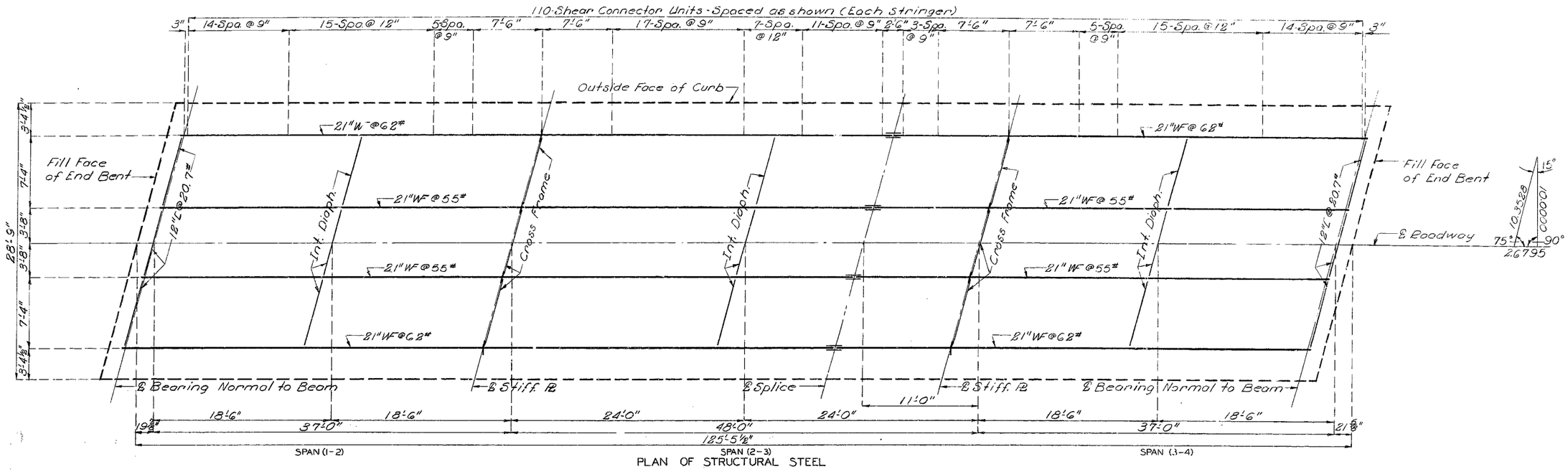

PLAN OF STRUCTURAL STEEL

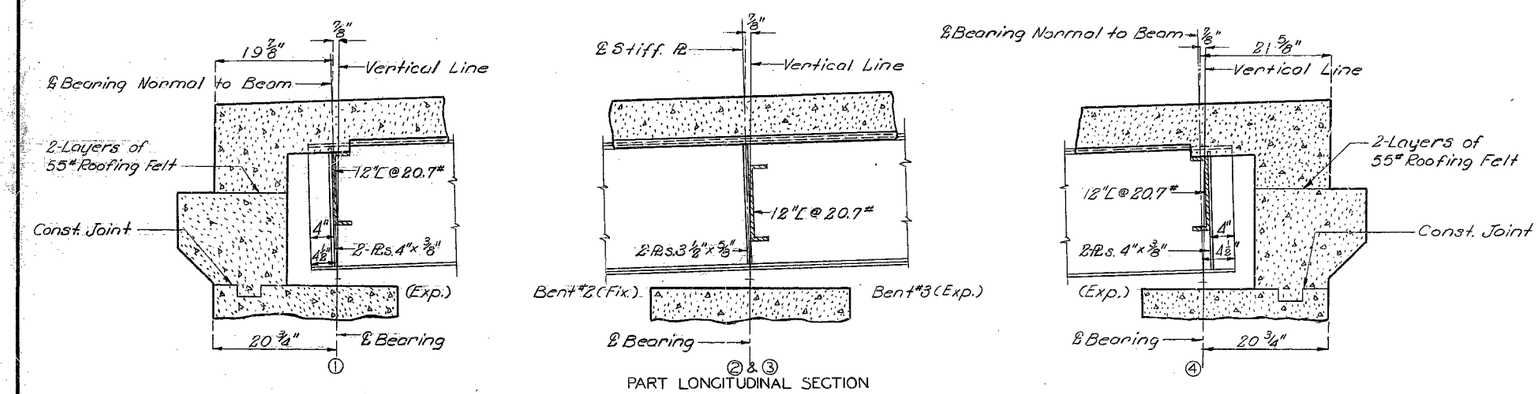

PART LONGITUDINAL SECTION

Note: Longitudinal dimensions shown are taken parallel to grade of crown of roadway.

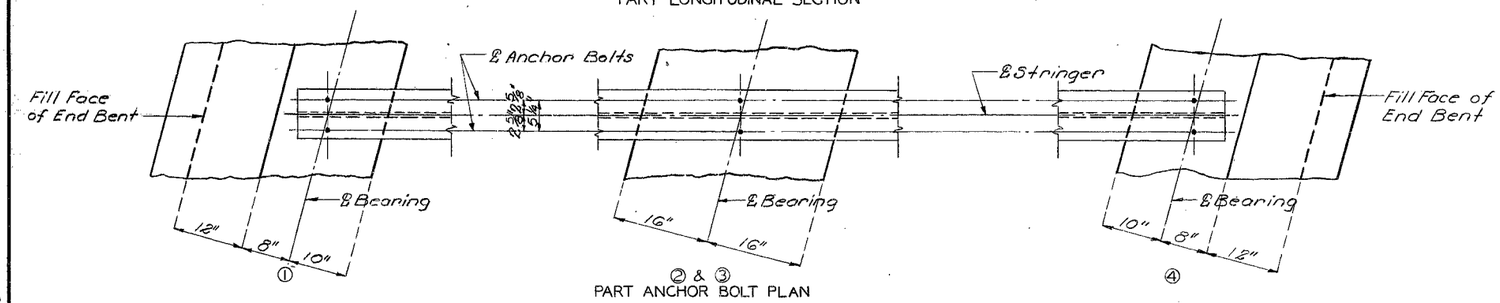

PART ANCHOR BOLT PLAN

BRIDGE OVER CONNS CREEK

STATE ROAD FROM FREEDOM SOUTHEAST TO RICHLAND

ABOUT 2.5 MILES N.W. OF RICHLAND

PROJECT NO. S-106-1(2) SA **STA.** 1184+40.00

CAMDEN **COUNTY**

A-2097

175

DETAILED DEC. 1966 BY MORLOCK

CHECKED JAN. 1967 BY BRYNIARSKI

Note: This drawing is not to scale. Follow dimensions.

Sheet No. 5 of 8.

MISSOURI STATE HIGHWAY DEPARTMENT

FED. ROAD DIST. NO.	STATE	FED. AID PROJ. NO.	FISCAL YEAR	SHEET NO.	TOTAL SHEETS
5	MO.		19	33	

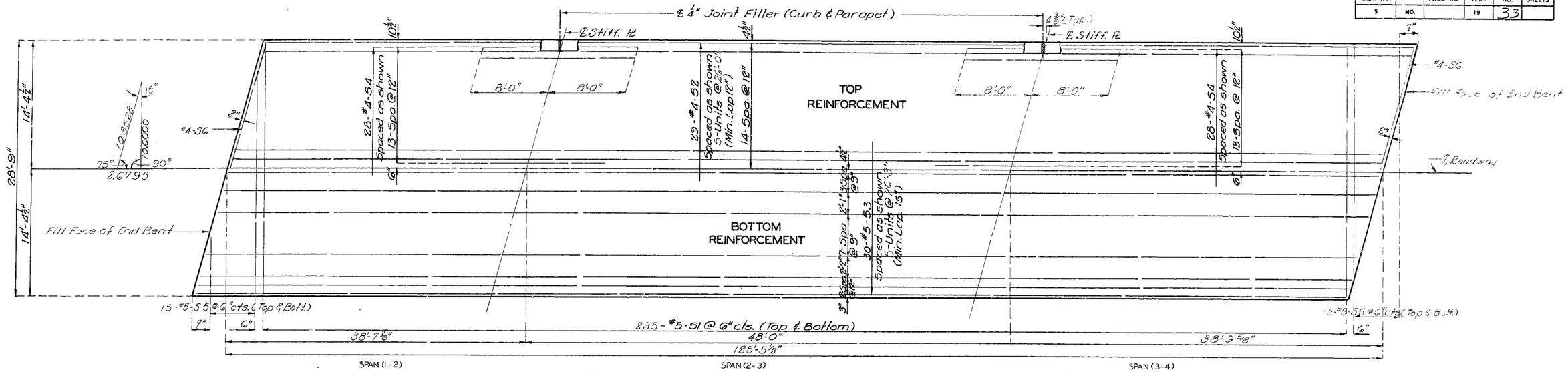

PLAN OF SLAB SHOWING REINFORCEMENT

Note: Longitudinal dimensions shown are taken parallel to grade at crown of roadway.

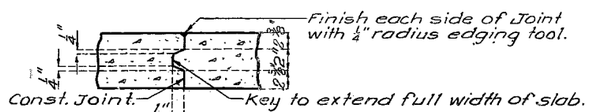

SECTION A-A

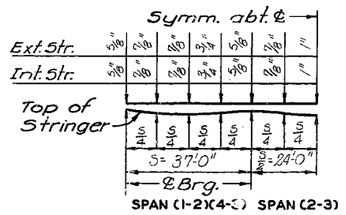

THEORETICAL SLAB HAUNCHING DIAGRAM

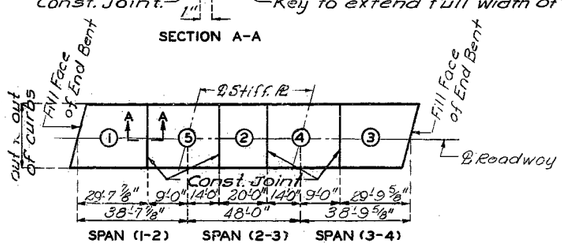

	Sequence of Pours				
	Direction				
Basic Sequence	1	2	3	4	5
	Either Direction				
Alternate "A" Pours	1	5+2		4+3	
	End to 5	1 to 4		2 to End	
Alternate "B" Pours	1+5+2		4+3		
	End to 4		2 to End		
Alternate "C" Pours	1+5+2+4+3				
	End to End				

Note: The contractor shall observe the basic pouring sequence and shall pour and satisfactorily finish the slab pours at a rate of not less than 12 cubic yards per hour. However, he may use one of the longer alternate pours if he elects to use an approved oscillating screed type, self propelled mechanical finishing machine and can demonstrate to the engineer that he can pour and satisfactorily finish the slab pours at a rate of not less than 25 cubic yards per hour. Finishing machine loads will not be permitted on concrete less than 48 hours old.

SLAB POURING SEQUENCE

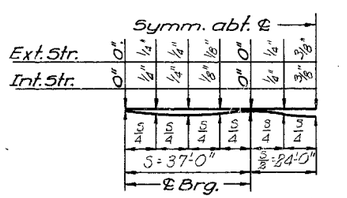

9 % Structural Steel

DEAD LOAD DEFLECTION

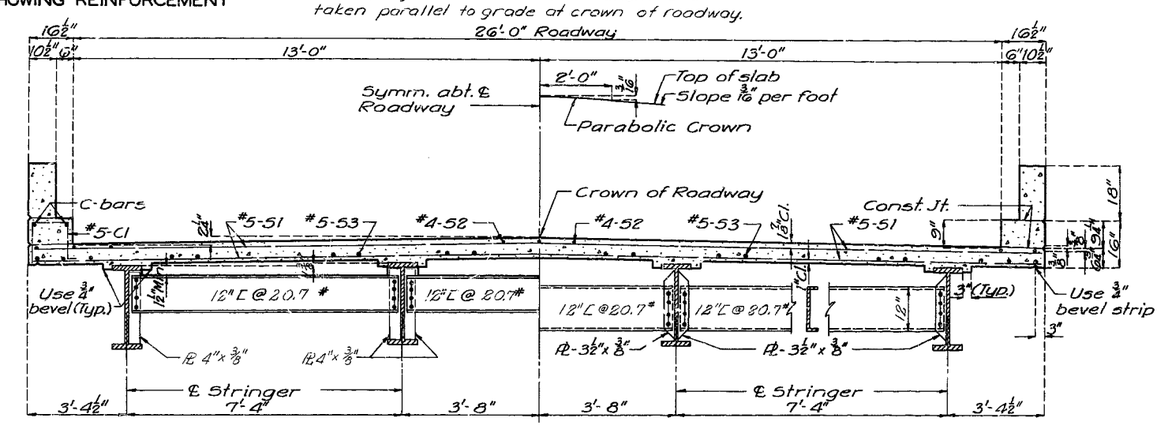

HALF SECTION NEAR END DIAPH.

HALF SECTION NEAR INT. DIAPH.

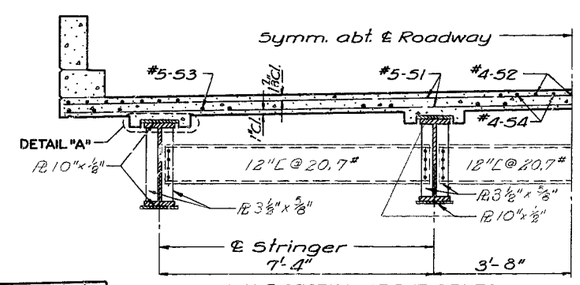

HALF SECTION AT INT. BENTS

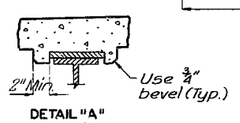

DETAIL "A"

Note: For details and reinforcement of curb and parapet not shown see sheet No. 8 of 8.

BRIDGE OVER CONNS CREEK

STATE ROAD FROM FREEDOM SOUTHEAST TO RICHLAND

ABOUT 2.5 MILES N.W. OF RICHLAND

PROJECT NO. S-1064(2) SA **STA.** 1184+40.00

CAMDEN **COUNTY**

DETAILED DEC. 1966 BY MORLOCK

CHECKED JAN. 1967 BY BRYNIARSKI

Note: This drawing is not to scale. Follow dimensions.

Sheet No. 6 of 8.

A-20971

No. 41261A	Revised
Oct. 1964	Dec. 1965

176

MISSOURI STATE HIGHWAY DEPARTMENT

FED. ROAD DIST. NO.	STATE	FED. AID PROJ. NO.	FISCAL YEAR	SHEET NO.	TOTAL SHEETS
5	MO.		19	34	

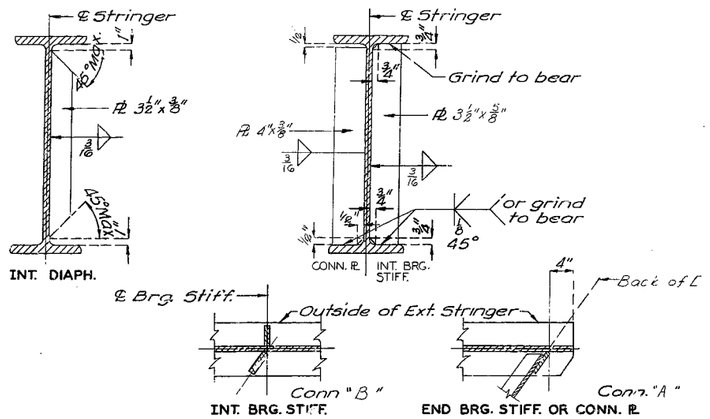

TYPICAL LOCATION DETAILS

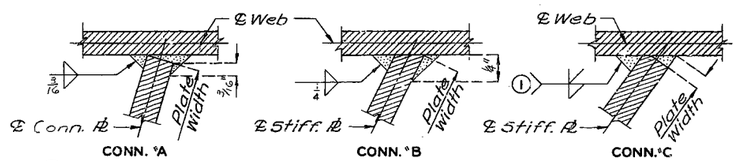

① Groove weld penetration = ⅜" min. Only welding procedures having good penetration will be permitted on groove welds.

WELDING DETAILS

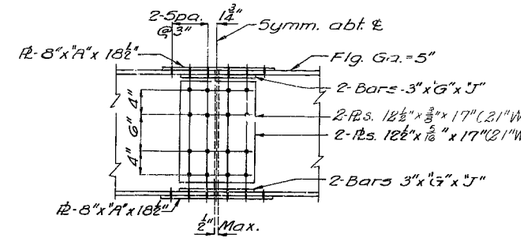

WF SIZE	"A"	"G"	"J"
21"WF@55# to 55#	⅜"	⅜"	12½"
21"WF@62# to 62#	7/16"	⅜"	12½"

Note: 15/16"ø reamed holes for ⅞"ø high strength bolts.

DETAIL OF 21" WF BEAM SPLICE

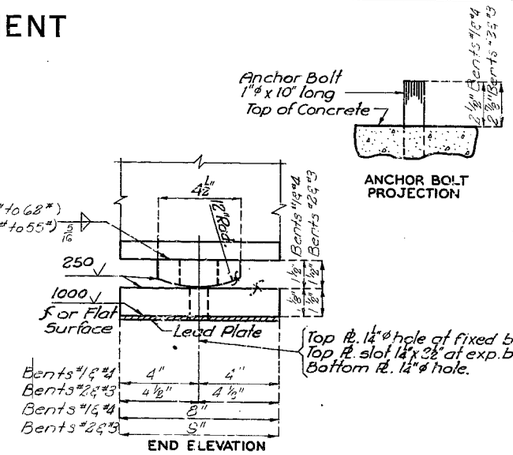

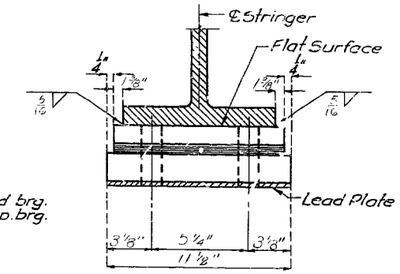

Required: 4 -Fixed Bearings - Bt. #2
12 -Expansion Bearings - Bts. #1&4
4 - Expansion Bearings - Bt. #3

TYPE "C" BEARINGS
(Estimated Weight 1020#)

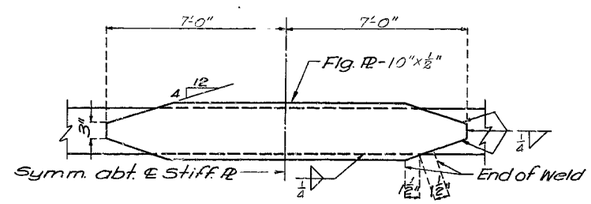

INT. BENTS NO. 2

DETAILS OF FLANGE PLATES – TOP & BOTTOM FLANGE

NOTES: TYPE "C" BEARINGS

Lead plates under bearings shall be approximately ⅜" thickness and weigh 8#/sq. ft. Cost of lead plates shall be included in price bid for other items. "Estimated weight" does not include weight of anchor bolts.

Where flat surface is indicated, tolerance shall be .003 in/in in any direction.

Anchor Bolts for Type "C" Bearings shall be 1"ø swedged bolts 10" long with no heads or nuts. Top of Anchor Bolts shall be set approximately ¼" below top of bearing.

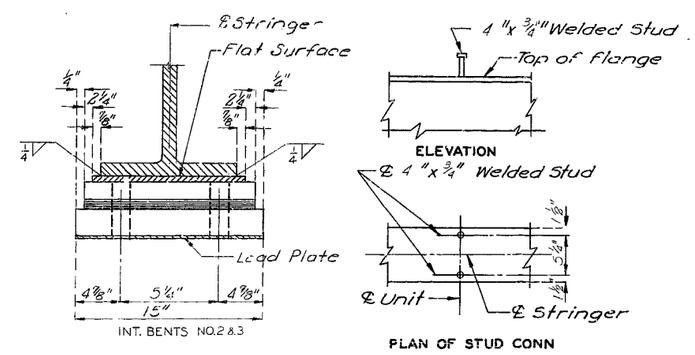

DETAILS OF SHEAR CONNECTORS

BRIDGE OVER CONNS CREEK

STATE ROAD FROM FREEDOM SOUTHEAST TO RICHLAND

ABOUT 2.5 MILES N.W. OF RICHLAND

PROJECT NO. S-1064(2) SA **STA.** 1184 + 40.00

CAMDEN **COUNTY**

A-2097

DETAILED DEC. 1966 BY MORLOCK
CHECKED JAN. 1967 BY BRYNIARSKI

Note: This drawing is not to scale. Follow dimensions.

Sheet No. 7 of 8.

MISSOURI STATE HIGHWAY DEPARTMENT

FED ROAD DIST. NO.	STATE	FED AID PROJ. NO.	FISCAL YEAR	SHEET NO.	TOTAL SHEETS
5	MO.		19	35	

GENERAL HANDRAIL NOTES:

All handrail posts shall be set normal to grade.

Aluminum tube handrail shall be bent to conform to vertical and horizontal alignment of parapet.

Aluminum washer shims between top of parapet and post base may be used for adjusting handrail alignment. Maximum thickness of shims to be 1/16". Where more fitting of post is required for proper alignment, concrete bearing areas shall be ground down.

All parts of handrail, except anchor bolts, nuts, washers, and set screws are to be of aluminum material.

The contract unit price per linear foot of "Bridge Rail" shall include furnishing and erecting the handrail complete with anchor bolts, shims and insulating compound.

All fillets 1/4" except as noted.

All drafts 3° except as noted.

Pipe rail to be fabricated in a minimum of two panel lengths.

Omit set screw on side adjacent to filled Joint in parapet and curb at all expansion posts.

Top of curbs and parapets to be built parallel to grade with curb and parapet Joints (except at end posts) normal to grade.

Concrete end posts to be vertical.

All exposed edges of end posts shall have 1/2" bevel. All exposed edges of curbs and parapets shall have 1/2" radius or 3/8" bevel unless otherwise noted.

If the contractor desires, he may use drive fit cast aluminum end caps in lieu of welded aluminum closure plates.

Integrally cast test coupons and a coat of clear lacquer specified in Std Spec. 56.2.4 and 56.3.5 respectively will not be required for these rail posts.

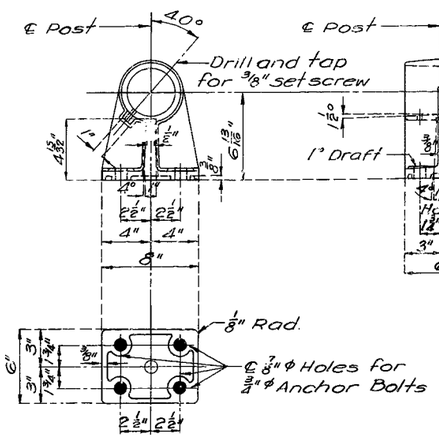

POST DETAILS

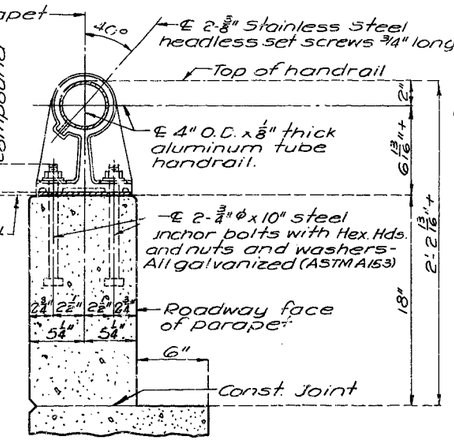

SECTION THRU HANDRAIL

SINGLE TUBE ALUMINUM RAILING

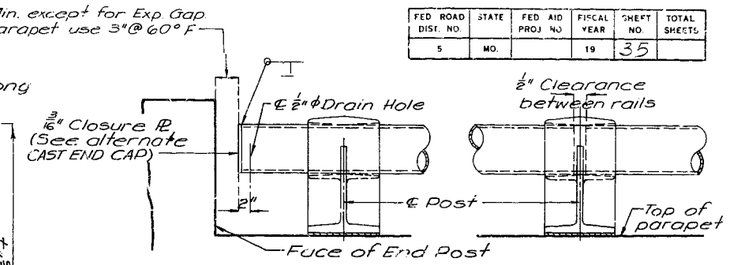

TYPICAL HANDRAIL DETAILS

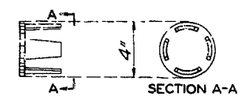

CAST END CAP
(Drive Fit Type)

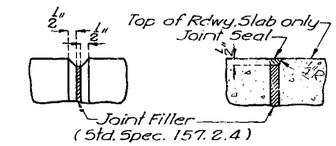

FILLED JOINT DETAILS

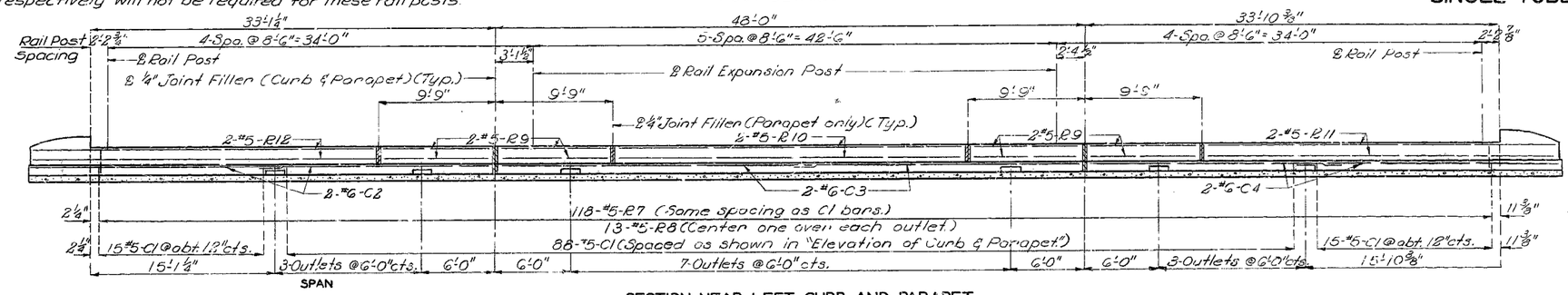

SECTION NEAR LEFT CURB AND PARAPET

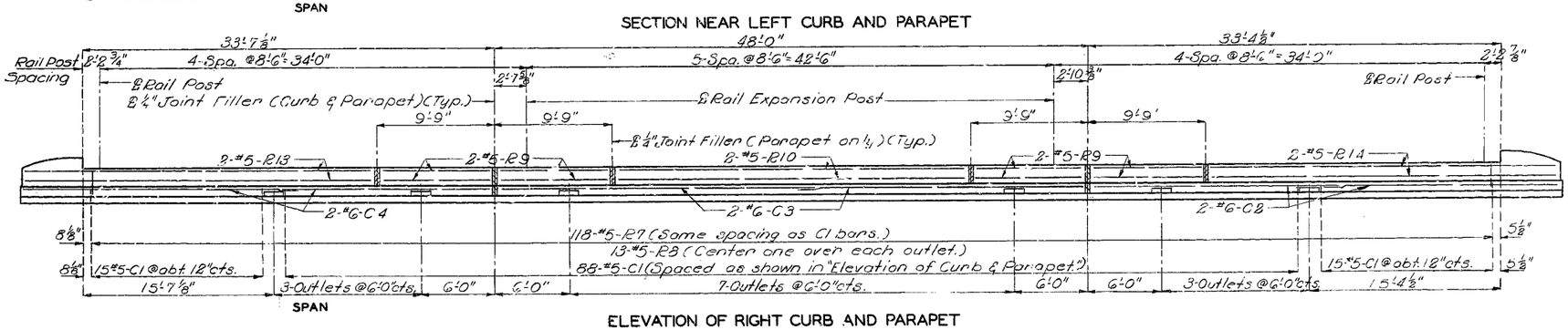

ELEVATION OF RIGHT CURB AND PARAPET

Note: Longitudinal dimensions shown are taken parallel to grade at top of parapet.

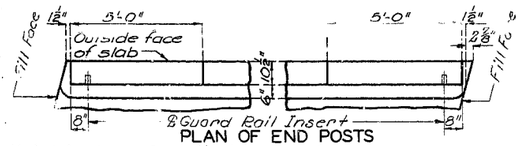

PLAN OF END POSTS

Note: Anchors for attaching guard rail shall be 3/4" threaded (Galv.) inserts having a Min. depth of 4" and filled with a plastic closing plug. Cost for furnishing & installing the insert & plug will be included in price bid for other items.

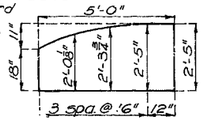

END POST ORDINATES

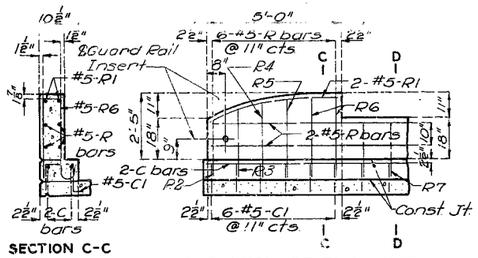

SECTION C-C

ELEVATION OF END POST

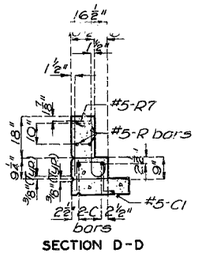

SECTION D-D

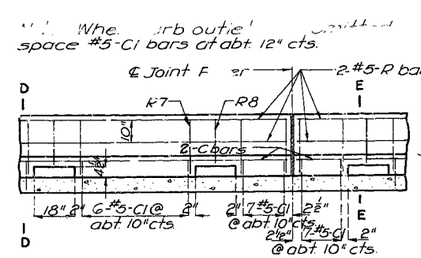

ELEVATION OF CURB & PARAPET

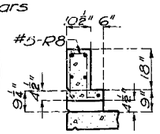

SECTION E-E

Note: For horizontal curb and parapet bars use a minimum lap of 15" for #5 and 18" for #6

Note: This drawing is not to scale. Follow dimensions.

Sheet No. 8 of 8.

BRIDGE OVER CONNS CREEK

STATE ROAD FROM FREEDOM SOUTHEAST TO RICHLAND

ABOUT 2.5 MILES N.W. OF RICHLAND

PROJECT NO. S-1064(2) SA **STA.** 1184+40.00

CAMDEN **COUNTY**

A-2097

STD. 1.5.2-SK.	REVISED
MAR. 1964	JULY 1966

DETAILED DEC. 1966 BY MORLOCK

CHECKED JAN. 1967 BY BRYNIARSKI

178

MISSOURI STATE HIGHWAY DEPARTMENT

FINAL PLANS

FED. ROAD DIST. NO.	STATE	FED. AID PROJ. NO.	FISCAL YEAR	SHEET NO.	TOTAL SHEETS
5	MO.		19	28	

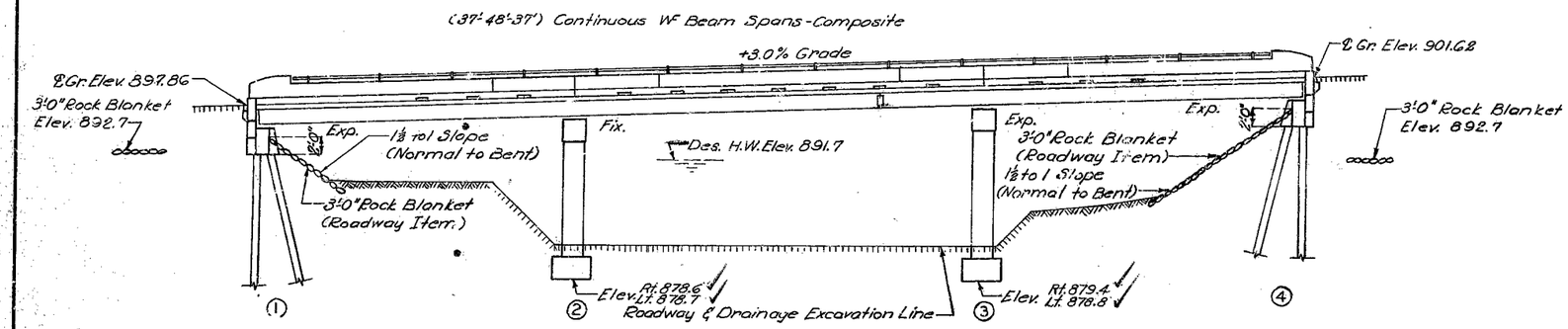

GENERAL ELEVATION

Note: Roadway fill (full roadway width) was placed up to elevation of bottom of concrete beam in front of and not less than 25'-0" in back of End Bent No.4 before steel piles were driven.

GENERAL NOTES:

Design Specifications: A.A.S.H.O. - 1965

Design Loading:

H 15-44 15#/sq. ft. Future Wearing Surface
Earth 120# Equivalent Fluid Pressure 30#
Fatigue A.W.S. D20-66 Formula 5b

Design Unit Stresses:

Class B Concrete (substructure) fc = 1,200 psi
Class B1 Concrete (superstructure) fc = 1,600 psi
Reinforcing Steel fs = 20,000 psi
Structural Steel (A.S.T.M. A36-66) fs = 20,000 psi
Steel Pile (A.S.T.M. A36-66) fb = 6,000

Surface Seal:

Superstructure deck surface sealed.

Fabricated Steel:

Field connections, High Strength Bolts ¾"ϕ, holes 13/16"ϕ except as noted.

PILE & FOOTING DATA

	BENT NO.	1	2	3	4
BEARING PILE	Pile Type and Size	10 BP42			10 BP42
	Number	4			4
	Approximate Length Ft.	15			15
	Design Bearing Tons	29			29
	Hammer Energy req'd. Ft.Lbs.	7,100			7,100
SPREAD FOOTINGS	Foundation Material		Rock	Rock	
	Design Bearing Tons/Sq. Ft.		6.1	6.1	

Minimum energy requirement of hammer based on plan length and design bearing value of piles. Increase by the factor (W+w)/2W when the weight of the ram (W) is less than the weight of the pile (w).
All pile were driven to practical refusal.

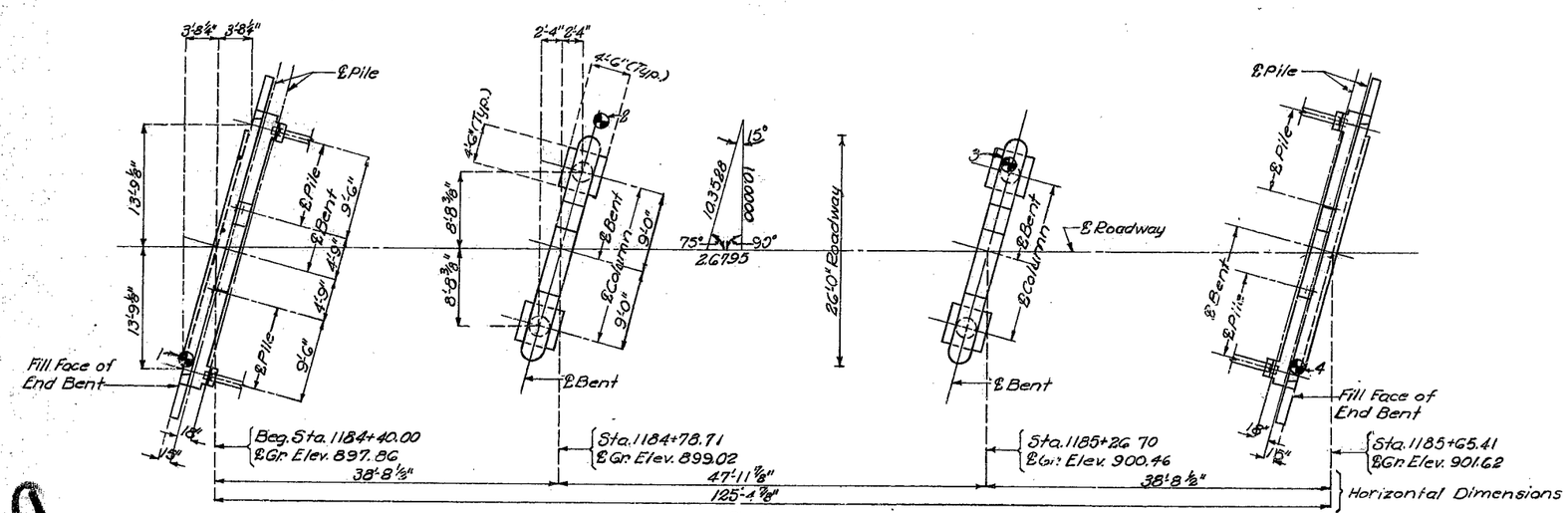

PLAN

Note: ⊗ indicates location of borings. See sheet 2 of 8 for Boring Data.

QUANTITIES

ITEM		SUBSTR.	SUPERSTR.	TOTAL
Class 1 Excavation for Structures	Cu. Yd.	23.5		23.5
Steel Piles in Place (10")	Lin. Ft.	119		119
Class B Concrete	Cu. Yd.	56.4		56.4
Class B1 Concrete	Cu. Yd.		98.5	98.5
Reinforcing Steel	Lb.	7610	26510	34120
Fabricated Structural Carbon Steel	Lb.		38230	38230
Bridge Rail (Single tube type)	Lin. Ft.		229	229
Test Holes	Lin. Ft.	16		16

Note: No payment for excavation was allowed at End Bents No. 1 & 4.

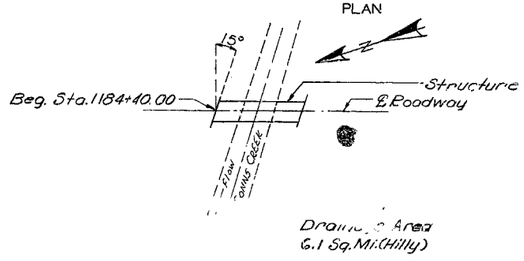

Drainage Area
6.1 Sq. Mi. (Hilly)

LOCATION SKECTH

B.M. X Top Rt. Wing Abut. #1 Bridge Sta. 1184+40.0 Elev. 898.31

BRIDGE OVER CONNS CREEK

STATE ROAD FROM FREEDOM SOUTHEAST TO RICHLAND

ABOUT 2.5 MILES N.W. OF RICHLAND

PROJECT NO. S-1064(2) S.A. **STA.** 1184+40.00

CAMDEN **COUNTY**

SUBMITTED BY D. B. Jenkins BRIDGE ENGINEER DATE 4/11/67

APPROVED BY M. J. Snider CHIEF ENGINEER DATE 4/11/67

STD. 54.00

A-2097

DESIGNED SEPT. 1966 BY STUTTE
DETAILED DEC. 1966 BY MORLOCK
CHECKED JAN. 1967 BY BRYNIARSKI

Note: This drawing is not to scale. Follow dimensions.

Sheet No. 1A of 2.

FINAL PLANS

179

MISSOURI STATE HIGHWAY DEPARTMENT

FINAL PLANS

FED. ROAD DIST. NO.	STATE	FED. AID PROJ. NO.	FISCAL YEAR	SHEET NO.	TOTAL SHEETS
	MO.				

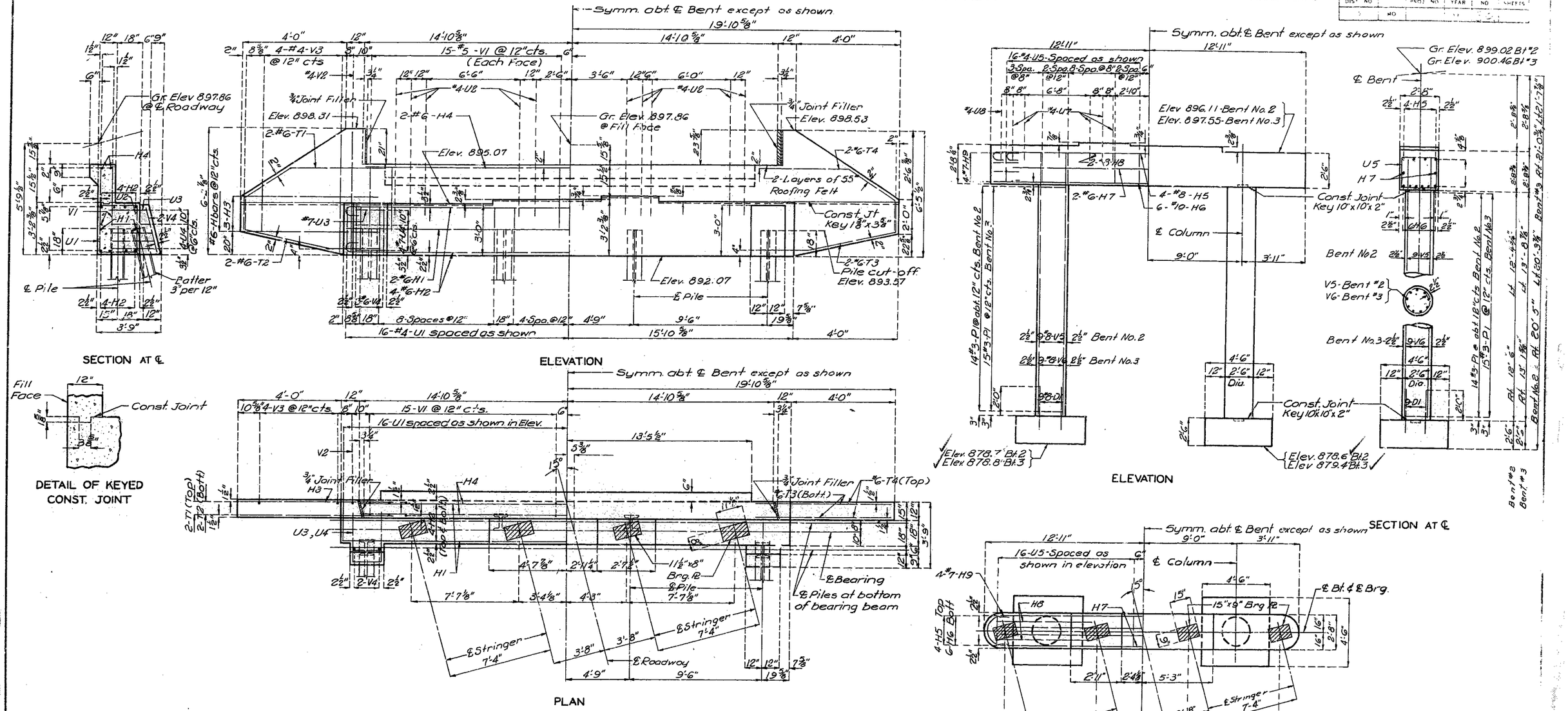

BRIDGE OVER CONNS CREEK

STATE ROAD FROM FREEDOM SOUTWEST TO RICHLAND

ABOUT 2.5 MILES N.W. OF RICHLAND

PROJECT NO. S-1064(2) SA **STA.** 1184+40.00

CAMDEN **COUNTY**

No.	Revised
1.1	July 1965

DETAILED DEC 1966 BY MORLOCK

CHECKED JAN. 1967 BY BRYNIARSKI

Note: This drawing is not to scale. Follow dimensions.

Sheet No. 3A of 2.

A-2097

FINAL PLANS