MISSOURI HIGHWAYS AND TRANSPORTATION COMMISSION
PLANS FOR PROPOSED
STATE HIGHWAY
STODDARD COUNTY

DESIGN DESIGNATION

A.A.D.T. - 2017 = 420
A.A.D.T. - 2037 = 465
D.H.V. = 10%
T = 11%
V = 55 M.P.H.

FUNCTIONAL CLASSIFICATION - MAJOR COLLECTOR

CONVENTIONAL SYMBOLS
(USED IN PLANS)

	EXISTING	NEW
BUILDINGS AND STRUCTURES		
GUARD RAIL		
CONCRETE RIGHT-OF-WAY MARKER		
STEEL RIGHT-OF-WAY MARKER		
LOCATION SURVEY MARKER		
UTILITIES		
FIBER OPTICS	—FO—	—FO—
OVERHEAD TELEPHONE	—○—	—●—
UNDERGROUND TELEPHONE	—T—	—T—
OVERHEAD POWER	—□—	—■—
UNDERGROUND POWER	—P—	—P—
GAS	—G—	—G—
WATER	—W—	—W—
MANHOLE	SAN	
FIRE HYDRANT	HYD	
WATER VALVE	WV	
WATER METER	WM	
DROP INLET	DI	
DITCH BLOCK		
GROUND MOUNTED SIGN	SIGN	
LIGHT POLE		
H-FRAME POWER POLE		
TELEPHONE PEDESTAL	PED	
FENCE		
CHAIN LINK	—V—	
WOVEN WIRE	—X—	
GATE POST		
BENCHMARK	BM	

NOTE: DASHED OR OPEN SYMBOLS INDICATE EXISTING FEATURES

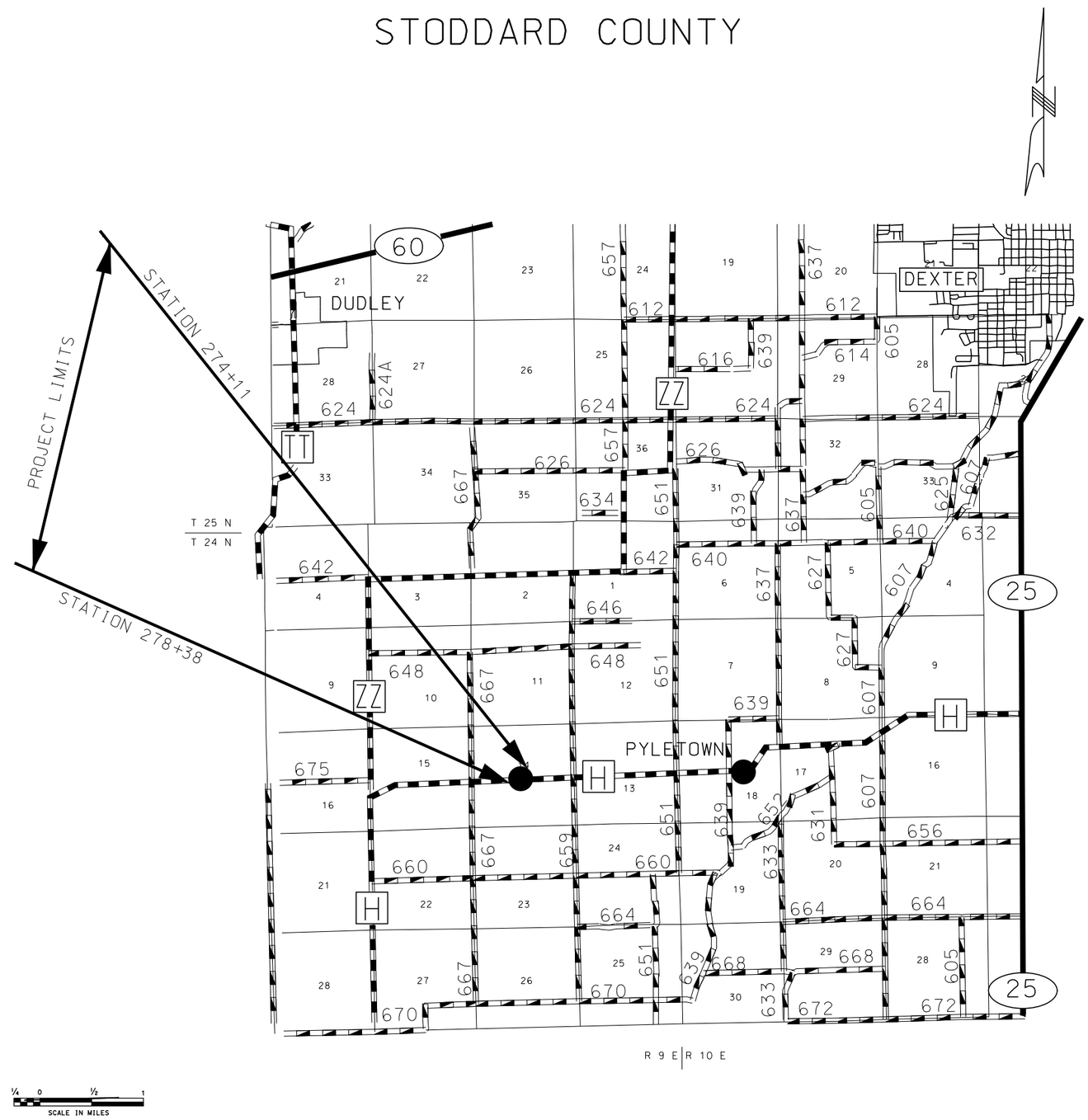

INDEX OF SHEETS

DESCRIPTION	SHEET NUMBER
TITLE SHEET	1
TYPICAL SECTIONS (TS) (1 SHEETS)	2
QUANTITIES (QU) (2 SHEETS)	3
PLAN-PROFILE (PP)	4-5
TRAFFIC CONTROL SHEETS (TC)	6-7
SPECIAL SHEETS (SS)	8
BRIDGE DRAWINGS (B)	
A8474	1-23

LENGTH OF PROJECT

BEGINNING OF PROJECT	STATION 274+11
END OF PROJECT	STATION 278+38
APPARENT LENGTH	427 FEET
EQUATIONS AND EXCEPTIONS:	
TOTAL CORRECTIONS	0.000 FEET
NET LENGTH OF PROJECT	427 FEET
STATE LENGTH	427 FEET

STATE OF MISSOURI
ERIC KRAPF
NUMBER E-30103
PROFESSIONAL ENGINEER
THIS SHEET HAS BEEN SIGNED, SEALED AND DATED ELECTRONICALLY.

DATE PREPARED	10/3/2016
ROUTE	H
STATE	MO
DISTRICT	SE
SHEET NO.	1
COUNTY	STODDARD
JOB NO.	J9S3145
CONTRACT ID.	
PROJECT NO.	
BRIDGE NO.	

DESCRIPTION	DATE

MISSOURI HIGHWAYS AND TRANSPORTATION COMMISSION
105 WEST CAPITOL
JEFFERSON CITY, MO 65102
1-888-ASK-MODOT (1-888-275-6636)

IF A SEAL IS PRESENT ON THIS SHEET IT HAS BEEN ELECTRONICALLY SEALED AND DATED.

REV.

CLOSE ROUTE H
DURING CONSTRUCTION

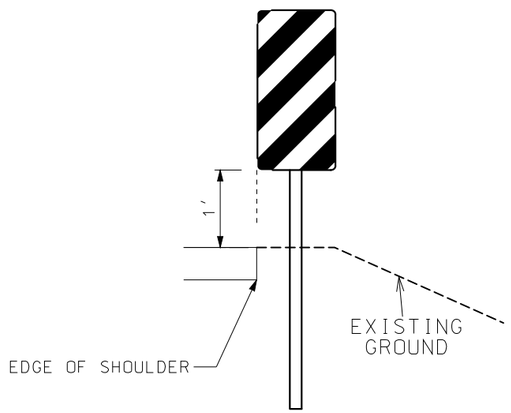

TYPE III OBJECT MARKER

MOUNTING HEIGHT DETAILS

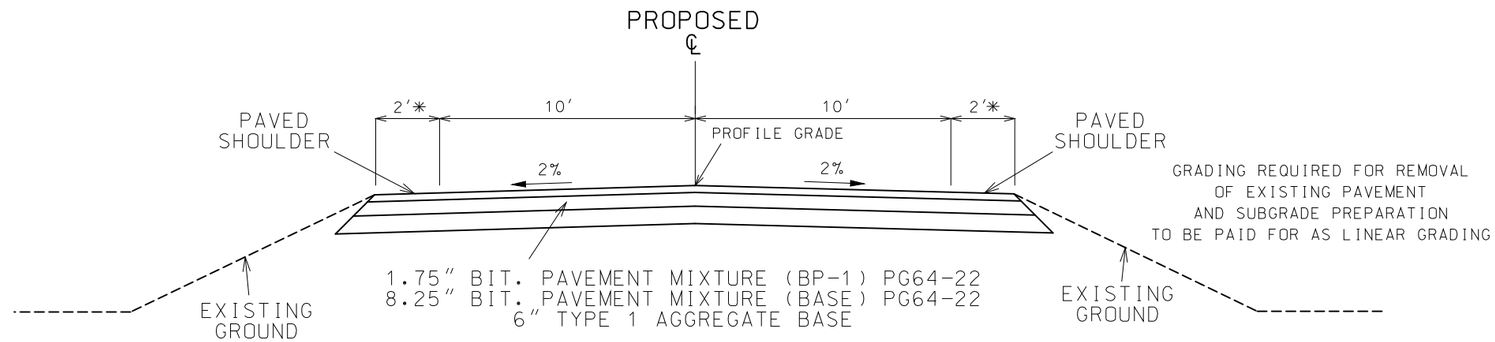

(OPTIONAL PAVEMENT
8" PCCP OVER
6" TYPE 1 AGGREGATE BASE
WITH 10' JOINT SPACING
AND 1.25" DOWEL BARS)

TYPICAL SECTION
ROUTE H

STA. 275+31.57 TO STA. 275+81.57
STA. 276+83.19 TO STA. 277+33.19

✳ - TAPER 0' TO 2' FROM STA. 275+31.52 TO STA. 275+81.57
TAPER 2' TO 0' FROM STA. 276+83.19 TO STA. 277+33.19

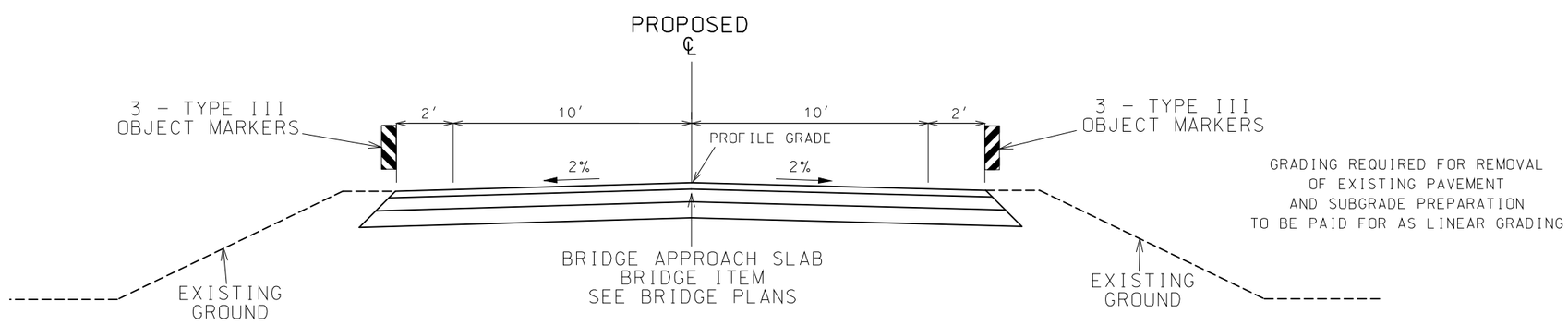

TYPICAL SECTION
ROUTE H

STA. 275+81.57 TO 276+01.57
STA. 276+63.19 TO 276+83.19

TYPICAL SHEET
1 OF 1

STATE OF MISSOURI
ERIC KRAPF
NUMBER E-30103
PROFESSIONAL ENGINEER

THIS SHEET HAS BEEN SIGNED, SEALED AND DATED ELECTRONICALLY.

DATE PREPARED	10/24/2016
ROUTE	H
STATE	MO
DISTRICT	SE
SHEET NO.	2
COUNTY	STODDARD
JOB NO.	J9S3145
CONTRACT ID.	
PROJECT NO.	
BRIDGE NO.	

DATE	DESCRIPTION

IF A SEAL IS PRESENT ON THIS SHEET IT HAS BEEN ELECTRONICALLY SEALED AND DATED.

MISSOURI HIGHWAYS AND TRANSPORTATION COMMISSION
105 WEST CAPITOL
JEFFERSON CITY, MO 65102
1-888-ASK-MODOT (1-888-275-6636)

MISSOURI HIGHWAYS AND TRANSPORTATION COMMISSION

SUMMARY OF QUANTITIES

PAVEMENT MARKING

LOG MILE	LOG MILE	WATERBORNE PAVEMENT MARKING 4" SOLID WHITE (L.F.)	WATERBORNE PAVEMENT MARKING 4" SOLID YELLOW (L.F.)	PAVEMENT MARKING REMOVAL (4" SOLID WHITE) (L.F.)	REMARKS
274+11	276+01	380	380	380	DOUBLE YELLOW CL WITH EDGELINES
276+01	276+63	124	124	0	DOUBLE YELLOW CL WITH EDGELINES
276+63	278+38	350	350	350	DOUBLE YELLOW CL WITH EDGELINES
TOTAL		854	854	730	

PAVEMENT MARKING LOCATIONS AND QUANTITIES ARE APPROXIMATE.

TYPE III OBJECT MARKERS AT BRIDGE ENDS

STA	LOC	BRIDGE NUMBER	SIGN NUMBER	U-CHANNEL POST 3 lb (LF)	TYPE III OBJECT MARKER PAID FOR AS SH-FLAT SHEETING (SF)	REMARKS
276+07	LT	A8474	OM3-L	21	9	7FT OF POST PER SIGN. 3 SIGNS
275+96	RT	A8474	OM3-R	21	9	7FT OF POST PER SIGN. 3 SIGNS
276+69	LT	A8474	OM3-L	21	9	7FT OF POST PER SIGN. 3 SIGNS
276+58	RT	A8474	OM3-R	21	9	7FT OF POST PER SIGN. 3 SIGNS
				84	36	

SEE TYPICAL SHEET

TEMPORARY EROSION CONTROL

STA.	STA.	ROCK DITCH CHECK (LF)	SILT FENCE (LF)	TYPE C BERM (LF)	SED. REM. (CY)	REMARKS
275+32	275+82	14	53		2	SILT FENCE RIGHT
275+32	276+05	14	76		2	SILT FENCE LEFT
275+82	276+29			59		BERM AROUND SPILL FILL ROCK BLANKET (EAST SIDE)
276+30	276+85			65		BERM AROUND SPILL FILL ROCK BLANKET (WEST SIDE)
276+58	277+33	14	78		2	SILT FENCE RIGHT
276+85	277+33	14	52		2	SILT FENCE LEFT
		56	259	124	8	

PAVEMENT AND BASE AT BRIDGE ENDS

LOCATION	STA	STA	10" OPTIONAL PAVEMENT (SY)	6" TYPE 1 AGGREGATE BASE (SY)	POROUS BACKFILL (CY)
EAST PAVEMENT	275+31.57	275+81.57	122.2	122	30
WEST PAVEMENT	276+83.19	277+33.19	122.2	122	30
			244.4	244	60

ROCK BLANKET AND DITCH LINER

STA	STA	FURNISHING TYPE 2 ROCK BLANKET (CY)	PLACING TYPE 2 ROCK BLANKET (CY)	FURNISHING TYPE 1 ROCK DITCH LINER (CY)	PLACING TYPE 1 ROCK DITCH LINER (CY)	GEOTEXTILE CLASS 1 OR 2 (SY)	REMARKS
275+82	276+19	43	43			64	EAST BRIDGE SPILL FILL ROCK BLANKET
275+76	275+84			2	2	10	RIGHT DRAIN FLUME
275+87	276+05			3	3	15	LEFT DRAIN FLUME
276+60	276+78			3	3	15	RIGHT DRAIN FLUME
276+81	276+89			2	2	10	LEFT DRAIN FLUME
276+40	276+85	73	73			110	WEST BRIDGE SPILL FILL ROCK BLANKET
		116	116	10	10	224	

MOBILIZATION

1 LUMP SUM

CONTRACTOR FURNISHED SURVEYING AND STAKING

1 LUMP SUM

LINEAR GRADING

STA.	STA.	LT/RT	LINEAR GRADING CLASS 1 (STA.)	SEEDING COOL SEASON MIX (AC)	REMARKS
275+31.57	276+01.57	LT./RT.	0.7	0.03	10' EACH SIDE SEEDING
276+01.57	276+13.00		0.1	0.01	REMOVAL OF MATERIAL UNDER BRIDGE FOR INSTALLATION OF ROCK BLANKET
276+48.19	276+63.19		0.2	0.01	REMOVAL OF MATERIAL UNDER BRIDGE FOR INSTALLATION OF ROCK BLANKET
276+63.19	277+33.19	LT./RT.	0.7	0.03	10' EACH SIDE SEEDING
			1.7	0.08	
			USE	0.1	

SUMMARY SHEET
1 OF 2

STATE OF MISSOURI
ERIC KRAPF
NUMBER E-30103
PROFESSIONAL ENGINEER
THIS SHEET HAS BEEN SIGNED, SEALED AND DATED ELECTRONICALLY.

DATE PREPARED 10/3/2016

ROUTE	STATE
H	MO
DISTRICT	SHEET NO.
SE	3

COUNTY STODDARD

JOB NO. J9S3145

CONTRACT ID.

PROJECT NO.

BRIDGE NO.

DESCRIPTION

DATE

IF A SEAL IS PRESENT ON THIS SHEET IT HAS BEEN ELECTRONICALLY SEALED AND DATED.

MISSOURI HIGHWAYS AND TRANSPORTATION COMMISSION

105 WEST CAPITOL
JEFFERSON CITY, MO 65102
1-888-ASK-MODOT (1-888-275-6636)

REV.

EFFECTIVE: 04-01-2016

SIGN	SIZE (IN.)	AREA (SQ. FT.)	QTY	TOTAL AREA	QTY RELOC	TOTAL RELOC AREA	DESCRIPTION
WARNING SIGNS							
W01-1L	48X48	16.00					TURN (SYMBOL LEFT ARROW)
W01-1R	48X48	16.00					TURN (SYMBOL RIGHT ARROW)
W01-2L	48X48	16.00					CURVE (SYMBOL LEFT ARROW)
W01-2R	48X48	16.00					CURVE (SYMBOL RIGHT ARROW)
W01-3L	48X48	16.00					REVERSE TURN (SYMBOL LEFT ARROW)
W01-3R	48X48	16.00					REVERSE TURN (SYMBOL RIGHT ARROW)
W01-4L	48X48	16.00					REVERSE CURVE (SYMBOL LEFT ARROW)
W01-4R	48X48	16.00					REVERSE CURVE (SYMBOL RIGHT ARROW)
W01-4bL	48X48	16.00					DOUBLE ARROW REVERSE CURVE (SYMBOL LEFT ARROWS)
W01-4bR	48X48	16.00					DOUBLE ARROW REVERSE CURVE (SYMBOL RIGHT ARROWS)
W01-4cL	48X48	16.00					TRIPLE ARROW REVERSE CURVE (SYMBOL LEFT ARROWS)
W01-4cR	48X48	16.00					TRIPLE ARROW REVERSE CURVE (SYMBOL RIGHT ARROWS)
W01-6	60X30	12.50					HORIZONTAL ARROW (SYMBOL)
W01-6a	72X36	18.00					HORIZONTAL ARROW (SYMBOL ON PERMANENT BARRICADE)
W01-7	60X30	12.50					DOUBLE HEAD HORIZONTAL ARROW (SYMBOL)
W01-7a	72X36	18.00					DOUBLE HEAD HORIZONTAL ARROW (SYMBOL ON PERMANENT BARRICADE)
W01-8	18X24	3.00					CHEVRON (SYMBOL)
W01-8a	30X36	7.50					CHEVRON (SYMBOL FOR DIVIDED HIGHWAYS)
W03-1	48X48	16.00					STOP AHEAD (SYMBOL)
W03-2	48X48	16.00					YIELD AHEAD (SYMBOL)
W03-3	48X48	16.00					SIGNAL AHEAD (SYMBOL)
W03-4	48X48	16.00					BE PREPARED TO STOP
W03-5	48X48	16.00					SPEED LIMIT AHEAD
W04-1L	48X48	16.00					MERGE (SYMBOL FROM LEFT)
W04-1R	48X48	16.00					MERGE (SYMBOL FROM RIGHT)
W05-1	48X48	16.00					ROAD/BRIDGE/RAMP NARROWS
W05-3	48X48	16.00					ONE LANE BRIDGE
W05-5	48X48	16.00					NARROW LANES
W06-1	48X48	16.00					DIVIDED HIGHWAY (SYMBOL)
W06-2	48X48	16.00					DIVIDED HIGHWAY END (SYMBOL)
W06-3	48X48	16.00					TWO WAY TRAFFIC (SYMBOL)
W07-3a	30X24	5.00					NEXT XX MILES (PLAQUE)
W08-1	48X48	16.00					BUMP
W08-2	48X48	16.00					DIP
W08-3	48X48	16.00					PAVEMENT ENDS
W08-4	48X48	16.00					SOFT SHOULDER
W08-5	48X48	16.00					SLIPPERY WHEN WET (SYMBOL)
W08-6	48X48	16.00					TRUCK CROSSING WITH FLAGS
W08-6c	48X48	16.00					TRUCK ENTRANCE
W08-7	36X36	9.00					LOOSE GRAVEL
W08-9	48X48	16.00					LOW SHOULDER
W08-11	48X48	16.00					UNEVEN LANES
W08-12	48X48	16.00					NO CENTER LINE
W10-1	42 RND.	9.62					RAILROAD CROSSING
W012-1	24X24	4.00					DOUBLE DOWN ARROW (SYMBOL)
W012-2	48X48	16.00					LOW CLEARANCE (SYMBOL)
W012-2x	24X18	3.00					LOW CLEARANCE (PLAQUE)
W012-2a	84X24	14.00					OVERHEAD LOW CLEARANCE (FEET AND INCHES)
W08-15	48X48	16.00					GROOVED PAVEMENT
W08-15p	30X24	5.00					MOTORCYCLE (PLAQUE)
W08-17	48X48	16.00					SHOULDER DROP-OFF (SYMBOL)
W08-17p	30X24	5.00					SHOULDER DROP-OFF (PLAQUE)
SPECIAL	120X60	50.00					LOW CLEARANCE XX FT XX IN XX MILES AHEAD
SPECIAL	120X60	50.00					WIDTH RESTRICTION XX FT XX IN XX MILES AHEAD
W013-1	30X30	6.25					ADVISORY SPEED (PLAQUE)
W016-2	30X24	5.00	2	10			500 FEET (PLAQUE)
W016-3	30X24	5.00					X MILE (PLAQUE)
W020-1	48X48	16.00					ROAD/BRIDGE/RAMP WORK AHEAD
W020-2	48X48	16.00					DETOUR AHEAD
W020-3	48X48	16.00	4	64			ROAD CLOSED AHEAD
W020-4	48X48	16.00	2	32			ONE LANE ROAD AHEAD
W020-5	48X48	16.00					RIGHT/CENTER/LEFT LANE CLOSED AHEAD
W020-5a	48X48	16.00					2 RIGHT/CENTER/LEFT LANES CLOSED AHEAD
W020-6a	48X48	16.00					RIGHT/CENTER/LEFT LANE CLOSED
W020-7a	48X48	16.00					FLAGGER (SYMBOL) WITH FLAGS
W021-2	36X36	9.00					FRESH OIL
W021-5b	48X48	16.00					SHOULDER WORK AHEAD
W022-1	48X48	16.00					BLASTING ZONE AHEAD
W022-2	42X36	10.50					TURN OFF 2-WAY RADIO AND PHONE
W022-3	42X36	10.50					END BLASTING ZONE
W022-6e	21X15	2.19	4	8.76			WET PAINT (ARROW PIVOTS)
GUIDE SIGNS							
SPECIAL	36X36	9.00					FRESH OIL/LOOSE GRAVEL
E05-1	36X48	12.00					GORE EXIT
E05-2	48X36	12.00					EXIT OPEN
E05-2a	48X36	12.00					EXIT CLOSED
G020-1	60X24	10.00					ROAD WORK NEXT 10 MILES
G020-2	48X24	8.00					END ROAD WORK
G020-4	36X18	4.50					PILOT CAR FOLLOW ME
SPECIAL	42X30	8.75					PLEASE WAIT FOR PILOT CAR
G020-5aP	36X24	6.00					WORK ZONE (PLAQUE)
M04-8a	24X18	3.00					END DETOUR
M04-9L	48X36	12.00					DETOUR (LEFT ARROW)
M04-9R	48X36	12.00					DETOUR (RIGHT ARROW)
M04-10L	48X18	6.00					DETOUR (ARROW LEFT)
M04-10R	48X18	6.00					DETOUR (ARROW RIGHT)
REGULATORY SIGNS							
R1-1	48X48	13.25					STOP
R1-2	48 TRI.	6.93					YIELD
R1-2a	36X36	9.00					TO ONCOMING TRAFFIC (PLAQUE)
R1-3	20X9	1.25					X-WAY (PLAQUE)
R2-1	36X48	12.00					SPEED LIMIT XX (4-45, 4-55)
R3-1	48X48	16.00					NO RIGHT TURN (SYMBOL)
R3-2	48X48	16.00					NO LEFT TURN (SYMBOL)
R3-3	36X36	9.00					NO TURNS
R3-4	48X48	16.00					NO U-TURN (SYMBOL)
R3-7L	30X30	6.25					LEFT LANE MUST TURN LEFT
R3-7R	30X30	6.25					RIGHT LANE MUST TURN RIGHT
R4-1	36X48	12.00					DO NOT PASS
R4-2	36X48	12.00					PASS WITH CARE
R4-7aL	36X48	12.00					KEEP LEFT (HORIZONTAL ARROW)
R4-7a	36X48	12.00					KEEP RIGHT (HORIZONTAL ARROW)
R5-1	30X30	6.25					DO NOT ENTER
R5-1a	36X24	6.00					WRONG WAY
R6-1L	48X18	6.00					ONE WAY ARROW (LEFT)
R6-1R	48X18	6.00					ONE WAY ARROW (RIGHT)
R6-2L	24X30	5.00					ONE WAY (LEFT)
R6-2R	24X30	5.00					ONE WAY (RIGHT)
R10-6	24X36	6.00					STOP HERE ON RED (45° ARROW)
R11-2	48X30	10.00	2	20			ROAD CLOSED
R11-3a	60X30	12.50	2	25			ROAD CLOSED 1, 5 MILES AHEAD LOCAL TRAFFIC ONLY
R11-4	60X30	12.50	2	25			ROAD CLOSED TO THRU TRAFFIC
S4-4	36X15	3.75					WHEN FLASHING
CONST-3A	60X48	20.00					FINE SIGN
CONST-3X	56X12	4.67					SPEEDING/PASSING (PLATE)
MISCELLANEOUS SIGNS							
SPECIAL	36X48	12.00					POINT OF PRESENCE
SPECIAL	96X48	32.00					POINT OF PRESENCE
CONST-7-48	48X24	8.00					RATE OUR WORK ZONE
CONST-7-72	72X36	18.00					RATE OUR WORK ZONE
616-10.05 CONSTRUCTION SIGNS TOTAL				185			
616-10.10 RELOCATED SIGNS TOTAL							

ITEM NUMBER	TOTAL QTY	DESCRIPTION
6122008		IMPACT ATTENUATOR (8 SAND BARRELS)
6122009		IMPACT ATTENUATOR (9 SAND BARRELS)
6122010		IMPACT ATTENUATOR (10 SAND BARRELS)
6122012		IMPACT ATTENUATOR (12 SAND BARRELS)
6122014		IMPACT ATTENUATOR (14 SAND BARRELS)
6122017		IMPACT ATTENUATOR (17 SAND BARRELS)
6122019		IMPACT ATTENUATOR (19 SAND BARRELS)
6122020		REPLACEMENT SAND BARREL
6122030		IMPACT ATTENUATOR (RELOCATION)
6123000A	2	TRUCK OR TRAILER MOUNTED ATTENUATOR (TMA)
6161007		SPEED LIMIT AND STROBE LIGHT ASSEMBLY
6161008		ADVANCED WARNING RAIL SYSTEM
6161009		FLAG ASSEMBLY
6161020		CHANNELIZER (DRUM-LIKE)
6161022		CHANNELIZER (CONES)
6161024		CHANNELIZER (TRIM LINE) WITH LIGHT
6161025		CHANNELIZER (TRIM LINE)
6161026		CHANNELIZER (VERTICAL PANEL)
6161027		CHANNELIZER (VERTICAL PANEL) WITH LIGHT
6161028		CHANNELIZER
6161030	6	TYPE III MOVEABLE BARRICADE
6161031		TYPE III MOVEABLE BARRICADE WITH LIGHT
6161033		DIRECTION INDICATOR BARRICADE
6161034		DIRECTION INDICATOR BARRICADE, WITH LIGHT
6161040		FLASHING ARROW PANEL
6161047		TYPE III OBJECT MARKER
6161051		WARNING LIGHT, TYPE A
6161052		WARNING LIGHT, TYPE B
6161053		WARNING LIGHT, TYPE C
6161055		SEQUENTIAL FLASHING WARNING LIGHT
6161070		TUBULAR MARKER
6161095		RADAR SPEED ADVISORY SYSTEM
6161096		CHANGEABLE MESSAGE SIGN, COMMISSION FURNISHED/RETAINED
6161098A	2	CHANGEABLE MESSAGE SIGN WITHOUT COMMUNICATION INTERFACE, CONTRACTOR FURNISHED/RETAINED
6161099		CHANGEABLE MESSAGE SIGN WITH COMMUNICATION INTERFACE, CONTRACTOR FURNISHED/RETAINED
6162000A		WORK ZONE TRAFFIC SIGNAL SYSTEM
6173600D		CONTRACTOR FURNISHED/RETAINED TEMPORARY TRAFFIC BARRIER
6173602B		CONTRACTOR FURNISHED/COMMISSION RETAINED TEMPORARY TRAFFIC BARRIER
6174000A		TEMPORARY TRAFFIC BARRIER HEIGHT TRANSITION
6175010A		RELOCATING TEMPORARY TRAFFIC BARRIER
6176000B		COMMISSION FURNISHED/RETAINED TEMPORARY TRAFFIC BARRIER
6177000B		COMMISSION FURNISHED/RETAINED TEMPORARY TRAFFIC BARRIER HEIGHT TRANSITION
9019400		TEMPORARY LIGHTING
9029400		TEMPORARY TRAFFIC SIGNALS
9029401		TEMPORARY TRAFFIC SIGNALS AND LIGHTING

SUMMARY SHEET
SHEET 2 OF 2

STATE OF MISSOURI
ERIC KRAPF
NUMBER E-30103
PROFESSIONAL ENGINEER

THIS SHEET HAS BEEN SIGNED, SEALED AND DATED ELECTRONICALLY.

DATE PREPARED 10/3/2016

ROUTE	STATE
H	MO
DISTRICT	SHEET NO.
SE	3

COUNTY: STODDARD
JOB NO.: J9S3145
CONTRACT ID.
PROJECT NO.
BRIDGE NO.

DATE	DESCRIPTION

MISSOURI HIGHWAYS AND TRANSPORTATION COMMISSION
105 WEST CAPITOL
JEFFERSON CITY, MO 65102
1-888-ASK-MODOT (1-888-275-6636)

IF A SEAL IS PRESENT ON THIS SHEET IT HAS BEEN ELECTRONICALLY SEALED AND DATED.

PROPOSED BRIDGE OVER COUNTY DRAINAGE DITCH

BRIDGE NO. A8474
LENGTH = 58 FEET
WIDTH = 24 FEET
SKEW = 25° LEFT ADVANCE
LOADING = HL-93
INSTALL 29″ VERTICAL BARRIER CURBS

FILL EXCEPTION:
STA 276+01.57 TO STA 276+63.19

SINGLE SPAN PRESTRESSED CONCRETE
I-GIRDER STRUCTURE - 58′

DRAINAGE AREA = 6.6 SQ MI
DESIGN FLOOD FREQUENCY = 50 YEARS
Q50 = 520 CFS

CLOSE ROUTE H DURING CONSTRUCTION

REPLACE EXISTING BRIDGE OVER COUNTY DRAINAGE DITCH

EXISTING BRIDGE DATA:
BRIDGE NO. S0613
LENGTH = 66 FEET
WIDTH = 20 FEET

BENCH MARKS - NAVD 88

BM2 ELEV 332.70
□ W END N WHEELGUARD
STA 276+60.08 OFF 10.41′ RT

BM3 ELEV 330.06
CPS N ROOT 30″ CHERRY TREE
STA 276+00.69 OFF 43.50′ LT

NAD83/PROJECTION 1.0

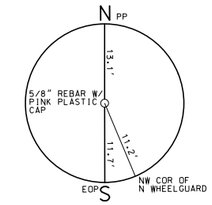

CONTROL PT #101
STA 276+63.28
OFFSET 21.41′ RT

X 950554.0150
Y 324872.3475
Z 331.70

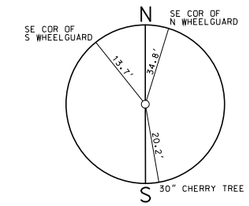

CONTROL PT #102
STA 276+02.03
OFFSET 23.52′ LT

X 950616.7633
Y 324829.5183
Z 329.89

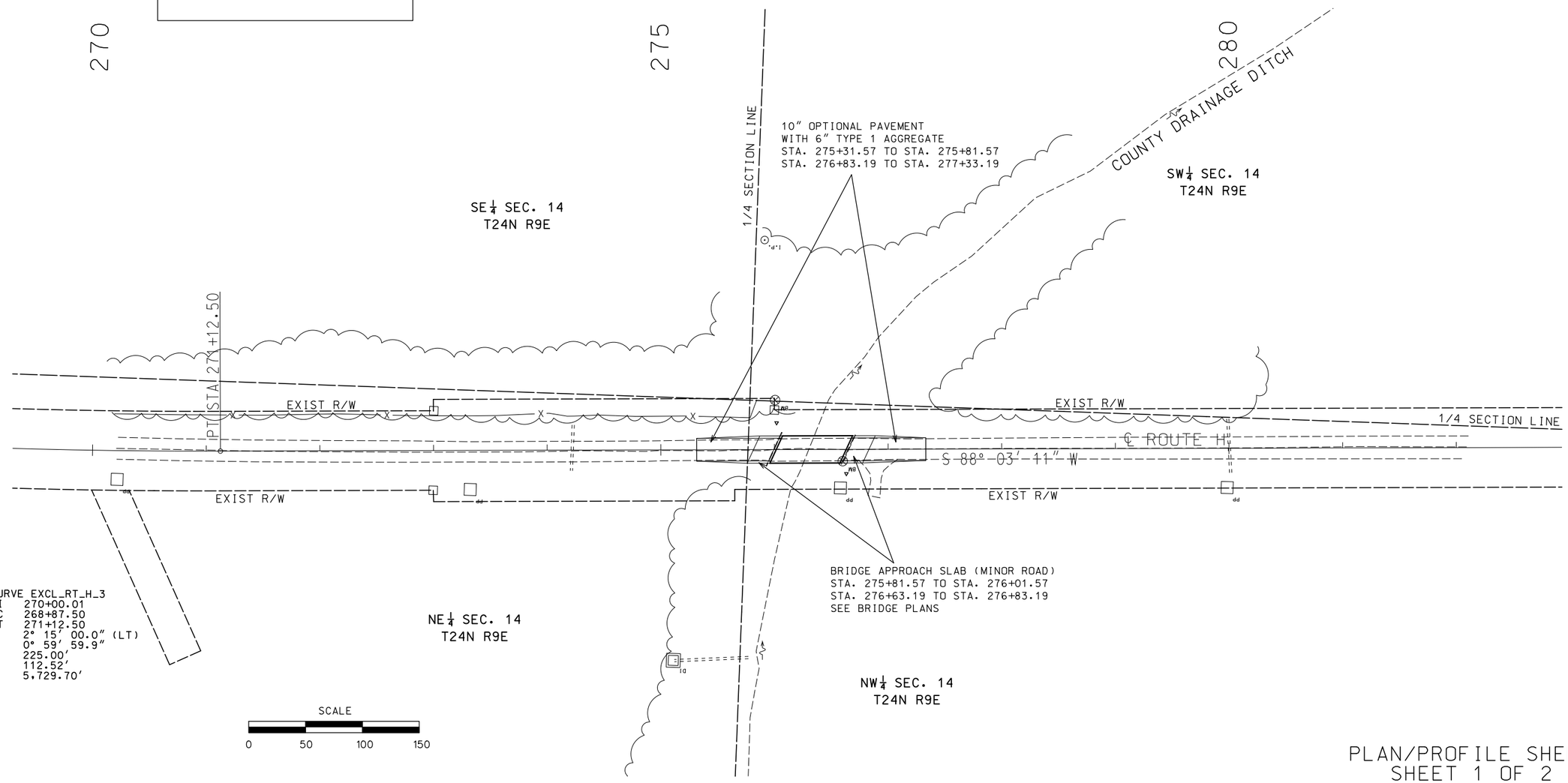

CURVE EXCL_RT_H_3
PI 270+00.01
PC 268+87.50
PT 271+12.50
Δ 2° 15′ 00.0″ (LT)
D 0° 59′ 59.9″
L 225.00′
T 112.52′
R 5,729.70′

PLAN/PROFILE SHEET
SHEET 1 OF 2

STATE OF MISSOURI
ERIC KRAPF
NUMBER E-30103
PROFESSIONAL ENGINEER

THIS SHEET HAS BEEN SIGNED, SEALED AND DATED ELECTRONICALLY.

DATE PREPARED	
10/3/2016	
ROUTE	STATE
H	MO
DISTRICT	SHEET NO.
SE	4
COUNTY	
STODDARD	
JOB NO.	
J9S3145	
CONTRACT ID.	
PROJECT NO.	
BRIDGE NO.	

DATE	DESCRIPTION

IF A SEAL IS PRESENT ON THIS SHEET IT HAS BEEN ELECTRONICALLY SEALED AND DATED.

MISSOURI HIGHWAYS AND TRANSPORTATION COMMISSION
105 WEST CAPITOL
JEFFERSON CITY, MO 65102
1-888-ASK-MODOT (1-888-275-6636)

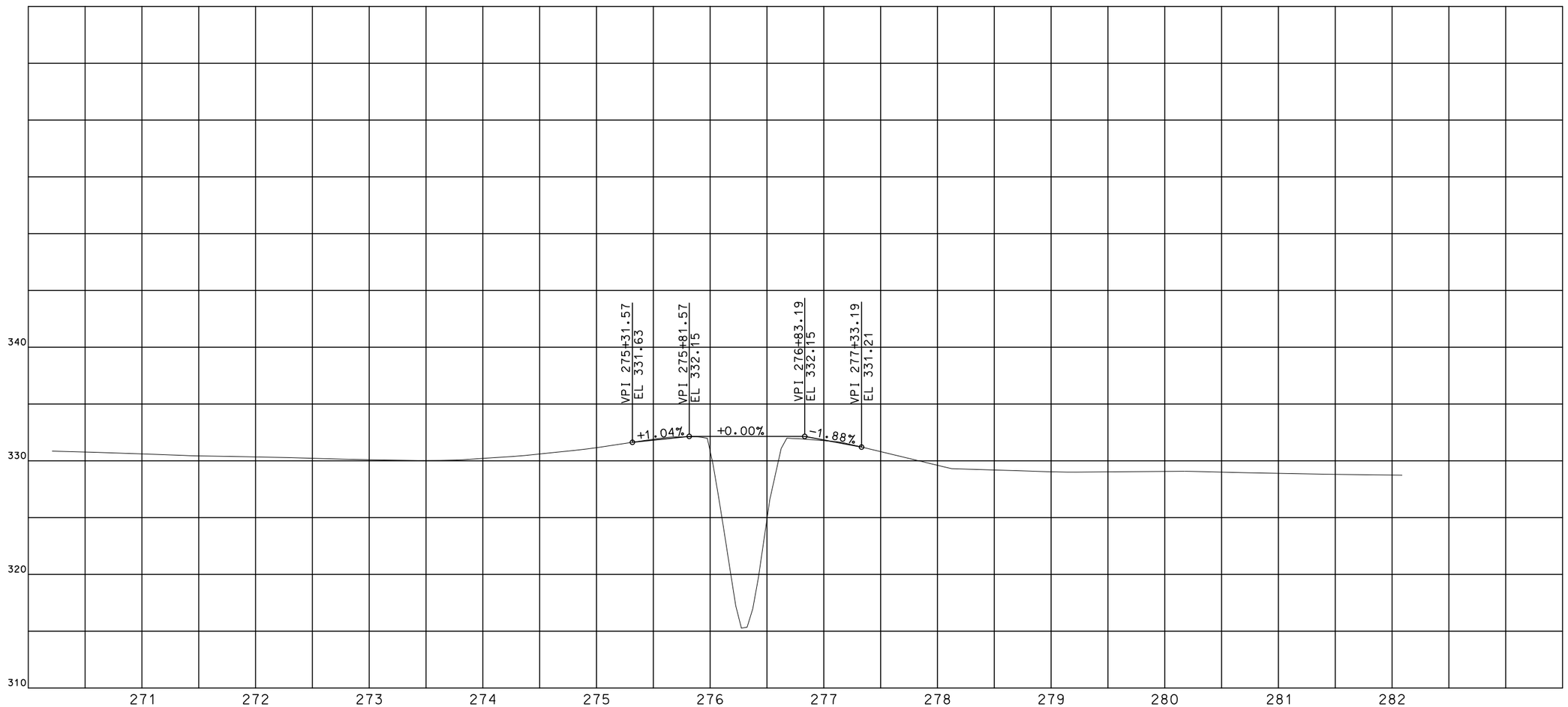

PROPOSED PROFILE
GRADE ROUTE H

SCALE
0 50 100 150

PLAN/PROFILE SHEET
SHEET 2 OF 2

STATE OF MISSOURI
ERIC KRAPF
NUMBER E-30103
PROFESSIONAL ENGINEER

THIS SHEET HAS BEEN SIGNED, SEALED AND DATED ELECTRONICALLY.

DATE PREPARED	
10/3/2016	
ROUTE	STATE
H	MO
DISTRICT	SHEET NO.
SE	5
COUNTY	
STODDARD	
JOB NO.	
J9S3145	
CONTRACT ID.	
PROJECT NO.	
BRIDGE NO.	

DATE	DESCRIPTION

MISSOURI HIGHWAYS AND TRANSPORTATION COMMISSION
105 WEST CAPITOL
JEFFERSON CITY, MO 65102
1-888-ASK-MODOT (1-888-275-6636)

IF A SEAL IS PRESENT ON THIS SHEET IT HAS BEEN ELECTRONICALLY SEALED AND DATED.

W020-3

20

20A

W020-3
W016-2

29

See Standard Plan 616.10
for Details.

TYPE III MOVEABLE
BARRICADE

TRAFFIC CONTROL LEGEND

• SIGN (SINGLE SIDED) E BARRICADE

R11-4

55

R11-3a

55A

R11-3a

55B

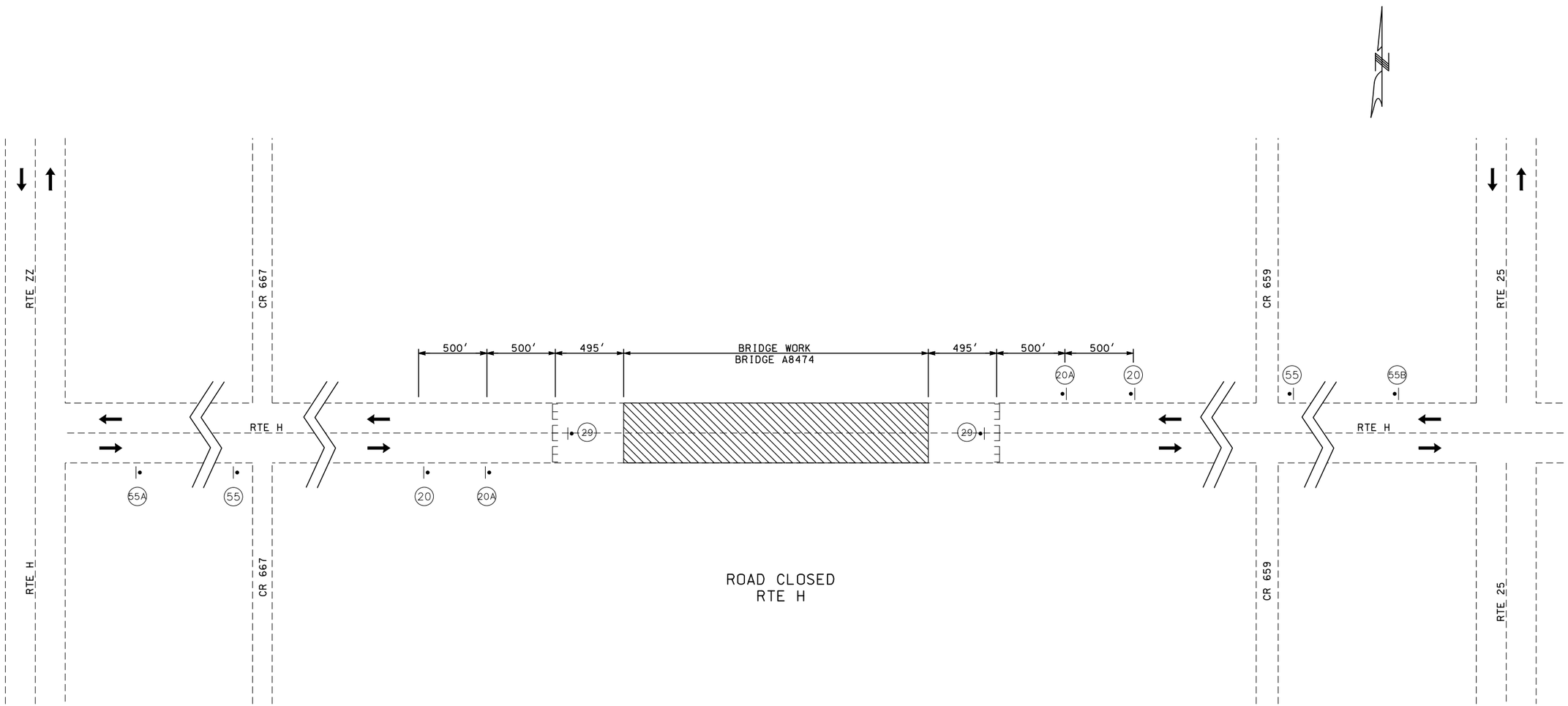

NOTE - TWO CMS TO BE PLACED
AS APPROVED BY ENGINEER

TRAFFIC CONTROL
SHEET 1 OF 2
DRAWING NOT TO SCALE

STATE OF MISSOURI
ERIC KRAPF
NUMBER E-30103
PROFESSIONAL ENGINEER

THIS SHEET HAS BEEN SIGNED, SEALED AND DATED ELECTRONICALLY.

DATE PREPARED	10/3/2016
ROUTE	H
STATE	MO
DISTRICT	SE
SHEET NO.	6
COUNTY	STODDARD
JOB NO.	J9S3145
CONTRACT ID.	
PROJECT NO.	
BRIDGE NO.	

DATE	DESCRIPTION

MISSOURI HIGHWAYS AND TRANSPORTATION COMMISSION

105 WEST CAPITOL
JEFFERSON CITY, MO 65102
1-888-ASK-MODOT (1-888-275-6636)

IF A SEAL IS PRESENT ON THIS SHEET IT HAS BEEN ELECTRONICALLY SEALED AND DATED.

REV.

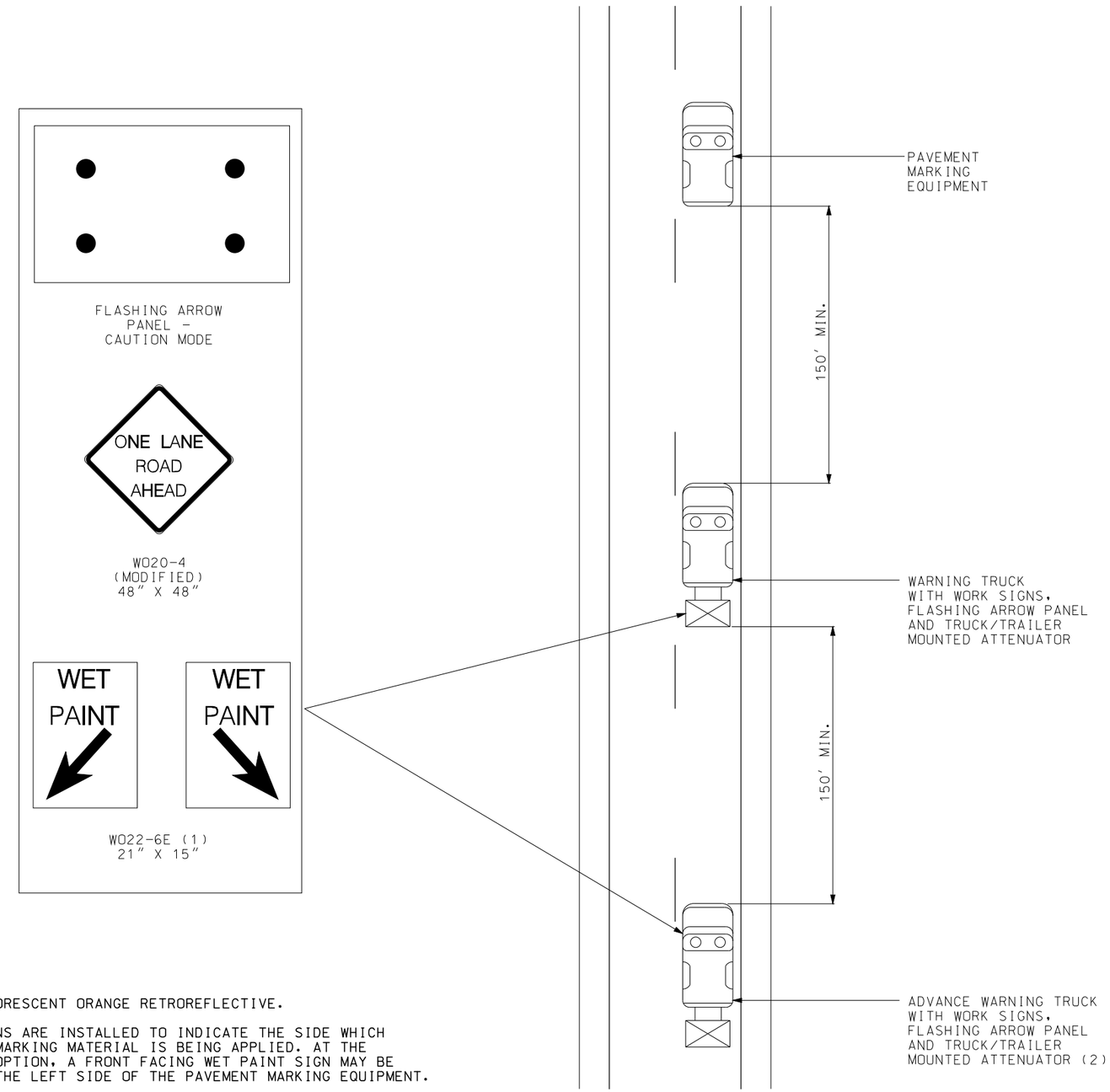

NOTES:

ALL SIGNS HAVE FLUORESCENT ORANGE RETROREFLECTIVE.

(1) WET PAINT SIGNS ARE INSTALLED TO INDICATE THE SIDE WHICH THE PAVEMENT MARKING MATERIAL IS BEING APPLIED. AT THE CONTRACTOR'S OPTION, A FRONT FACING WET PAINT SIGN MAY BE INSTALLED ON THE LEFT SIDE OF THE PAVEMENT MARKING EQUIPMENT.

(2) ADVANCE WARNING TRUCK IS POSITIONED AT THE NO TRACK POINT OF THE PAVEMENT MARKING MATERIAL OR SPACING SHOWN, WHICHEVER IS GREATER.

CENTERLINE/EDGELINE STRIPING ON TWO-LANE HIGHWAYS

TRAFFIC CONTROL
SHEET 2 OF 2

STATE OF MISSOURI
ERIC KRAPF
NUMBER E-30103
PROFESSIONAL ENGINEER

THIS SHEET HAS BEEN SIGNED, SEALED AND DATED ELECTRONICALLY.

DATE PREPARED	10/3/2016
ROUTE	H
STATE	MO
DISTRICT	SE
SHEET NO.	7
COUNTY	STODDARD
JOB NO.	J9S3145
CONTRACT ID.	
PROJECT NO.	
BRIDGE NO.	

DATE	DESCRIPTION

MISSOURI HIGHWAYS AND TRANSPORTATION COMMISSION
105 WEST CAPITOL
JEFFERSON CITY, MO 65102
1-888-ASK-MODOT (1-888-275-6636)

IF A SEAL IS PRESENT ON THIS SHEET IT HAS BEEN ELECTRONICALLY SEALED AND DATED.

REV.

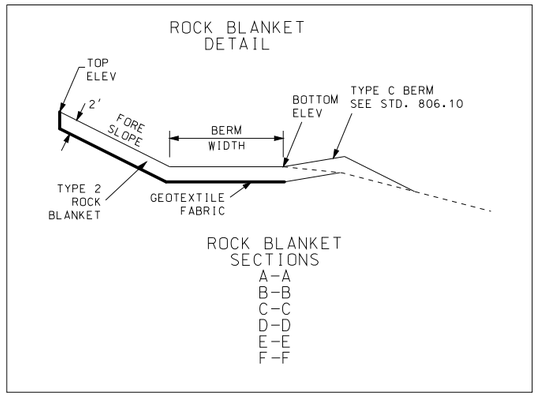

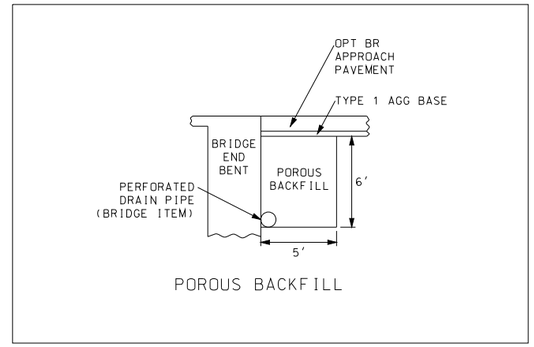

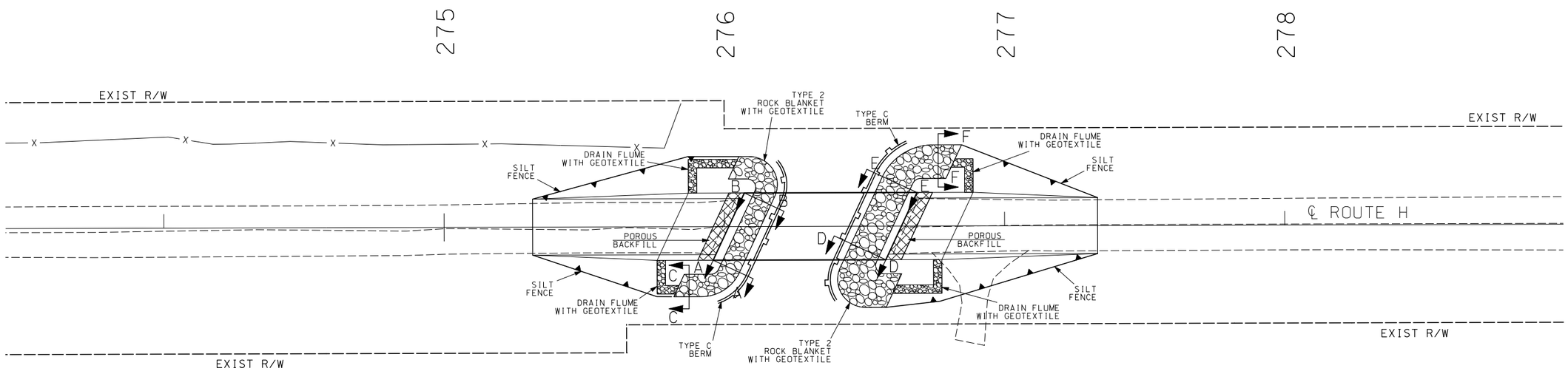

SEC	STA	ELEV TOP	ELEV BOTTOM	ELEV BACK		SLOPE FORE	SLOPE BACK		BERM WIDTH	PLAN WIDTH	SLOPE WIDTH
A-A	275+99	327.0	323.0	-	-	2.0:1	-	-	-	8.0'	8.9'
B-B	276+10	327.0	323.0	-	-	2.0:1	-	-	-	8.0'	8.9'
C-C	275+87	330.0	328.0	-	-	4.0:1	-	-	-	8.0'	8.9'

SEC	STA	ELEV TOP	ELEV BOTTOM	ELEV BACK		SLOPE FORE	SLOPE BACK		BERM WIDTH	PLAN WIDTH	SLOPE WIDTH
D-D	276+55	327.0	323.0	-	-	2.0:1	-	-	4.0'	12.0'	13.3'
E-E	276+66	327.0	323.0	-	-	2.0:1	-	-	4.0'	12.0'	13.3'
F-F	276+76	330.5	328.0	-	-	3.2:1	-	-	4.0'	12.0'	13.3'

STATION/OFFSET, ELEVATIONS, AND SLOPES ARE APPROXIMATE AND MAY BE ADJUSTED TO MATCH FIELD CONDITIONS AS APPROVED BY ENGINEER.

SEE STANDARD 609.40 FOR DRAIN FLUME DETAILS, GRADE DRAIN FLUMES TO FLOW TO ROCK BLANKET

GRADING FOR ROCK BLANKET AND DRAIN FLUME CONSTRUCTION (PAID AS LINEAR GRADING)

SEE BRIDGE PLANS FOR GRADING LIMITS UNDER BRIDGE (PAID AS LINEAR GRADING)

DITCH CHECKS SHOULD BE PLACED AS APPROVED BY ENGINEER

SCALE

0 20 40 60

SPECIAL SHEET 1 OF 1

STATE OF MISSOURI
ERIC KRAPF
NUMBER E-30103
PROFESSIONAL ENGINEER

THIS SHEET HAS BEEN SIGNED, SEALED AND DATED ELECTRONICALLY.

DATE PREPARED 10/3/2016

ROUTE	STATE
H	MO
DISTRICT	SHEET NO.
SE	8

COUNTY STODDARD

JOB NO. J9S3145

CONTRACT ID.

PROJECT NO.

BRIDGE NO.

DATE	DESCRIPTION

MISSOURI HIGHWAYS AND TRANSPORTATION COMMISSION

105 WEST CAPITOL
JEFFERSON CITY, MO 65102
1-888-ASK-MODOT (1-888-275-6636)

IF A SEAL IS PRESENT ON THIS SHEET IT HAS BEEN ELECTRONICALLY SEALED AND DATED.

SEC 14 TWP 24N RGE 9E

(58′) PRESTRESSED CONCRETE I-GIRDER SPAN

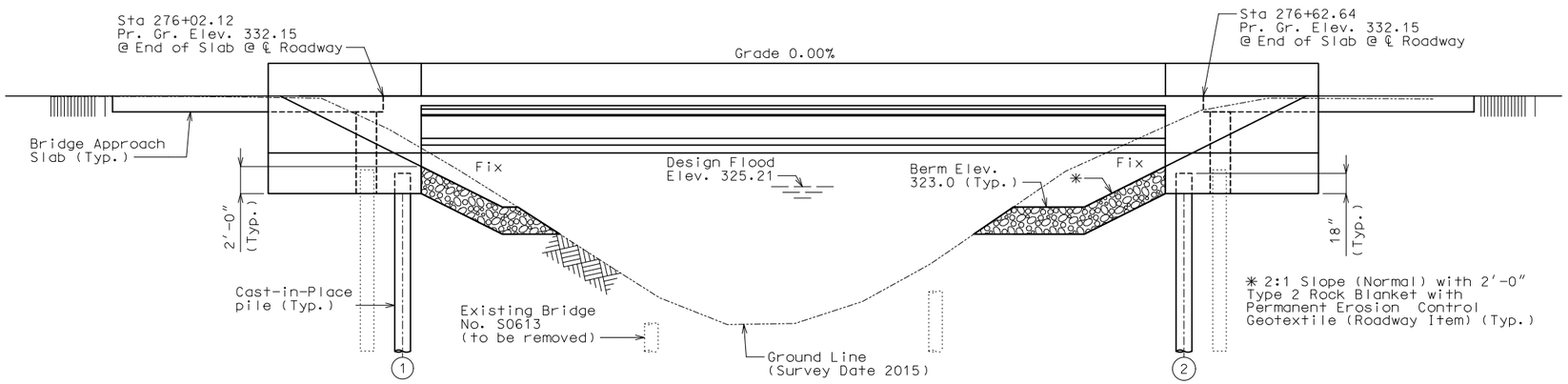

GENERAL ELEVATION

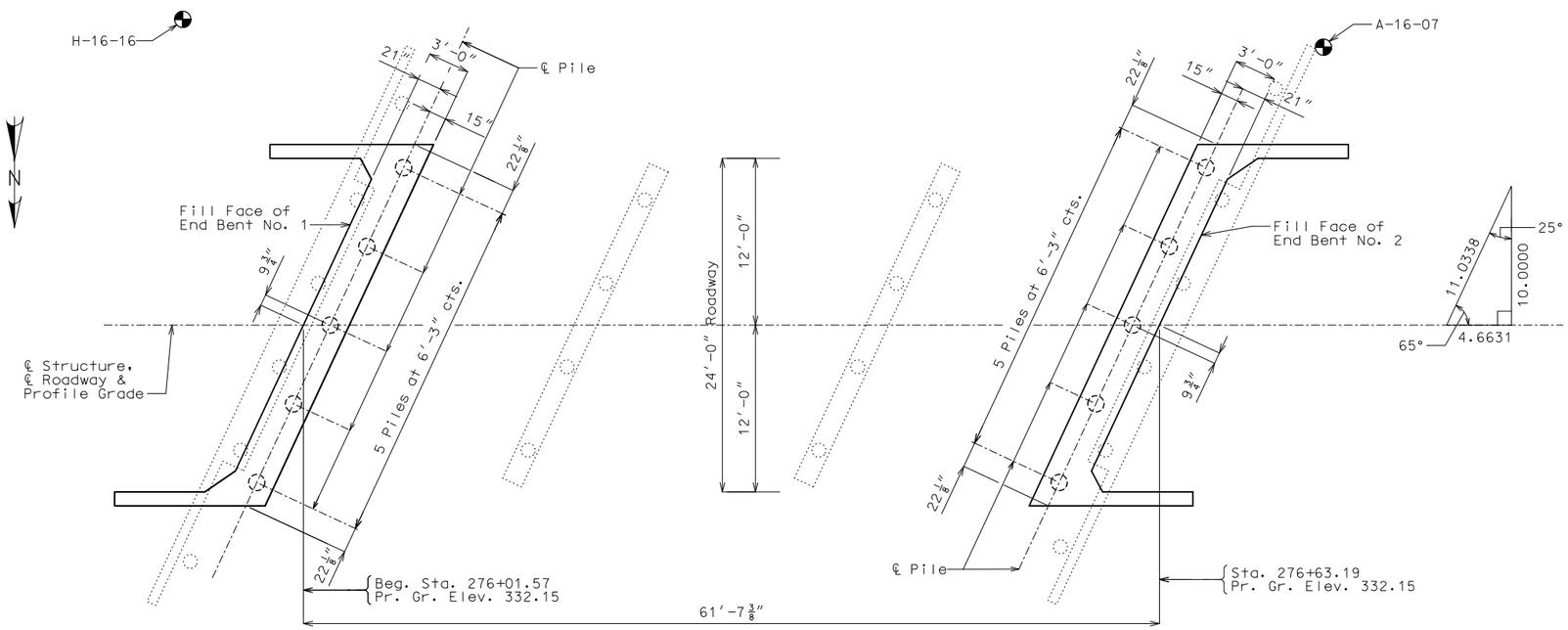

"◐" Indicates location of borings.

Notice and Disclaimer Regarding Boring Log Data

The locations of all subsurface borings for this structure are shown on the plan sheet(s) for this structure. The boring data for all locations indicated, as well as any other boring logs or other factual records of subsurface data and investigations performed by the department for the design of the project, are shown on Sheet(s) No. 20-21 or will be available from the Project Contact upon written request. No greater significance or weight should be given to the boring data depicted on the plan sheets than is given to the subsurface data available from the district or elsewhere.

The Commission does not represent or warrant that any such boring data accurately depicts the conditions to be encountered in constructing this project. A contractor assumes all risks it may encounter in basing its bid prices, time or schedule of performance on the boring data depicted here or those available from the district, or on any other documentation not expressly warranted, which the contractor may obtain from the Commission.

SPAN (1-2)

PLAN

Notes:

For General Notes, Foundation Data, Estimated Quantities, Estimated Quantities for Slab on Concrete I-Girder, Location Sketch and Hydrologic data, see Sheet No. 2.

Roadway fill shall be completed to the final roadway section and up to the elevation of the bottom of the concrete beam within the limits of the structure and for not less than 25 feet in back of the fill face of the end bents before any piles are driven for any bents falling within the embankment section.

BM #2 - □ W END N WHEELGUARD 10.41′
RT OF ℄ RTE H STA 276+60.08 ELEV 332.70

BM #3 - CPS N ROOT 30″ CHERRY TREE 43.50′
LT OF ℄ RTE H STA 276+00.69 ELEV 330.06

BRIDGE: ROUTE H OVER COUNTY DRAINAGE DITCH

ROUTE H FROM ROUTE 25 TO COUNTY LINE

ABOUT 5.2 MILES WEST OF ROUTE 25

STA. 276+01.57

STD. 609.00
STD. 617.10
STD. 706.35

Detailed JUL 2016
Checked JUL 2016

Note: This drawing is not to scale. Follow dimensions.

STATE OF MISSOURI — CHRIS LINNEMAN — NUMBER PE-2002016690 — REGISTERED PROFESSIONAL ENGINEER

THIS SHEET HAS BEEN SIGNED, SEALED AND DATED ELECTRONICALLY.

DATE PREPARED 9/19/2016	
ROUTE H	STATE MO
DISTRICT BR	SHEET NO. 1
COUNTY STODDARD	
JOB NO. J9S3145	
CONTRACT ID.	
PROJECT NO.	
BRIDGE NO. A8474	

DESCRIPTION	DATE

IF A SEAL IS PRESENT ON THIS SHEET IT HAS BEEN ELECTRONICALLY SEALED AND DATED

MISSOURI HIGHWAYS AND TRANSPORTATION COMMISSION
105 WEST CAPITOL
JEFFERSON CITY, MO 65102
1-888-ASK-MODOT (1-888-275-6636)

EFK·Moen, LLC
Civil Engineering Design
13523 Barrett Parkway Dr
Suite 250
St. Louis, MO 63021
Phone 314-394-3100
Missouri Certificate of Authority: 001578

REV.

Estimated Quantities

Item		Substr.	Superstr.	Total
Class 1 Excavation	cu. yard	80		80
Removal of Bridges (S0613)	lump Sum			1
Bridge Approach Slab (Minor Road)	sq. yard		113	113
Galvanized Cast-In-Place Concrete Piles (14in)	linear foot	260		260
Dynamic Pile Testing	each	2		2
Dynamic Pile Restrike Testing	each	2		2
Class B Concrete (Substructure)	cu. yard	23.6		23.6
Slab on Concrete I-Girder	sq. yard		175	175
✳ Barrier Curb	linear foot		156	156
Type 3 (39in.), Prestressed Concrete I-Girder	linear foot		177	177
Steel Intermediate Diaphragm for P/S Concrete Girders	each		2	2
Slab Drain	each		10	10
Vertical Drain at End Bents	each			2
Plain Neoprene Bearing Pad	each		6	6

✳ Barrier curb shall be cast-in-place option or slip-form option.

All concrete above the construction joint in the end bents is included in the Estimated Quantities for Slab on Concrete I-Girder.

All reinforcement in the end bents is included in the Estimated Quantities for Slab on Concrete I-Girder.

All reinforcement in cast-in-place piling at end bents is included in the superstructure quantities.

Estimated Quantities for Slab on Concrete I-Girder

Item		Total
Class B-2 Concrete	cu. yard	61.9
Reinforcing Steel	pound	6,660
Reinforcing Steel (Epoxy Coated)	pound	9,210

The table of Estimated Quantities for Slab on Concrete I-Girder represents the quantities used by the State in preparing the cost estimate for concrete slabs. The area of the concrete slab will be measured to the nearest square yard longitudinally from end of slab to end of slab and transversely from out to out of bridge slab (or with the horizontal dimensions as shown on the plan of slab). Payment for prestressed panels, conventional forms, all concrete and coated and uncoated reinforcing steel will be considered completely covered by the contract unit price for the slab. Variations may be encountered in the estimated quantities but the variations cannot be used for an adjustment in the contract unit price.

Method of forming the slab shall be as shown on the plans and in accordance with Sec 703. All hardware for forming the slab to be left in place as a permanent part of the structure shall be coated in accordance with ASTM A123 or ASTM B633 with a thickness class SC 4 and a finish type I, II or III.

The Estimated Quantities for Slab on Concrete I-Girder are based on skewed precast prestressed end panels.

Class B-2 Concrete quantity is based on minimum top flange thickness and minimum joint material thickness.

The prestressed panel quantities are not included in the table of Estimated Quantities for Slab on Concrete I-Girder

FOUNDATION DATA

Type	Design Data		Bent Number 1	Bent Number 2
Load Bearing Pile	Pile Type and Size		CIP 14"	CIP 14"
	CIP Type		Foundation	Foundation
	Number	ea	5	5
	Approximate Length per Each	ft	27	25
	Pile Driving Verification Method		DT	DT
	Minimum Nominal Axial Compressive Resistance	kip	248	248
	Minimum Tip Penetration (elev.)	ft	300.30	304.70
	Criteria for Minimum Tip Penetration		Lateral Stability	Scour
	Hammer Energy Required	ft-lb	8,000	8,000

DT = Dymamic Testing

Minimum Nominal Axial Compressive Resistance = Maximum Factored Loads/Resistance Factor

General Notes:

Design Specifications:

2012 AASHTO LRFD Bridge Design Specifications (6th Ed.) and
2013 Interim Revisions
2011 AASHTO Guide Specifications for LRFD Seismic Bridge Design
(2nd Ed.) and 2014 Interim Revisions (Seismic Details)
Seismic Design Category = B

Design Loading:

Vehicular = HL-93
Future Wearing Surface = 35lb/sf
Earth = 120 lb/cf
Equivalent Fluid Pressure = 45 lb/cf (minimum)
Superstructure: Non-composite for dead load.
Composite for live load.

Design Unit Stresses:

Class B Concrete (Substructure, except CIP Piles)	f'c = 3,000 psi
Class B-1 Concrete (Barrier Curb & CIP Piles)	f'c = 4,000 psi
Class B-2 Concrete (Superstructure, except Prestressed Girders and Barrier curb)	f'c = 4,000 psi
Reinforcing Steel (Grade 60)	fy = 60,000 psi
Steel Pipe Pile (ASTM A252 Grade 3)	fy = 45,000 psi

For precast prestressed panel stresses, see Sheet No. 10.

For prestressed girder stresses, see Sheet No. 8.

Neoprene Pads:

Plain Neoprene Bearing Pads shall be 60 durometer and shall be in accordance with Sec 716.

Joint Filler:

All joint filler shall be in accordance with Sec 1057 for preformed sponge rubber expansion and partition joint filler, except as noted.

Reinforcing Steel:

Minimum clearance to reinforcing steel shall be $1\frac{1}{2}$", unless otherwise shown.

Traffic Handling:

Structure to be closed during construction. Traffic to be maintained on other routes. See roadway plans for traffic control.

Miscellaneous:

Outline of old work is indicated by light dashed lines. Heavy lines indicated new work.

MoDOT Construction personnel will indicate the type of joint filler option used under the precast panels for this structure:

☐ Constant Joint Filler

☐ Variable Joint Filler

Hydrologic Data

Drainage Area = 6.6 (sq. mi.)
Design Flood Frequency = 50 (year)
Design Flood Discharge = 520 (cfs)
Design High Water (D.F.) Elev. = 325.21

Base Flood (100-Year)

Base Flood Elevation = 325.49
Base Flood Discharge = 550 (cfs)
Estimated Backwater = 0.0 (ft)
Average Velocity thru Opening = 2.14 (ft/sec)

Freeboard (50-Year)

Freeboard = 2.49 (ft)

Roadway Overtopping

Overtopping Flood Discharge > 620 (cfs)
Overtopping Flood Frequency > 500 (year)
Design Elevation = 330.95

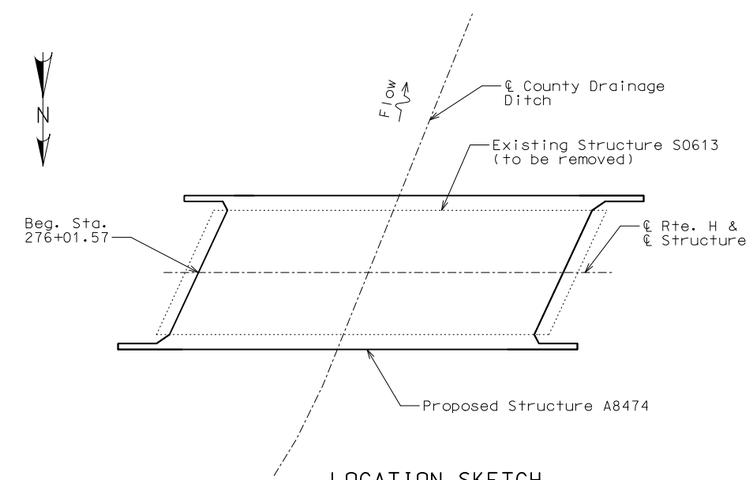

LOCATION SKETCH

GENERAL NOTES AND QUANTITIES

Detailed JUL 2016
Checked JUL 2016

Note: This drawing is not to scale. Follow dimensions.

STATE OF MISSOURI
CHRIS LINNEMAN
NUMBER PE-2002016690
REGISTERED PROFESSIONAL ENGINEER
THIS SHEET HAS BEEN SIGNED, SEALED AND DATED ELECTRONICALLY.

DATE PREPARED 9/19/2016
ROUTE H | STATE MO
DISTRICT BR | SHEET NO. 2
COUNTY STODDARD
JOB NO. J9S3145
CONTRACT ID.
PROJECT NO.
BRIDGE NO. A8474

DATE	DESCRIPTION

IF A SEAL IS PRESENT ON THIS SHEET IT HAS BEEN ELECTRONICALLY SEALED AND DATED

MISSOURI HIGHWAYS AND TRANSPORTATION COMMISSION
105 WEST CAPITOL
JEFFERSON CITY, MO 65102
1-888-ASK-MODOT (1-888-275-6636)

EFK•Moen, LLC
Civil Engineering Design
13523 Barrett Parkway Dr
Suite 250
St. Louis, MO 63021
Phone 314-394-3100
Missouri Certificate of Authority: 001578

REV.

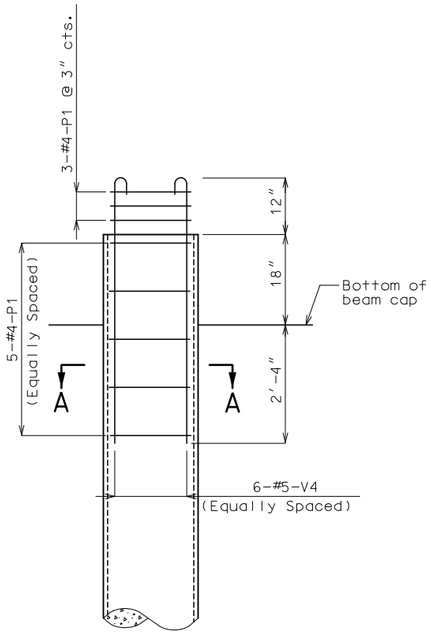

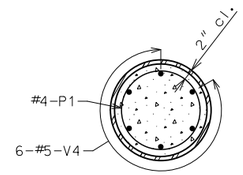

SECTION A-A

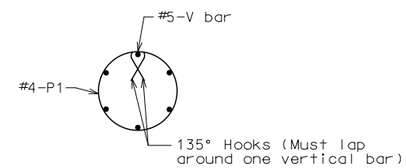

DETAIL OF SEISMIC
STIRRUP BAR

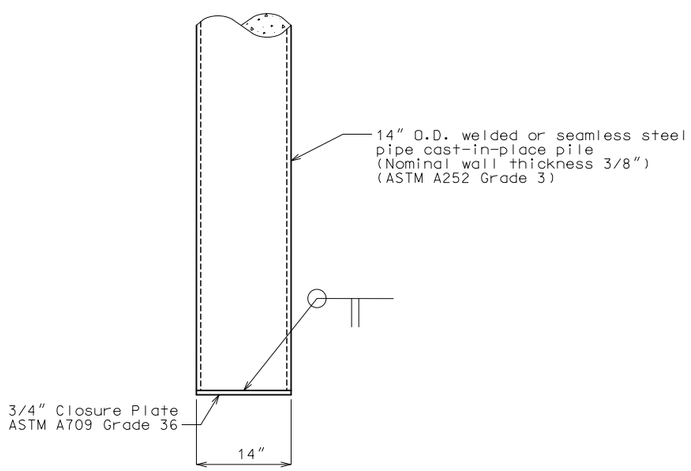

WELDED OR SEAMLESS STEEL PIPE
CAST-IN-PLACE PILE

Notes:

All concrete for cast-in-place piles shall be Class B-1.

The minimum wall thickness of any spot or local area of any type shall not be more than 12.5% under the specified nominal wall thickness.

Closure plates shall be required for tips of pipe piles and shall not project beyond the outside diameter of the pipe piles. Satisfactory weldments may be made by beveling tip ends of pipe or by use of inside backing rings. In either case, proper gaps shall be used to obtain weld penetration full thickness of pipe. Payment for furnishing and installing closure plates will be considered completely covered by the contract unit price for Cast-in-Place Concrete Piles.

All splices of shells for cast-in-place concrete piles shall be made watertight and to the full strength of the shell above and below the splice to permit hard driving without damage. All shells damaged during driving shall be replaced without cost to the State. Shell sections used for splicing shall be at least 5'-0" in length. The splice at the tapered section shall be at least 3'-0" below the streambed for intermediate trestle type bents.

At the contractor's option, the hooks of V-Bars embedded in the beam cap may be oriented inward or outward for Seismic Category A. Bending the hook outward, away from the column core, is not allowed for Seismic Category B, C, or D.

All closed end cast in place piles shall be galvanized to the minimum galvanize elevation in accordance with Bridge Special Provisions.

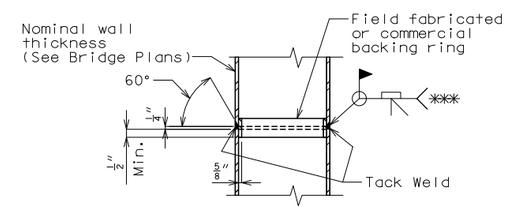

STEEL PIPE PILE SPLICE

*** Galvanization material shall be removed for a minimum of 2" around weld locations. The method used for removing galvanizing material shall be as approved by the Engineer.

Galvanizing shall be repaired by hot-stick zinc alloy method.

DETAILS OF CAST-IN-PLACE PILE

Detailed JUL 2016
Checked JUL 2016

Note: This drawing is not to scale. Follow dimensions.

STATE OF MISSOURI
CHRIS LINNEMAN
NUMBER
PE-2002016690
REGISTERED PROFESSIONAL ENGINEER
THIS SHEET HAS BEEN SIGNED, SEALED AND DATED ELECTRONICALLY.

DATE PREPARED 9/19/2016	
ROUTE H	STATE MO
DISTRICT BR	SHEET NO. 3
COUNTY STODDARD	
JOB NO. J9S3145	
CONTRACT ID.	
PROJECT NO.	
BRIDGE NO. A8474	

DATE	DESCRIPTION

IF A SEAL IS PRESENT ON THIS SHEET IT HAS BEEN ELECTRONICALLY SEALED AND DATED

MISSOURI HIGHWAYS AND TRANSPORTATION COMMISSION
105 WEST CAPITOL
JEFFERSON CITY, MO 65102
1-888-ASK-MODOT (1-888-275-6636)

EFK•Moen, LLC
Civil Engineering Design
13523 Barrett Parkway Dr
Suite 250
St. Louis, MO 63021 Phone 314-394-3100
Missouri Certificate of Authority: 001578

REV.

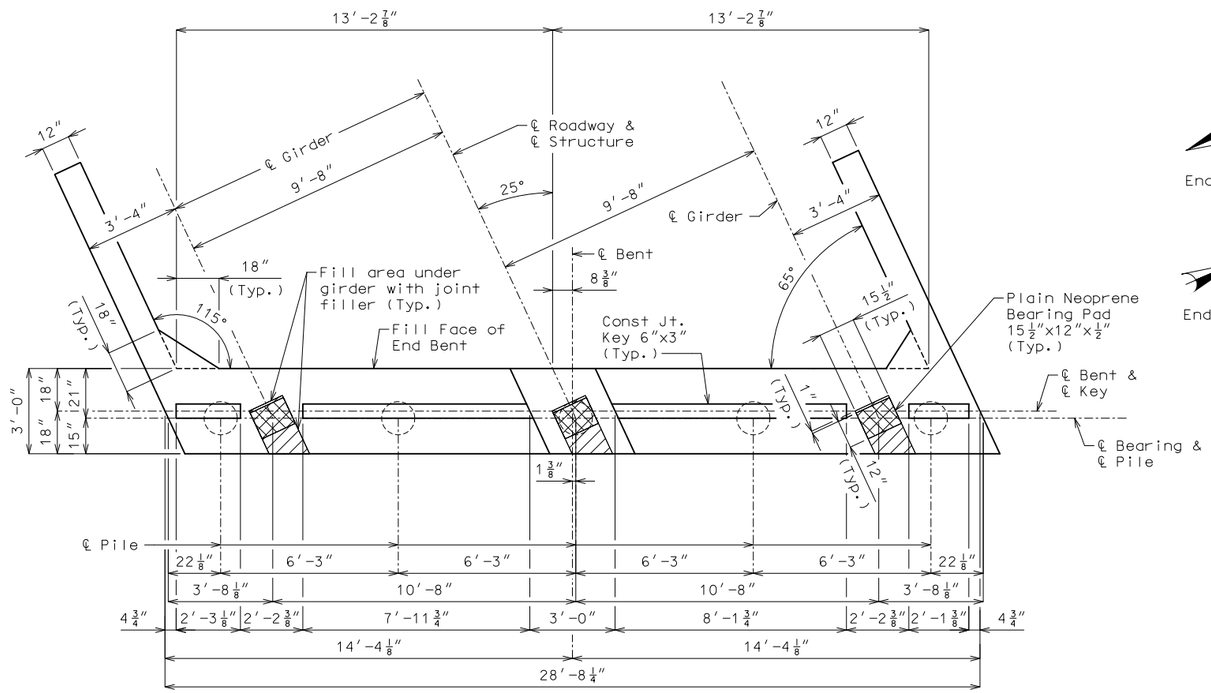

PLAN OF BEAM SHOWING DIMENSIONS

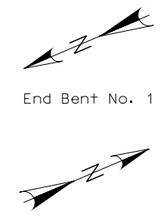

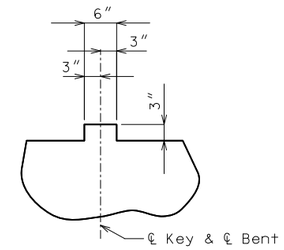

TYPICAL SECTION
THRU KEY

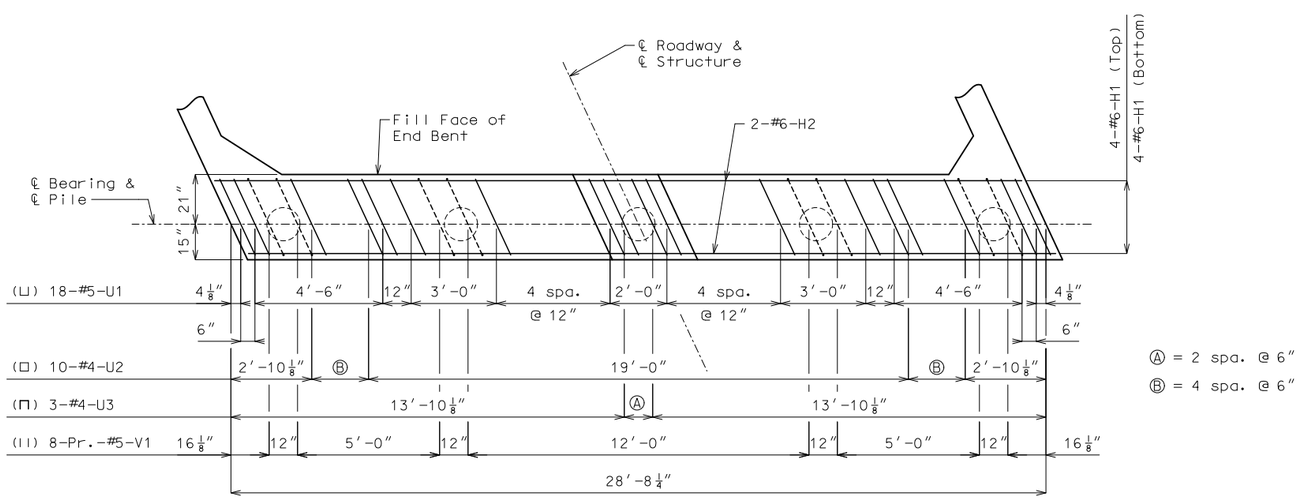

Ⓐ = 2 spa. @ 6"

Ⓑ = 4 spa. @ 6"

PLAN OF BEAM SHOWING REINFORCEMENT
Keys not shown for clarity.

Notes:

For details of End Bent not shown, see Sheets No. 5 & 6.

All U-bars and V-bars in End Bent are to be placed parallel to ℄ Roadway.

For Substructure Quantity Table for End Bents No. 1 & 2, See Sheet No. 5.

For details of Vertical Drain at End Bents, see Sheet No. 7.

Reinforcing steel shall be shifted to clear piles. U bars shall clear piles by at least 1 1/2".

Reinforcement in wing in Plan of Beam not shown for clarity.

DETAILS OF END BENTS NO. 1 & 2

Detailed JUL 2016
Checked JUL 2016

Note: This drawing is not to scale. Follow dimensions.

STATE OF MISSOURI
CHRIS LINNEMAN
NUMBER PE-2002016690
REGISTERED PROFESSIONAL ENGINEER
THIS SHEET HAS BEEN SIGNED, SEALED AND DATED ELECTRONICALLY.

DATE PREPARED	
9/19/2016	
ROUTE H	STATE MO
DISTRICT BR	SHEET NO. 4
COUNTY STODDARD	
JOB NO. J9S3145	
CONTRACT ID.	
PROJECT NO.	
BRIDGE NO. A8474	

DATE	DESCRIPTION

IF A SEAL IS PRESENT ON THIS SHEET IT HAS BEEN ELECTRONICALLY SEALED AND DATED

MISSOURI HIGHWAYS AND TRANSPORTATION COMMISSION
105 WEST CAPITOL
JEFFERSON CITY, MO 65102
1-888-ASK-MODOT (1-888-275-6636)

EFK•Moen, LLC
Civil Engineering Design
13523 Barrett Parkway Dr
Suite 250
St. Louis, MO 63021 Phone 314-394-3100
Missouri Certificate of Authority: 001578

REV.

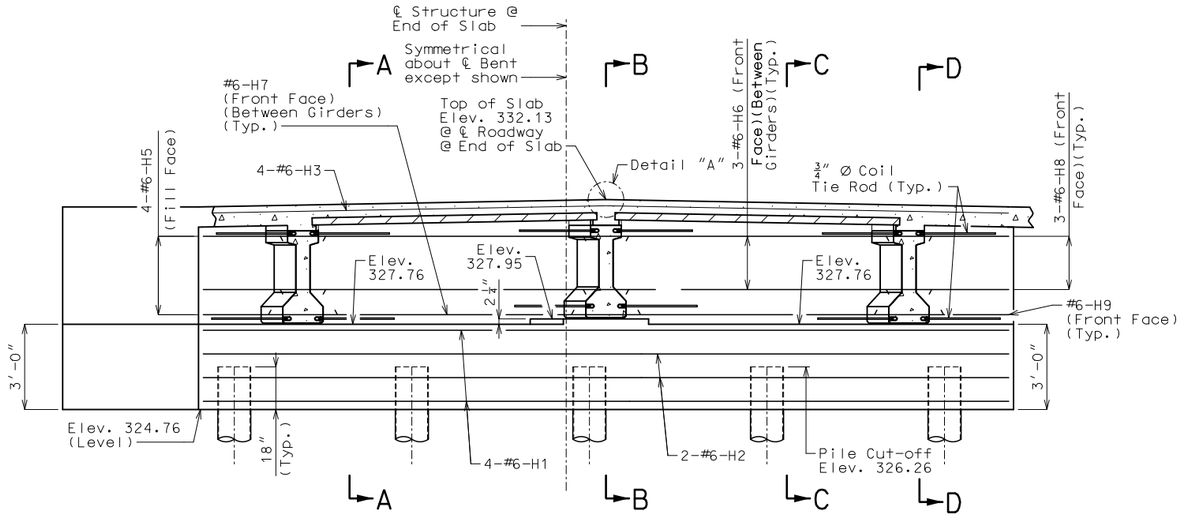

SECTION NEAR END BENT

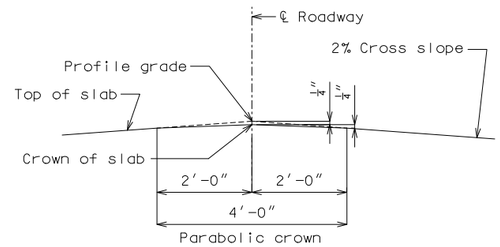

DETAIL "A"

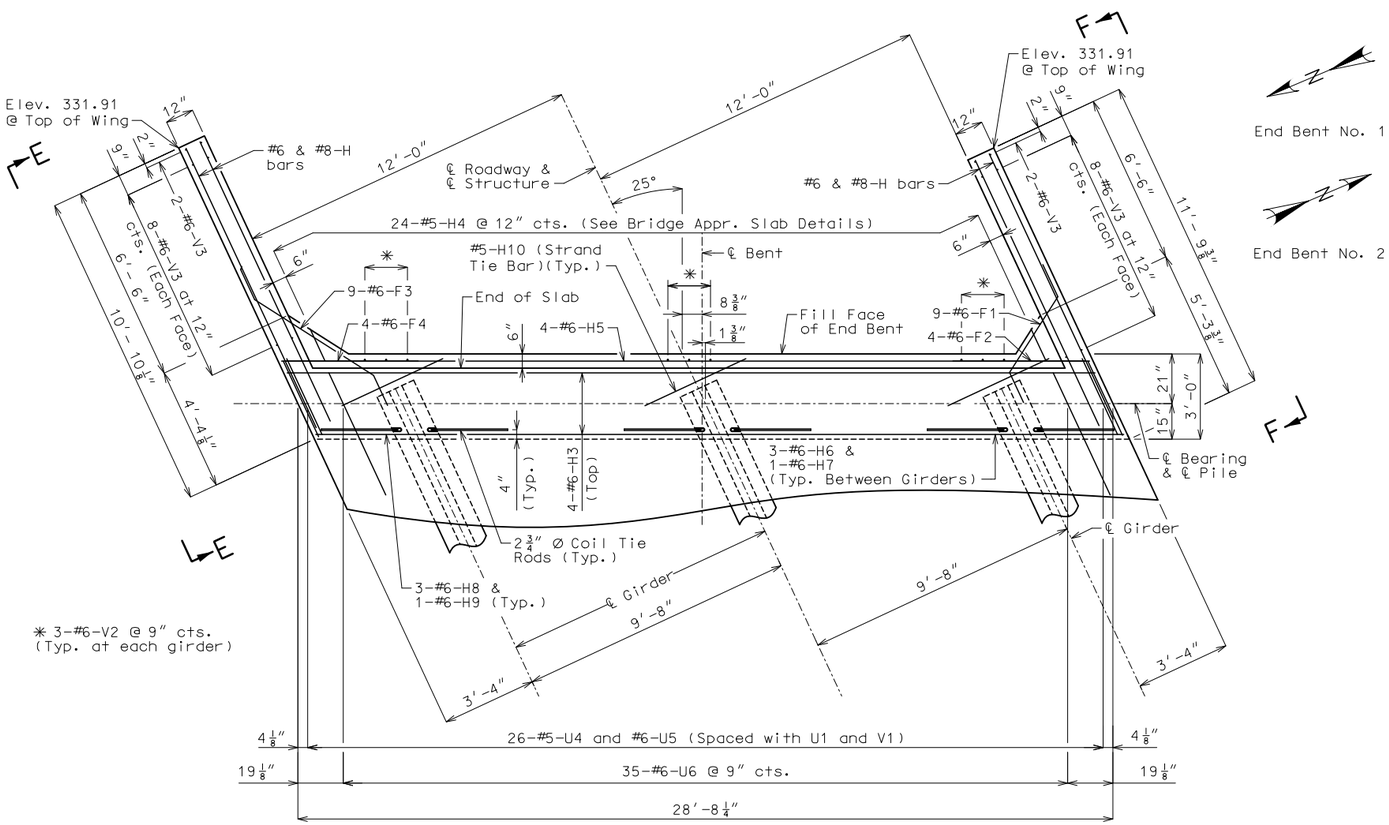

PART PLAN

End Bent No. 1

End Bent No. 2

Substructure Quantity Table for End Bent No. 1

Item		Total
Class 1 Excavation	cu. yard	40
Galvanized Cast-In-Place Concrete Piles (14 in.)	linear foot	135
Dynamic Pile Testing	each	1
Dynamic Pile Restrike Testing	each	1
Class B Concrete (Substructure)	cu. yard	11.8

Note: These quantities are included in the Estimated Quantities Table on Sheet No. 2.

Substructure Quantity Table for End Bent No. 2

Item		Total
Class 1 Excavation	cu. yard	40
Galvanized Cast-In-Place Concrete Piles (14 in.)	linear foot	125
Dynamic Pile Testing	each	1
Dynamic Pile Restrike Testing	each	1
Class B Concrete (Substructure)	cu. yard	11.8

Note: These quantities are included in the Estimated Quantities Table on Sheet No. 2.

Notes:

For Elevations E-E & F-F, Sections A-A, B-B, C-C, D-D and Section Thru Wing, see Sheet No. 6.

For details of End Bent not shown, see Sheets No. 4 & 6.

For details of Vertical Drain at End Bent, see Sheet No. 7.

For details and reinforcement of barrier curb, see Sheet No. 15.

The #6-F1 & #6-F3 Bars shall be bent in the field to clear girders.

All concrete in the end bent above top of beam and below top of slab shall be Class B-2.

Strands at end of the girders shall be field bent or, if necessary, cut in field to maintain 1½" minimum clearance to fill face of end bent.

For locations of Coil Tie Rods and #5-H10 (Strand Tie Bar), see Sheet No. 8.

The U bars and #5-H4 bars shall be placed parallel to ℄ Roadway.

For details of Approach Slab, see Sheet No. 17.

DETAILS OF END BENTS NO. 1 & 2

Detailed JUL 2016
Checked JUL 2016

Note: This drawing is not to scale. Follow dimensions.

STATE OF MISSOURI
CHRIS LINNEMAN
NUMBER PE-2002016690
REGISTERED PROFESSIONAL ENGINEER
THIS SHEET HAS BEEN SIGNED, SEALED AND DATED ELECTRONICALLY.

IF A SEAL IS PRESENT ON THIS SHEET IT HAS BEEN ELECTRONICALLY SEALED AND DATED

DATE PREPARED	
9/19/2016	
ROUTE: H	STATE: MO
DISTRICT: BR	SHEET NO.: 5
COUNTY: STODDARD	
JOB NO.: J9S3145	
CONTRACT ID.	
PROJECT NO.	
BRIDGE NO.: A8474	

DATE	DESCRIPTION

MISSOURI HIGHWAYS AND TRANSPORTATION COMMISSION
105 WEST CAPITOL
JEFFERSON CITY, MO 65102
1-888-ASK-MODOT (1-888-275-6636)

EFK•Moen, LLC
Civil Engineering Design
13523 Barrett Parkway Dr
Suite 250
St. Louis, MO 63021
Phone 314-394-3100
Missouri Certificate of Authority: 001578

REV.

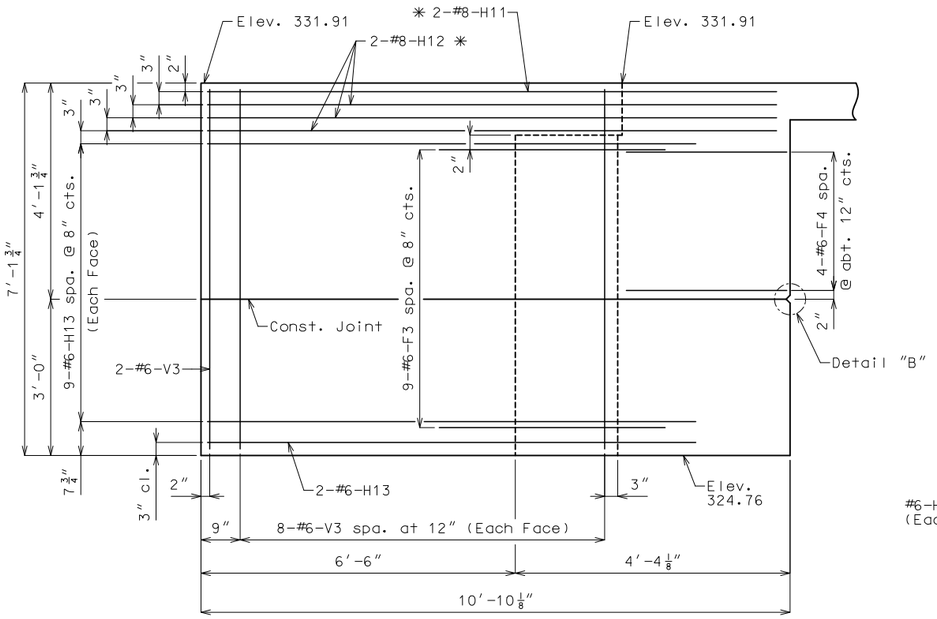

ELEVATION E-E

(Northeast Wingwall shown, Southwest Wingwall similar)

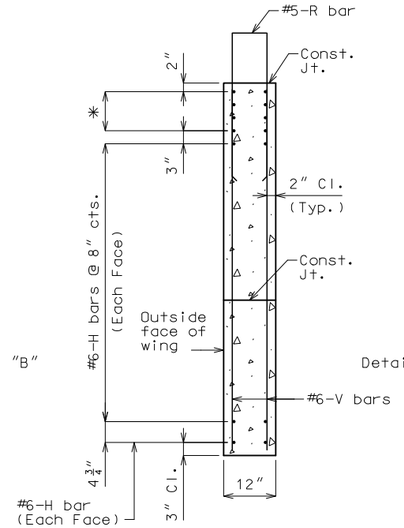

TYPICAL SECTION THRU WING

✱ #8-H bars at 3" cts. (Each Face) (Typ.)

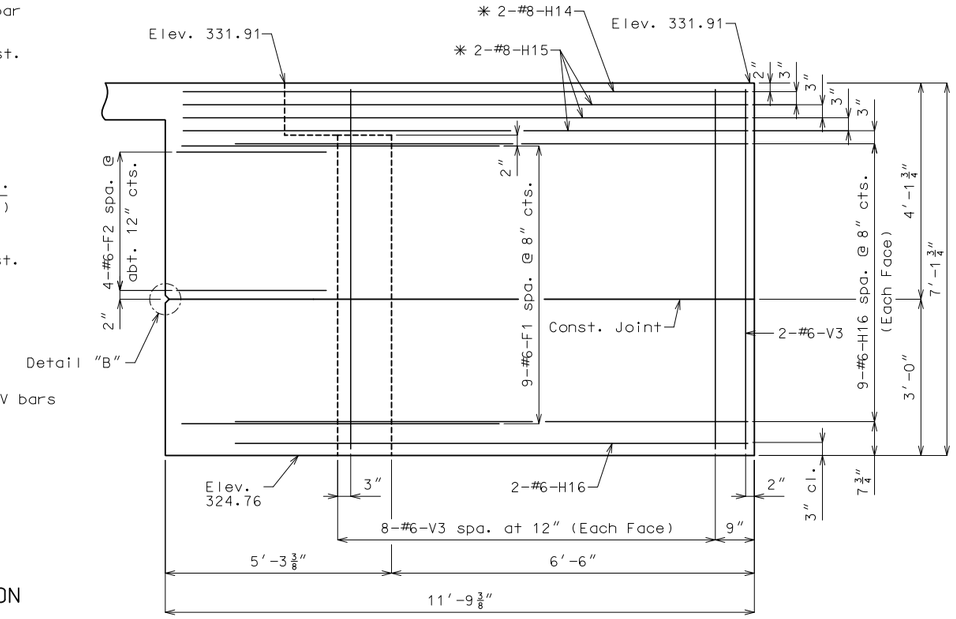

ELEVATION F-F

(Southeast Wingwall shown, Northwest Wingwall similar)

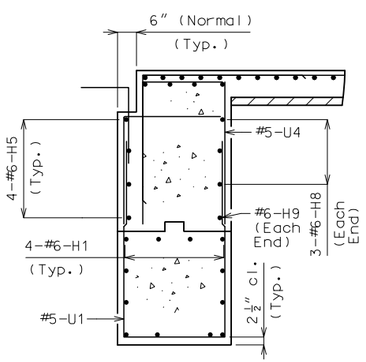

SECTION A-A

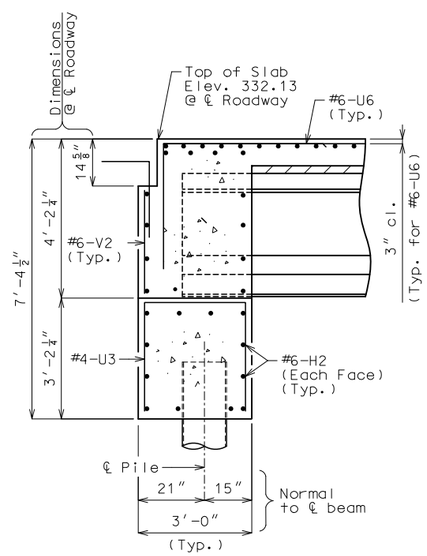

SECTION B-B

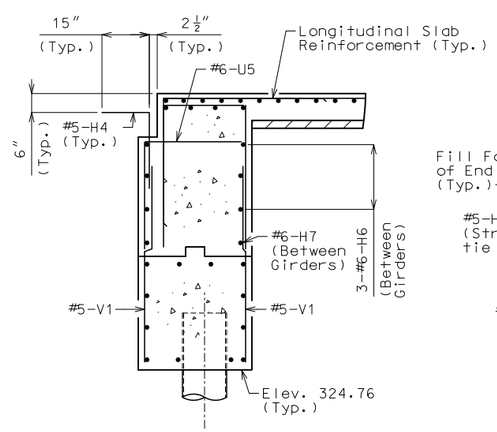

SECTION C-C

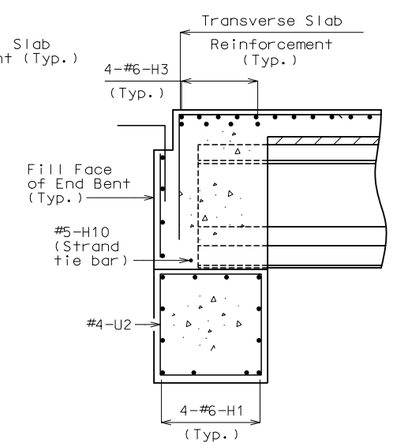

SECTION D-D

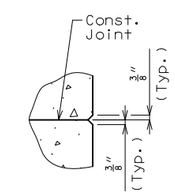

DETAIL "B"

Notes:

For details of End Bent not shown, see Sheets No. 4 & 5.

For details and reinforcemnet of safety barrier curb not shown, see Sheet No. 15.

For Location of Sections A-A, B-B, C-C, & D-D, and Elevations E-E & F-F, see Sheet No. 5.

DETAILS OF END BENTS NO. 1 & 2

Detailed JUL 2016
Checked JUL 2016

Note: This drawing is not to scale. Follow dimensions.

STATE OF MISSOURI
CHRIS LINNEMAN
NUMBER PE-2002016690
REGISTERED PROFESSIONAL ENGINEER
THIS SHEET HAS BEEN SIGNED, SEALED AND DATED ELECTRONICALLY.

DATE PREPARED	9/19/2016
ROUTE	H
STATE	MO
DISTRICT	BR
SHEET NO.	6
COUNTY	STODDARD
JOB NO.	J9S3145
CONTRACT ID.	
PROJECT NO.	
BRIDGE NO.	A8474

DATE	DESCRIPTION

MISSOURI HIGHWAYS AND TRANSPORTATION COMMISSION
105 WEST CAPITOL
JEFFERSON CITY, MO 65102
1-888-ASK-MODOT (1-888-275-6636)

EFK•Moen, LLC
Civil Engineering Design
13523 Barrett Parkway Dr
Suite 250
St. Louis, MO 63021
Phone 314-394-3100
Missouri Certificate of Authority: 001578

IF A SEAL IS PRESENT ON THIS SHEET IT HAS BEEN ELECTRONICALLY SEALED AND DATED

REV.

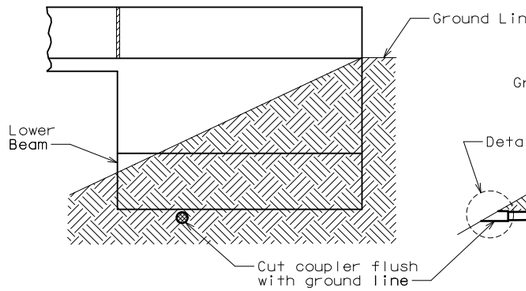

ELEVATION OF WING

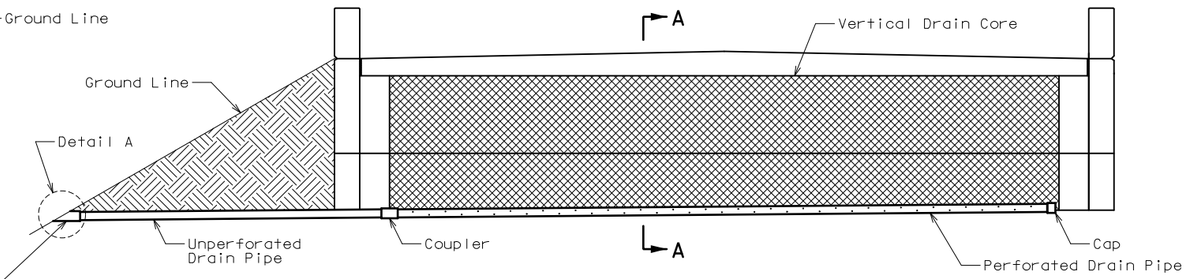

ELEVATION AT END BENT

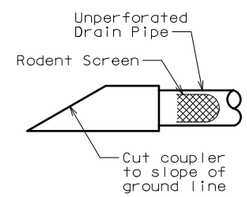

DETAIL A

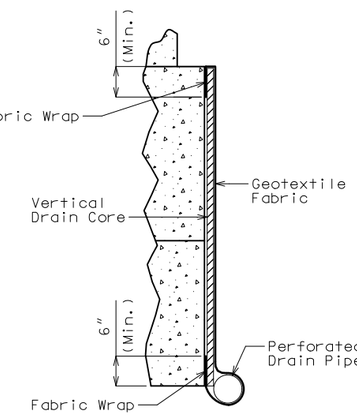

PART SECTION A-A

Note:

Drain pipe may be either 6-inch diameter corrugated metallic-coated steel pipe underdrain, 4-inch diameter corrugated polyvinyl chloride (PVC) drain pipe, or 4-inch diameter corrugated polyethylene (PE) drain pipe.

Place drain pipe at fill face of end bent and slope to lowest grade of ground line, also missing the lower beam of end bent by 1 1/2 inches. (See Elevation at End Bent.)

Perforated pipe shall be placed at fill face side at the bottom of end bent and plain pipe shall be used where the vertical drain ends to the exit at ground line.

VERTICAL DRAIN AT END BENTS

Detailed JUL 2016
Checked JUL 2016

Note: This drawing is not to scale. Follow dimensions.

STATE OF MISSOURI
CHRIS LINNEMAN
NUMBER PE-2002016690
REGISTERED PROFESSIONAL ENGINEER

THIS SHEET HAS BEEN SIGNED, SEALED AND DATED ELECTRONICALLY.

DATE PREPARED	9/19/2016
ROUTE	H
STATE	MO
DISTRICT	BR
SHEET NO.	7
COUNTY	STODDARD
JOB NO.	J9S3145
CONTRACT ID.	
PROJECT NO.	
BRIDGE NO.	A8474

DATE	DESCRIPTION

IF A SEAL IS PRESENT ON THIS SHEET IT HAS BEEN ELECTRONICALLY SEALED AND DATED

MISSOURI HIGHWAYS AND TRANSPORTATION COMMISSION
105 WEST CAPITOL
JEFFERSON CITY, MO 65102
1-888-ASK-MODOT (1-888-275-6636)

EFK•Moen, LLC
Civil Engineering Design
13523 Barrett Parkway Dr
Suite 250
St. Louis, MO 63021 Phone 314-394-3100
Missouri Certificate of Authority: 001578

REV.

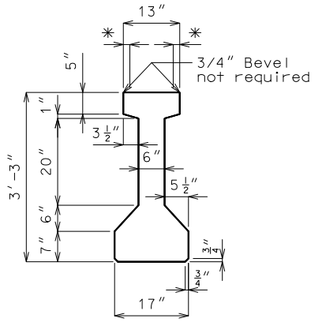

GIRDER DIMENSIONS

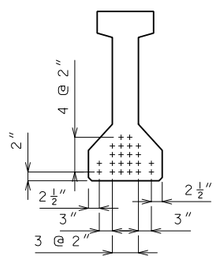

℄ GIRDER

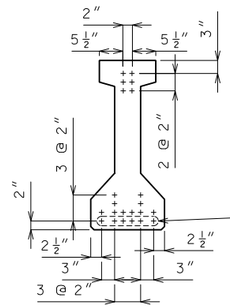

END OF GIRDER

STRAND ARRANGEMENTS

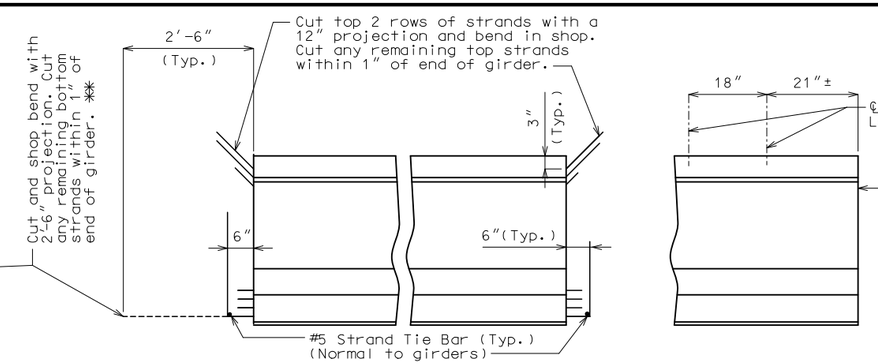

END BENT

STRAND DETAILS AT GIRDER ENDS

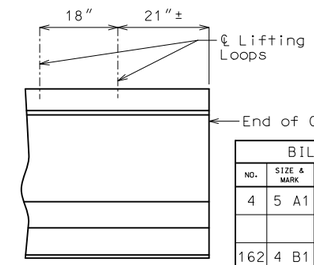

LOCATION OF LIFTING LOOPS

Fabricator shall be responsible for location and design of lifting devices.

Concrete for prestressed girders shall be Class A-1 with f'c = 8,000 psi and f'ci = 6,500 psi.

(+) indicates prestressing strand.

Use 22 strands with an initial prestress force of 682 kips.

Prestressing tendons shall be uncoated, seven-wire, low-relaxation strands, 1/2 inch diameter in accordance with AASHTO M 203, Grade 270. Pretensioned members shall be in accordance with Sec 1029.

✳ At contractor's option a 1 1/2" to 1 3/4" smooth finish strip is permitted to facilitate placement of preformed fiber expansion joint material or expanded or extruded polystyrene bedding material for the prestressed panels.

✳✳ At the contractor's option the location for bent-up strands may be varied from that shown for fully bonded strands only. The total number of bent-up strands shall not be changed. One strand tie bar is required for each layer of bent-up strands except at end bents which require one bar on the bottom layer of strands only.

BILL OF REINFORCING STEEL - EACH GIRDER

NO.	SIZE & MARK	ACTUAL LENGTH	SHAPE
4	5 A1	31'-2"	20
162	4 B1	4'-8"	11
16	6 B2	4'-0"	11
89	4 C1	13"	10
178	4 D1	2'-5"	9

BENDING DIAGRAM

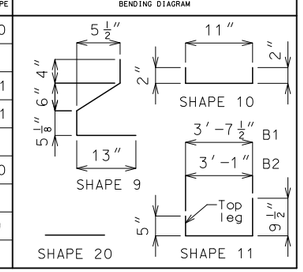

All dimensions are out to out.

Hooks and bends shall be in accordance with the CRSI Manual of Standard Practice for Detailing Reinforced Concrete Structures, Stirrup and Tie Dimensions.

Actual lengths are measured along centerline of bar to the nearest inch.

Minimum clearance to reinforcing shall be 1".

All reinforcement shall be Grade 60.

The two D1 bars may be furnished as one bar at the fabricator's option.

All B1 bars shall be epoxy coated.

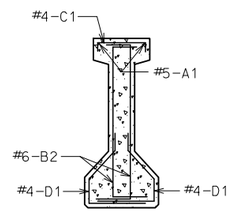

SECTION A-A

Strands not shown for clarity.

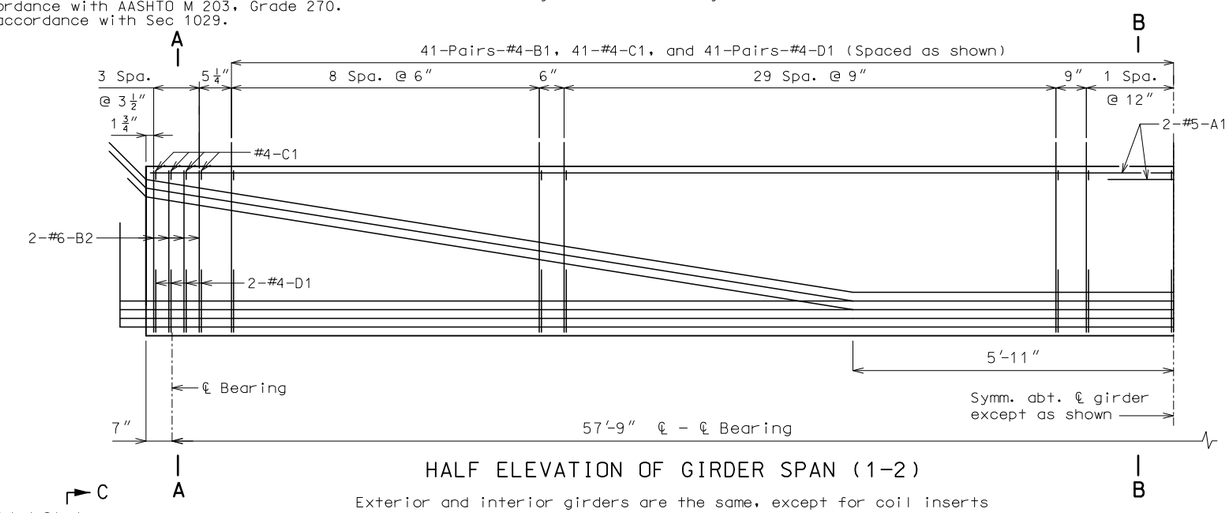

HALF ELEVATION OF GIRDER SPAN (1-2)

Exterior and interior girders are the same, except for coil inserts for slab drains and holes for steel intermediate diaphragms.

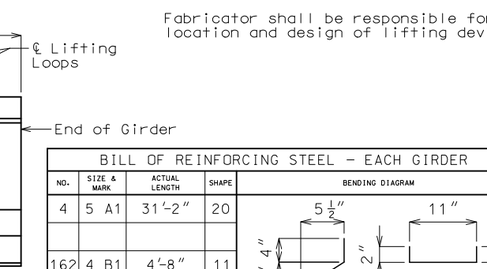

SECTION B-B

Strands not shown for clarity.

B1 BAR PERMISSIBLE ALTERNATE SHAPE

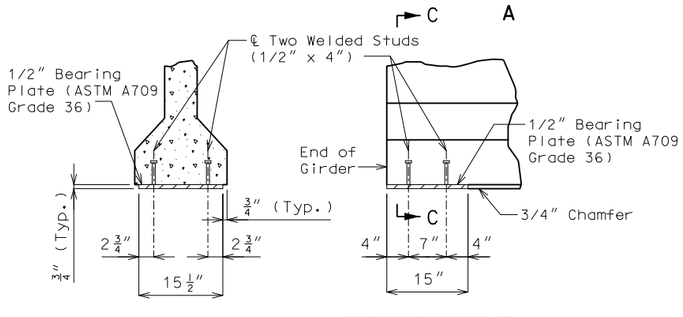

SECTION C-C

PART ELEVATION AT END OF GIRDER

BEARING PLATE DETAILS

Galvanize the 1/2" bearing plate (ASTM A709 Grade 36) in accordance with ASTM A123.

Cost of furnishing, galvanizing, and installing the 1/2" bearing plate (ASTM A709 Grade 36) and welded studs in the prestressed girder will be considered completely covered by the contract unit price for Prestressed Concrete I-Girder.

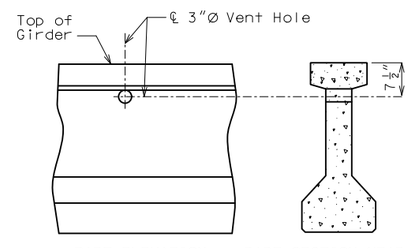

PART ELEVATION OF GIRDER

PART SECTION NEAR VENT HOLE

DETAILS OF VENT HOLE

Place vent holes at or near 1/3 point (only 1 required) of girders and clear reinforcing steel or strands by 1 1/2" minimum and steel intermediate diaphragm bolt connections by 6" minimum.

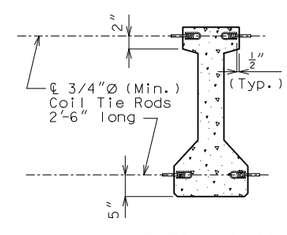

EXTERIOR GIRDERS AT END BENTS
INTERIOR GIRDERS AT ALL BENTS

DETAILS OF COIL TIES

Cost of 3/4"Ø coil tie rods placed in diaphragms will be considered completely covered by the contract unit price for Prestressed Concrete I-Girder.

Coil ties shall be held in place in the forms by slotted wire-setting-studs projecting through forms. Studs are to be left in place or replaced with temporary plugs until girders are erected, then replaced by coil tie rods.

For location of coil inserts at slab drains, see Sheet No. 11.

For location of coil ties, see Sheets No. 5.

The 1 1/2"Ø holes shall be cast in the web for steel intermediate diaphragms. Drilling is not allowed.

For details of diaphragms, see Sheet No. 9.

For Girder Camber Diagram, see Sheet No. 12.

STATE OF MISSOURI
CHRIS LINNEMAN
NUMBER PE-2002016690
REGISTERED PROFESSIONAL ENGINEER
THIS SHEET HAS BEEN SIGNED, SEALED AND DATED ELECTRONICALLY.

DATE PREPARED	
9/19/2016	
ROUTE: H	STATE: MO
DISTRICT: BR	SHEET NO.: 8
COUNTY: STODDARD	
JOB NO.: J9S3145	
CONTRACT ID.	
PROJECT NO.	
BRIDGE NO.: A8474	

DESCRIPTION | DATE

MISSOURI HIGHWAYS AND TRANSPORTATION COMMISSION
105 WEST CAPITOL
JEFFERSON CITY, MO 65102
1-888-ASK-MODOT (1-888-275-6636)

EFK·Moen, LLC
Civil Engineering Design
13523 Barrett Parkway Dr
Suite 250
St. Louis, MO 63021
Phone 314-394-3100
Missouri Certificate of Authority: 001578

IF A SEAL IS PRESENT ON THIS SHEET IT HAS BEEN ELECTRONICALLY SEALED AND DATED

REV.

Detailed JUL 2016
Checked JUL 2016

Note: This drawing is not to scale. Follow dimensions.

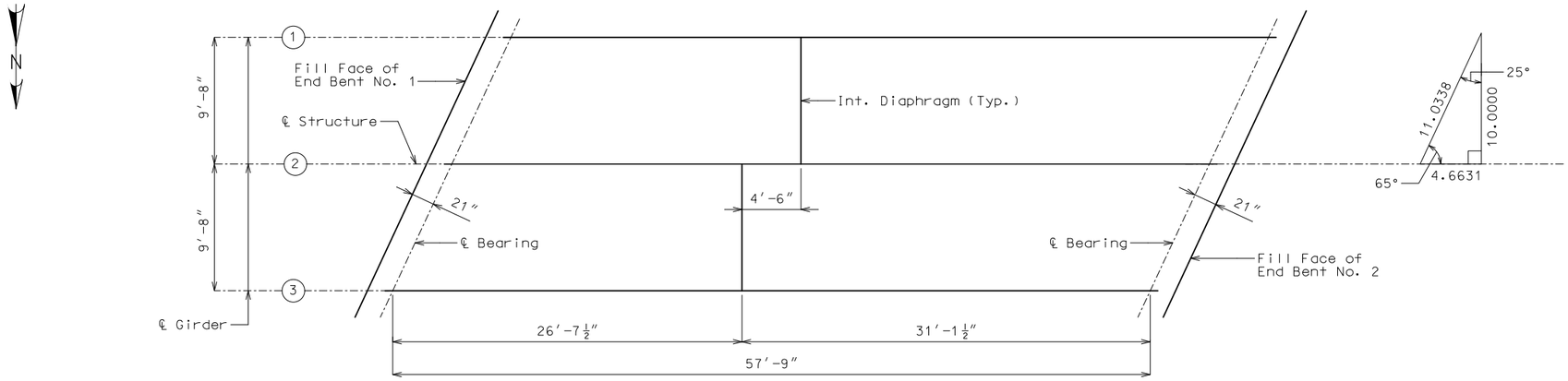

SPAN (1-2)

PLAN SHOWING LOCATION OF STEEL DIAPHRAGMS

Note: Longitudinal diminsions are horizontal.

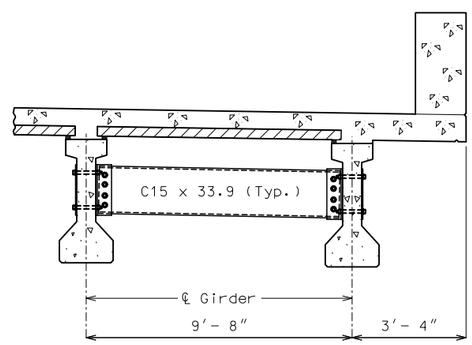

PART SECTION SHOWING INTERMEDIATE DIAPHRAGMS

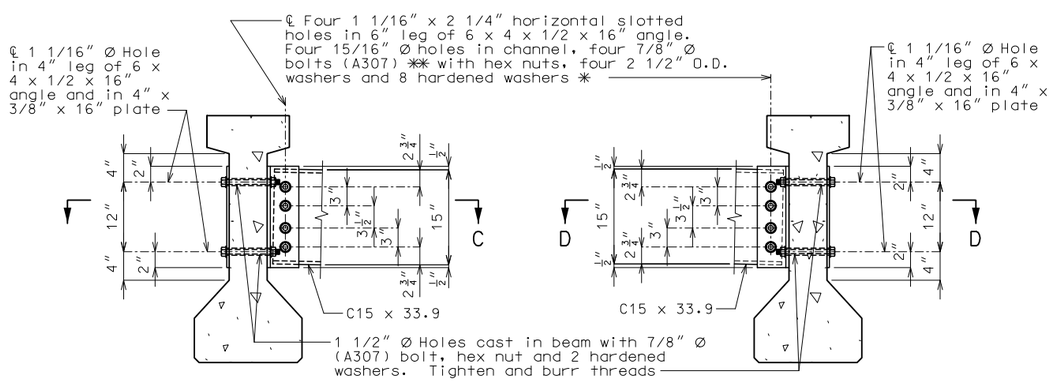

SECTION THRU INT. GIRDER AT DIAPHRAGM

SECTION THRU EXT. GIRDER AT DIAPHRAGM

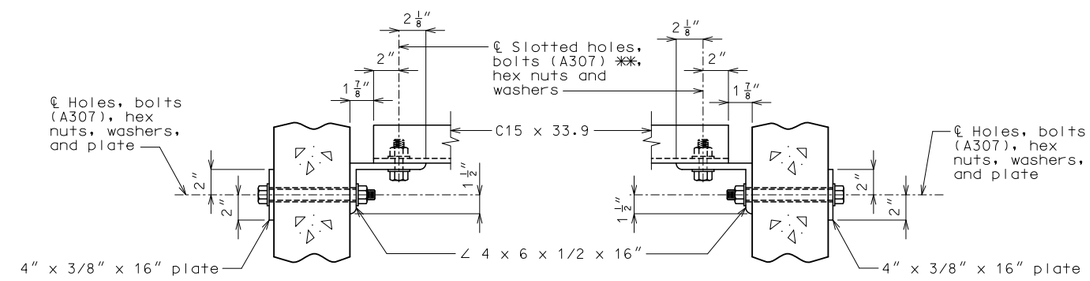

SECTION C-C

SECTION D-D

STEEL DIAPHRAGM NOTES:

✱ In lieu of 2 1/2" outside diameter washers, contractor may substitute a 3/16" (Min. thickness) plate with four 15/16" Ø holes and one hardened washer per bolt.

✱✱ Bolts shall be tightened to provide a tension of one-half that specified in Sec 712 for high strength bolt installation. A325 bolts may be substituted for and installed in accordance with the requirements for the specified A307 bolts.

All diaphragm materials including bolts, nuts, and washers shall be galvanized.

Fabricated structural steel shall be ASTM A709 Grade 36 except as noted.

Payment for furnishing and installing steel intermediate diaphragms will be considered completely covered by the contract unit price for Steel Intermediate Diaphragm for P/S Concrete Girders.

Shop drawings will not be required for steel intermediate diaphragms and angle connections.

For location of intermediate diaphragms, see this Sheet.

STEEL INTERMEDIATE DIAPHRAGM DETAILS

Detailed JUL 2016
Checked JUL 2016

Note: This drawing is not to scale. Follow dimensions.

Y:\16019 TWM Stoddard County Bridge\DGN\Bridge\Final\Plotsheets\B_A8474_009_J9S3145_Intermediate Diaphragms.dgn 7:49:24 AM 9/19/2016

STATE OF MISSOURI
CHRIS LINNEMAN
NUMBER PE-2002016690
REGISTERED PROFESSIONAL ENGINEER
THIS SHEET HAS BEEN SIGNED, SEALED AND DATED ELECTRONICALLY.

DATE PREPARED 9/19/2016	
ROUTE H	STATE MO
DISTRICT BR	SHEET NO. 9
COUNTY STODDARD	
JOB NO. J9S3145	
CONTRACT ID.	
PROJECT NO.	
BRIDGE NO. A8474	

DATE	DESCRIPTION

IF A SEAL IS PRESENT ON THIS SHEET IT HAS BEEN ELECTRONICALLY SEALED AND DATED

MISSOURI HIGHWAYS AND TRANSPORTATION COMMISSION
105 WEST CAPITOL
JEFFERSON CITY, MO 65102
1-888-ASK-MODOT (1-888-275-6636)

EFK•Moen, LLC
Civil Engineering Design
13523 Barrett Parkway Dr
Suite 250
St. Louis, MO 63021
Phone 314-394-3100
Missouri Certificate of Authority: 001578

REV.

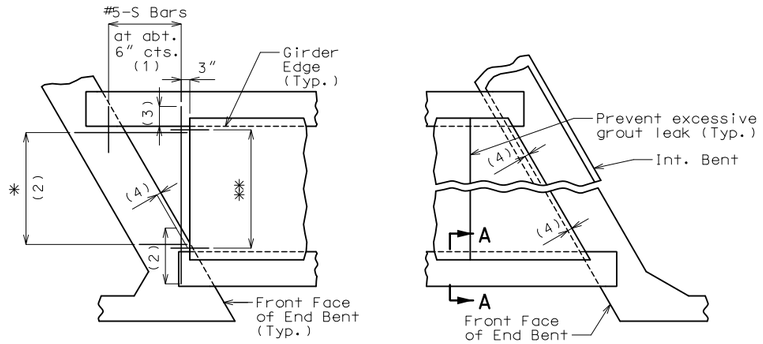

PLAN SHOWING PANELS PLACEMENT

✱ #5-S Bars at abt. 9" cts. (1)
✱✱ #3-P1 at 12" cts. (End panels only)

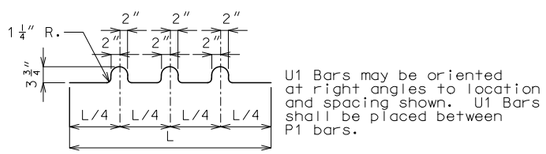

BENDING DIAGRAM FOR U1 BAR

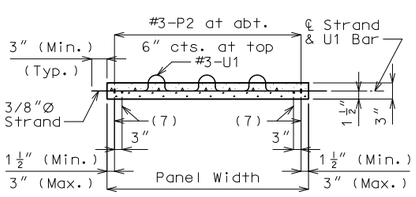

SECTION B-B

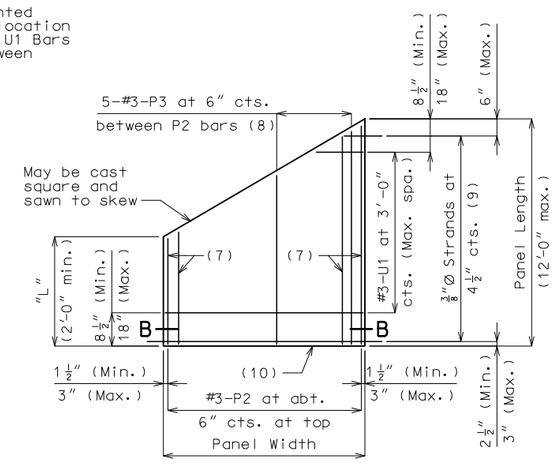

PLAN OF OPTIONAL SKEWED END PANEL

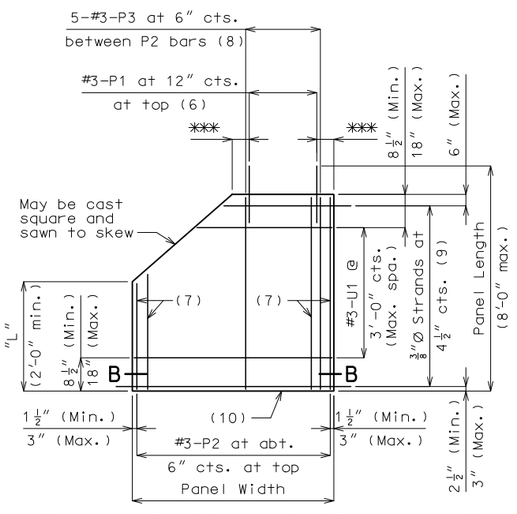

PLAN OF OPTIONAL TRUNCATED END PANEL

✱✱✱ 3" (Min.), 6" (Max.)

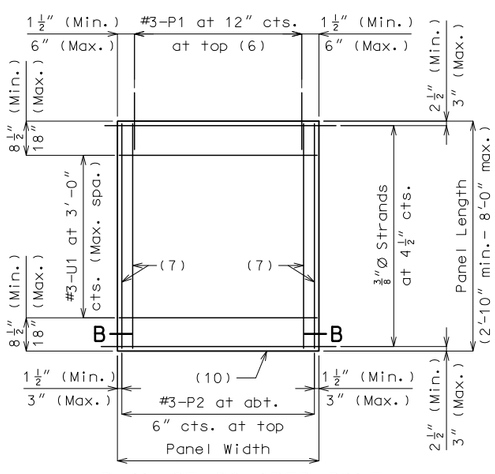

PLAN OF SQUARED PANEL

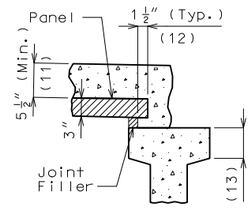

SECTION A-A

Joint Filler Dimensions		
Width	Height	
	Min.	Max.
1 1/2"	1"	2"

Reference Notes:

Plan of Panels Placement:

(1) S-bars shown are bottom steel in slab between panels and used with squared and truncated end panels only.

(2) Extend S-bars 18 inches beyond the front face of end bents and int. bents for squared and truncated end panels only.

(3) Extend S-bars 9 inches beyond edge of girder (Typ.).

(4) End panels shall be dimensioned 1/2" min. to 1 1/2" max. from the inside face of diaphragm.

(5) For truncated end panels, use a min. of #5-S bars at 6" crossings in openings, or min. 4x4-W7xW7.

Plans of Panels:

(6) For end panels only, P1 bars shall be 2'-0" in length and embedded 12". P1 bars will not be required for panels at squared integral end bents.

(7) #3-P2 bars near edge of panel at bottom (under strands).

(8) Use #3-P3 bars if panel is skewed 45° or greater.

(9) Any strand 2'-0" or shorter shall have a #4 reinforcing bar on each side of it, centered between strands. Strands 2'-0" or shorter may then be debonded at the fabricator's option.

(10) Optional 1/2" x 45° Chamfer one or both sides at bottom.

Section A-A:

(11) Slab thickness over prestressed panels varies due to girder camber. In order to maintain minimum slab thickness, it may be necessary to raise the grade uniformly throughout the structure. No payment will be made for additional labor or materials required for necessary grade adjustment.

(12) Contractor shall ensure proper consolidation under and between panels.

(13) At the contractor's option, the variation in slab thickness over prestressed panels may be eliminated or reduced by increasing and varying the girder top flange thickness. Dimensions shall be shown on the shop drawings.

DETAILS OF PRESTRESSED PANELS

General Notes:

Prestressed Panels:

Concrete for prestressed panels shall be Class A-1 with f'c = 6,000 psi, f'ci = 4,000 psi.

The top surface of all panels shall receive a scored finish with a depth of scoring of 1/8" perpendicular to the prestressing strands in the panels.

Prestressing tendons shall be high-tensile strength, uncoated, seven-wire, low-relaxation strands for prestressed concrete in accordance with AASHTO M 203 Grade 270, with nominal diameter of strand = 3/8" and nominal area = 0.085 sq.in. and minimum ultimate strength = 22.95 kips (270 ksi). Larger strands may be used with the same spacing and initial tension.

Initial prestressing force = 17.2 kips/strand.

The method and sequence of releasing the strands shall be shown on the shop drawings.

Suitable anchorage devices for lifting panels may be cast in panels, provided the devices are shown on the shop drawings and approved by the engineer. Panel lengths shall be determined by the contractor and shown on the shop drawings.

When squared end panels are used at skewed bents, the skewed portion shall be cast full depth. No separate payment will be made for additional concrete and reinforcing required.

Support from diaphragm forms is required under the optional skewed end until cast-in-place concrete has reached 3,000 psi compressive strength.

Prestressed panels shall be brought to saturated surface-dry (SSD) condition just prior to the deck pour. There shall be no free standing water on the panels or in the area to be cast.

The prestressed panel quantities are not included in the table of estimated quantities for the slab.

Reinforcing Steel:

All dimensions are out to out.

Hooks and bends shall be in accordance with the CRSI Manual of Standard Practice for Detailing Reinforced Concrete Structures, Stirrup and Tie Dimensions.

Minimum clearance to reinforcing steel shall be 1 1/2", unless otherwise shown.

If U1 bars interfere with placement of slab steel, U1 loops may be bent over, as necessary, to clear slab steel.

Deformed welded wire reinforcement (WWR) providing a minimum area of reinforcing perpendicular to strands of 0.22 sq in./ft, with spacing parallel to strands sufficient to ensure proper handling, may be used in lieu of the #3-P2 bars shown. Wire diameter shall not be larger than 0.375 inch. The above alternative reinforcement criteria may be used in lieu of the #3-P3 bars, when required, and placed over a width not less than 2 feet.

The following reinforcing steel shall be tied securely to the strands with the following maximum spacing in each direction:
#3-P2 bars at 16 inches.
WWR at 24 inches.

The #3-U1 bars shall be tied securely to #3-P2 bars, to WWR or to strands (when placed between P1 bars) at about 3-foot centers.

Minimum reinforcement steel length shall be 2'-0".

All reinforcement other than prestressing strands shall be epoxy coated.

Precast panels may be in contact with stirrup reinforcing in diaphragms.

S-bars are not listed in the bill of reinforcing.

Cost of S-bars will be considered completely covered by the contract unit price for the slab.

Joint Filler:

Joint filler shall be preformed fiber expansion joint material in accordance with Sec 1057 or expanded or extruded polystyrene bedding material in accordance with Sec 1073.

Use Slab Haunching Diagram on Sheet No. 12 for determining thickness of joint filler within the limits noted in the table of Joint Filler Dimensions.

Thicker material may be used on one or both sides of the girder to reduce cast-in-place concrete thickness to within tolerances.

The same thickness of preformed fiber expansion joint material shall be used under any one edge of any panel except at locations where top flange thickness may be stepped. The maximum change in thickness between adjacent panels shall be 1/4 inch. The polystyrene bedding material may be cut with a transition to match haunch height above top of flange.

Joint filler shall be glued to the girder. When thickness exceeds 1 1/2 inches, the joint filler shall be glued top and bottom. The glue used shall be the type recommended by the joint filler manufacturer.

Edges of panels shall be uniformly seated on the joint filler before slab reinforcement is placed.

STATE OF MISSOURI
CHRIS LINNEMAN
NUMBER PE-2002016690
REGISTERED PROFESSIONAL ENGINEER
THIS SHEET HAS BEEN SIGNED, SEALED AND DATED ELECTRONICALLY.

DATE PREPARED	
9/19/2016	
ROUTE: H	STATE: MO
DISTRICT: BR	SHEET NO.: 10
COUNTY: STODDARD	
JOB NO.: J9S3145	
CONTRACT ID.	
PROJECT NO.	
BRIDGE NO.: A8474	

DATE	DESCRIPTION

IF A SEAL IS PRESENT ON THIS SHEET IT HAS BEEN ELECTRONICALLY SEALED AND DATED

MISSOURI HIGHWAYS AND TRANSPORTATION COMMISSION
105 WEST CAPITOL
JEFFERSON CITY, MO 65102
1-888-ASK-MODOT (1-888-275-6636)

EFK•Moen, LLC
Civil Engineering Design
13523 Barrett Parkway Dr
Suite 250
St. Louis, MO 63021
Phone 314-394-3100
Missouri Certificate of Authority: 001578

Detailed JUL 2016
Checked JUL 2016

Note: This drawing is not to scale. Follow dimensions.

REV.

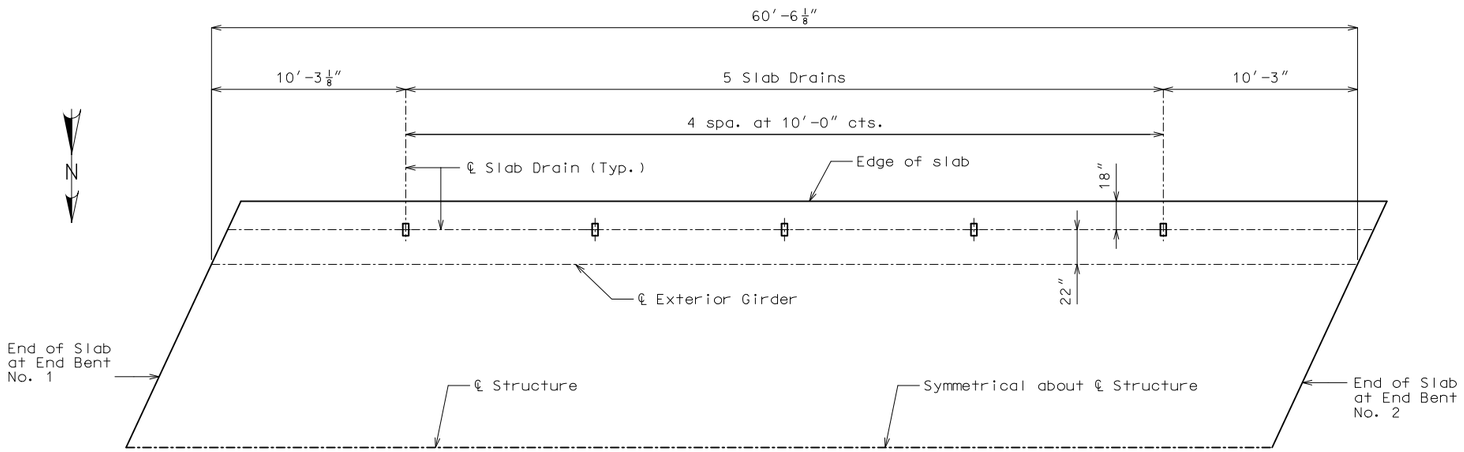

HALF PLAN OF SLAB SHOWING LOCATION OF SLAB DRAINS

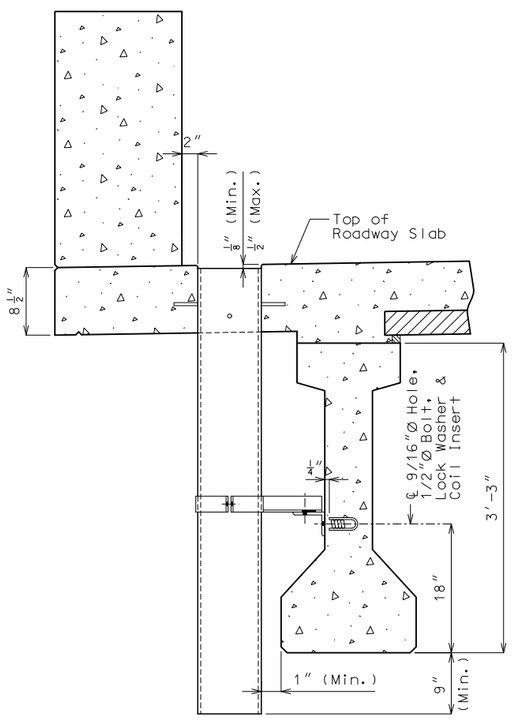

PART SECTION NEAR DRAIN

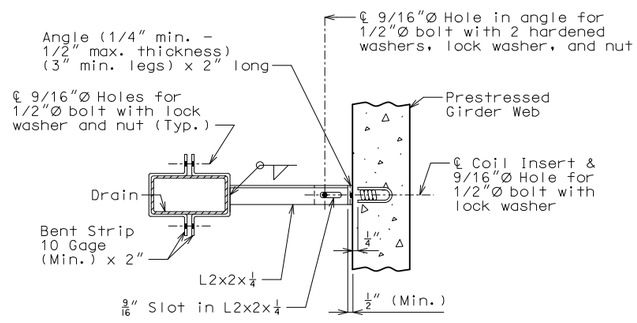

PART SECTION SHOWING BRACKET ASSEMBLY

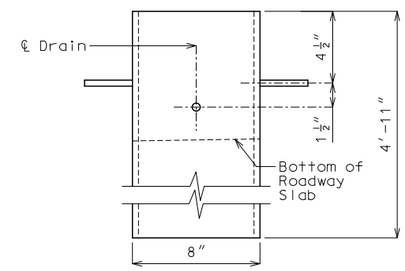

ELEVATION OF DRAIN

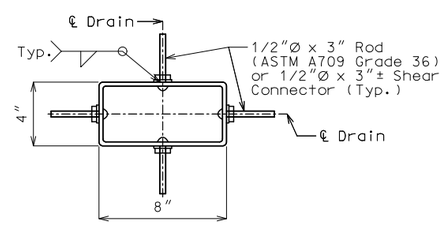

PLAN OF STEEL DRAIN

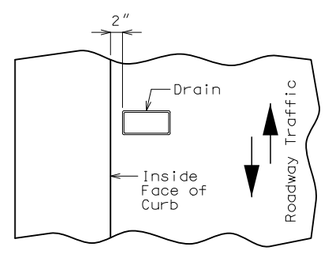

PART PLAN OF SLAB AT DRAIN

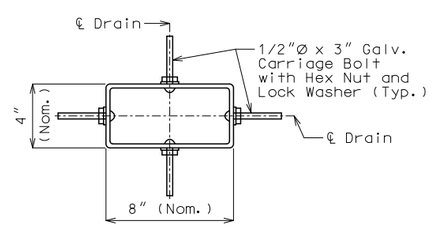

PLAN OF OPTIONAL FRP DRAIN

SLAB DRAIN DETAILS

General Notes:

Contractor shall have the option to construct either steel or FRP slab drains. All drains shall be of same type.

Slab drain bracket assembly shall be ASTM A709 Grade 36 steel.

Locate drains in slab by dimensions shown in Part Section Near Drain.

Reinforcing steel shall be shifted to clear drains.

The coil inserts and bracket assembly shall be galvinized in accordance with ASTM A123.

All bolts, hardened washers, lock washers and nuts shall be galvanized in accordance with ASTM A153.

Shop drawings will not be required for the slab drains.

The coil insert required for the bracket assembly attachment shall be located on the prestressed girder shop drawings.

Coil inserts shall have a concrete pull-out strength (ultimate load) of at least 2,500 pounds in 5,000 psi concrete.

The bolt required to attach the slab drain bracket assembly to the prestressed girder web shall be supplied by the prestressed girder fabricator.

Notes for Steel Drain:

Slab drains may be fabricated of either 1/4″ welded sheets of ASTM A709 Grade 36 steel or from 1/4″ structural steel tubing ASTM A500 or A501.

Outside dimensions of drains are 8″ x 4″.

The drains shall be galvanized in accordance with ASTM A123.

Notes for FRP Drain:

Drains shall be machine filament-wound thermosetting resin tubing meeting the requirements of ASTM D2996 with the following exceptions:

Shape of drains shall be rectangular with outside nominal dimensions of 8″ x 4″.

Minimum reinforced wall thickness shall be 1/4 inch.

The resin used shall be ultraviolet (UV) resistant and/or have UV inhibitors mixed throughout. Drains may have an exterior coating for additional UV resistance.

The color of the slab drain shall be Gray (Federal Standard #26373). The color shall be uniform throughout the resin and any coating used.

The combination of materials used in the manufacture of the drains shall be tested for UV resistance in accordance with ASTM D4329 Cycle A. The representative material shall withstand at least 500 hours of testing with only minor discoloration and without any physical deterioration. The contractor shall furnish the results of the required ultraviolet testing prior to acceptance of the slab drains.

At the contractor's option, drains may be field cut. The method of cutting FRP slab drain shall be as recommended by the manufacturer to ensure a smooth, chip free cut.

No additional payment will be made for this substitution.

STATE OF MISSOURI
CHRIS LINNEMAN
NUMBER PE-2002016690
REGISTERED PROFESSIONAL ENGINEER
THIS SHEET HAS BEEN SIGNED, SEALED AND DATED ELECTRONICALLY.

IF A SEAL IS PRESENT ON THIS SHEET IT HAS BEEN ELECTRONICALLY SEALED AND DATED

DATE PREPARED	
9/19/2016	
ROUTE: H	STATE: MO
DISTRICT: BR	SHEET NO.: 11
COUNTY: STODDARD	
JOB NO.: J9S3145	
CONTRACT ID.	
PROJECT NO.	
BRIDGE NO.: A8474	

DATE	DESCRIPTION

MISSOURI HIGHWAYS AND TRANSPORTATION COMMISSION
105 WEST CAPITOL
JEFFERSON CITY, MO 65102
1-888-ASK-MODOT (1-888-275-6636)

EFK·Moen, LLC
Civil Engineering Design
13523 Barrett Parkway Dr
Suite 250
St. Louis, MO 63021 Phone 314-394-3100
Missouri Certificate of Authority: 001578

REV.

Detailed JUL 2016
Checked JUL 2016

Note: This drawing is not to scale. Follow dimensions.

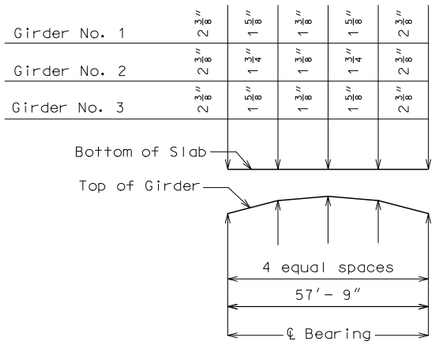

Span (1-2)

THEORETICAL SLAB HAUNCHING DIAGRAM

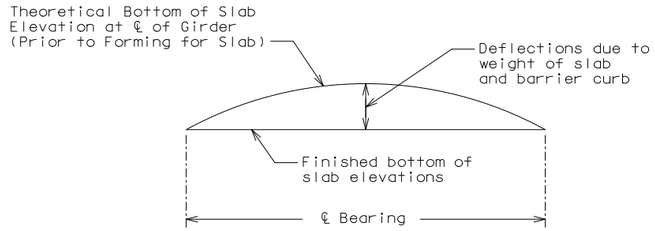

TYPICAL SLAB ELEVATIONS DIAGRAM

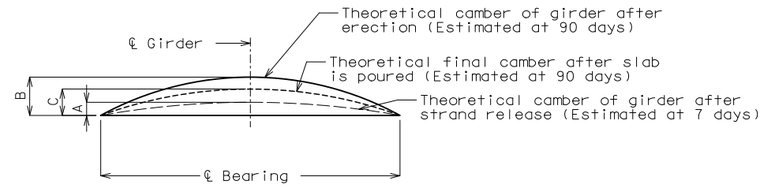

	Span (1-2)		
	A	B	C
Ext. girder	1″	1 3/4″	1 1/8″
Int. girder	1″		

GIRDER CAMBER DIAGRAM

If girder camber is different from that shown in the camber diagram, in order to maintain minimum slab thickness adjustment of the slab haunches, an increase in slab thickness or a raise in grade uniformly throughout the structure shall be necessary. no payment will be made for additional labor or materials required for variation in haunching, slab thickness or grade adjustment.

Concrete in the slab haunches is included in the Estimated Quantities for Slab on Concrete I-Girder.

Conversion factors for girder camber (estimated at 90 days)

0.25 pt. = 0.7125 x 0.5 pt.

Theoretical Bottom of Slab Elevations at ℄ of Girder (Prior to Forming for Slab) ✳✳					
	Span (1-2) (57′-9″ ℄ brg - ℄ brg.)				
	℄ brg.	.25	.50	.75	℄ brg.
Girder No. 1	331.25	331.30	331.32	331.30	331.25
Girder No. 2	331.44	331.50	331.52	331.50	331.44
Girder No. 3	331.25	331.30	331.32	331.30	331.25

✳✳ Elevations are based on a constant slab thickness of 8 1/2″ and include allowance for theoretical dead load deflections due to weight of slab (including precast panel) and barrier curb.

✳ Adjust the construction joint to a clearance of 6 inches minimum from the panel joint.

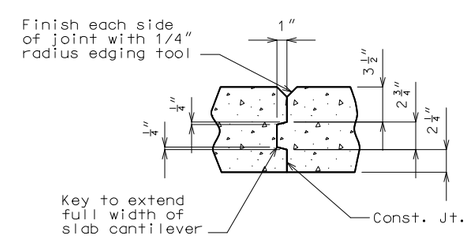

(Slab Cantilever)

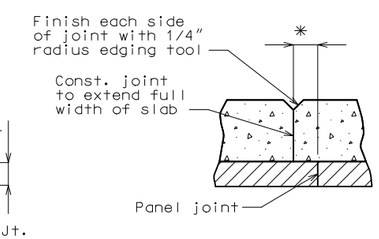

(Slab on Precast Panels)

SLAB CONSTRUCTION JOINT DETAILS

DETAILS OF SLAB

Detailed JUL 2016
Checked JUL 2016

Note: This drawing is not to scale. Follow dimensions.

STATE OF MISSOURI
CHRIS LINNEMAN
NUMBER PE-2002016690
REGISTERED PROFESSIONAL ENGINEER

THIS SHEET HAS BEEN SIGNED, SEALED AND DATED ELECTRONICALLY.

DATE PREPARED	
9/19/2016	
ROUTE H	STATE MO
DISTRICT BR	SHEET NO. 12
COUNTY STODDARD	
JOB NO. J9S3145	
CONTRACT ID.	
PROJECT NO.	
BRIDGE NO. A8474	

DATE	DESCRIPTION

IF A SEAL IS PRESENT ON THIS SHEET IT HAS BEEN ELECTRONICALLY SEALED AND DATED

MISSOURI HIGHWAYS AND TRANSPORTATION COMMISSION
105 WEST CAPITOL
JEFFERSON CITY, MO 65102
1-888-ASK-MODOT (1-888-275-6636)

EFK•Moen, LLC
Civil Engineering Design
13523 Barrett Parkway Dr
Suite 250
St. Louis, MO 63021
Phone 314-394-3100
Missouri Certificate of Authority: 001578

REV.

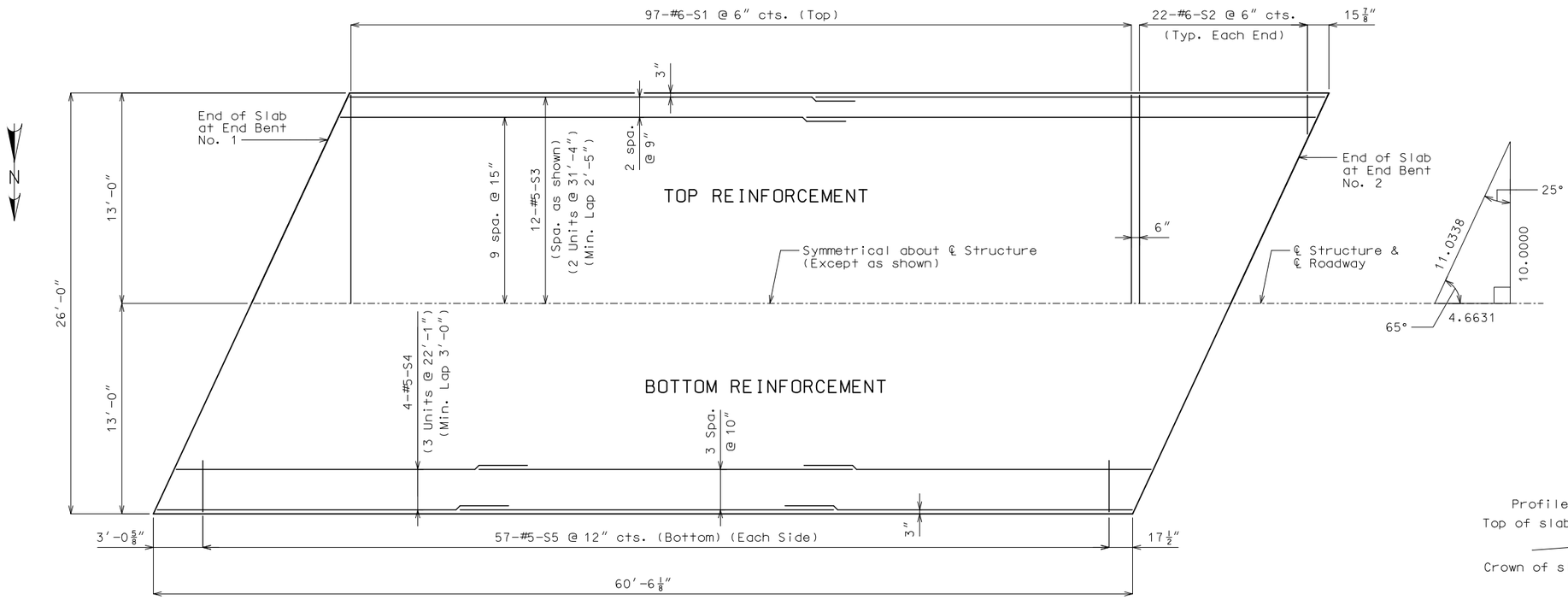

PLAN OF SLAB SHOWING REINFORCEMENT

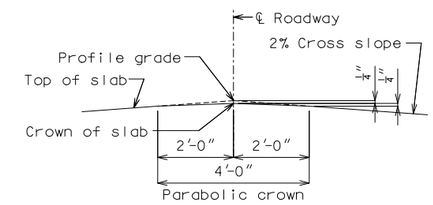

DETAIL "A"

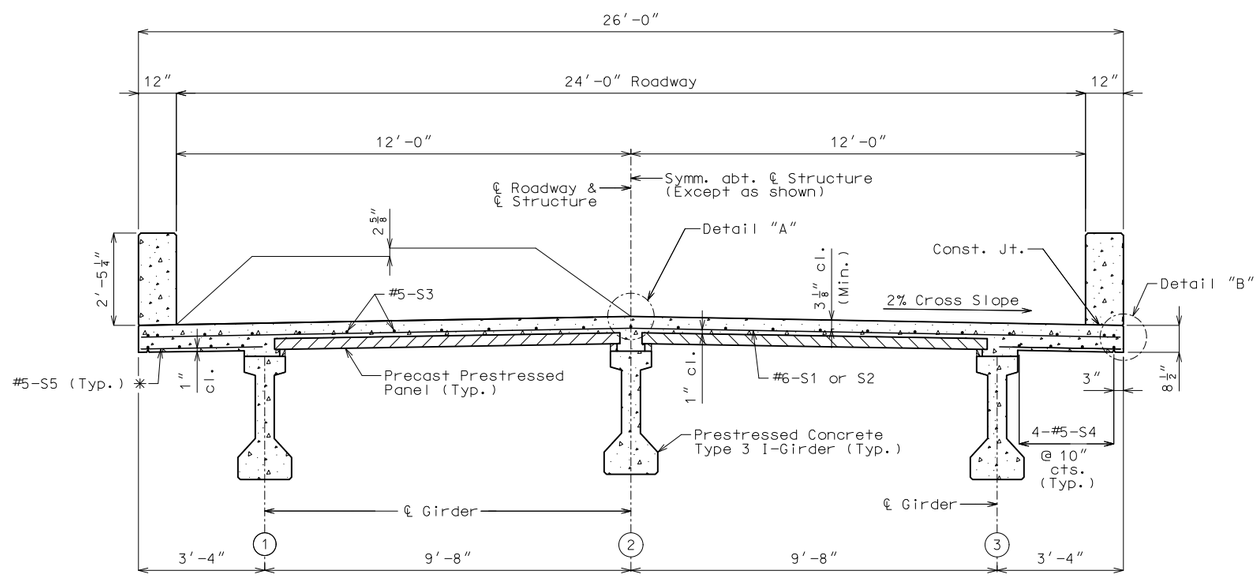

SECTION THRU SLAB

✳ Alternate Shape available, see Barrier Curb Sheet.

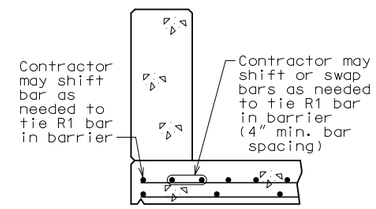

OPTIONAL SHIFTING
TOP BARS AT BARRIER

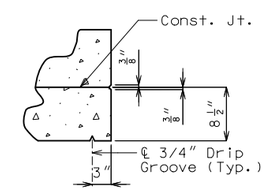

DETAIL "B"

Notes:

Longitudinal dimensions shown are horizontal.

For details and reinforcement of barrier curb not shown, see Sheets No. 14, 15 & 16.

For Theoretical Slab Haunching Diagram, Girder Camber Diagram, Theoretical Bottom of Slab Elevations and Slab Construction Joint Details, see Sheet No. 12.

For details of Precast Panels, see Sheet No. 10.

For details and locations of Slab Drains, see Sheet No. 11.

The contractor shall pour and satisfactorily finish the roadway slab at a rate of not less than 25 cubic yards per hour.

The concrete diaphragms at integral end bents shall be poured a minimum of 30 minutes and a maximum of 2 hours before the slab is poured.

DETAILS OF SLAB

Detailed JUL 2016
Checked JUL 2016

Note: This drawing is not to scale. Follow dimensions.

STATE OF MISSOURI
CHRIS LINNEMAN
NUMBER PE-2002016690
REGISTERED PROFESSIONAL ENGINEER
THIS SHEET HAS BEEN SIGNED, SEALED AND DATED ELECTRONICALLY.

DATE PREPARED	
9/19/2016	
ROUTE: H	STATE: MO
DISTRICT: BR	SHEET NO.: 13
COUNTY: STODDARD	
JOB NO.: J9S3145	
CONTRACT ID.	
PROJECT NO.	
BRIDGE NO.: A8474	

DATE	DESCRIPTION

IF A SEAL IS PRESENT ON THIS SHEET IT HAS BEEN ELECTRONICALLY SEALED AND DATED

MISSOURI HIGHWAYS AND TRANSPORTATION COMMISSION
105 WEST CAPITOL
JEFFERSON CITY, MO 65102
1-888-ASK-MODOT (1-888-275-6636)

EFK•Moen, LLC
Civil Engineering Design
13523 Barrett Parkway Dr
Suite 250
St. Louis, MO 63021
Phone 314-394-3100
Missouri Certificate of Authority: 001578

REV.

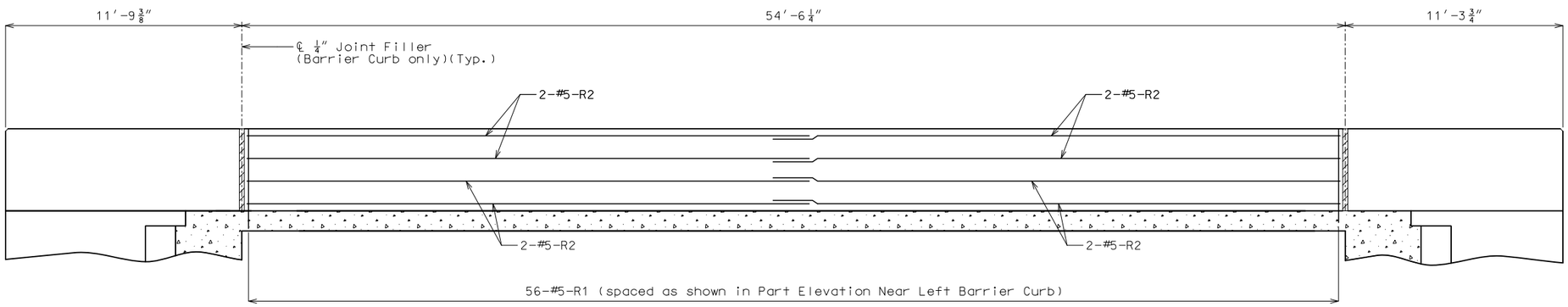

ELEVATION OF BARRIER CURB

(Left barrier curb shown, right barrier curb similar)

Longitudinal dimensions are horizontal.

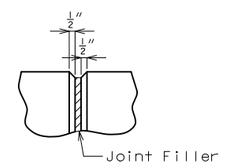

FILLED JOINT DETAIL

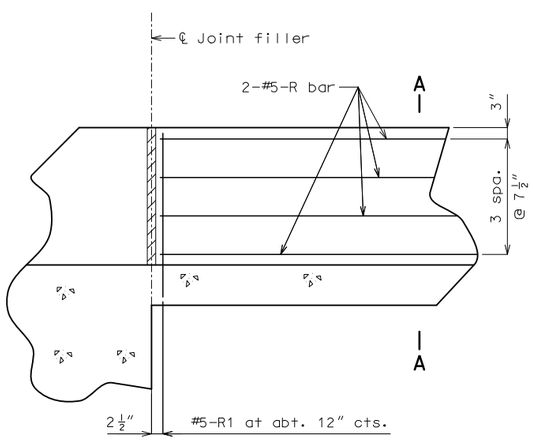

PART ELEVATION OF BARRIER CURB (CAST-IN-PLACE CONVENTIONAL FORMING)

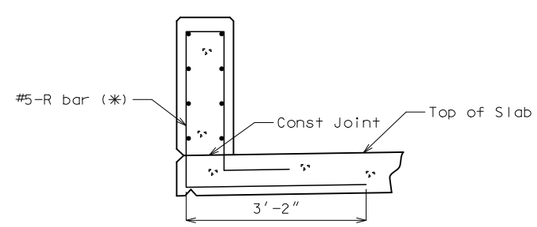

R-BAR PERMISSIBLE ALTERNATE SHAPE

✳ The R1 bar may be separated into two bars as shown, at the contractor's option, only when slip forming is not used. (All dimensions are out to out.)

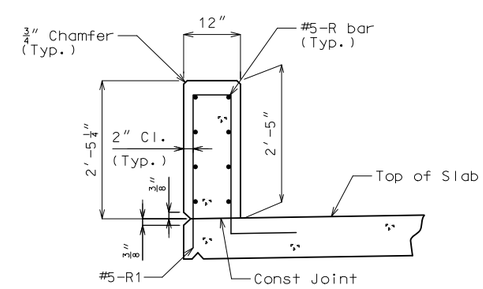

PART SECTION A-A

Use a minimum lap of 3′-1″ for #5 horizontal safety barrier curb bars.

The cross-sectional area above the slab = 2.43 sq. ft.

General Notes

Top of barrier curb shall be built parallel to grade with barrier curb joints (except at end bents) normal to grade.

All exposed edges of barrier curb shall have either a 1/2-inch radius or a 3/8-inch bevel, unless otherwise noted.

Payment for all concrete and reinforcement, complete in place, will be considered completely covered by the contract unit price for Barrier Curb per linear foot.

Concrete in the barrier curb shall be Class B-1.

Measurement of barrier curb is to the nearest linear foot for each structure, measured along the outside top of slab from end of wing to end of wing.

Concrete traffic barrier delineators shall be placed on top of the barrier curb as shown on Missouri Standard Plans 617.10 and in accordance with Sec 617. Delineators on bridges with two-lane, two-way traffic shall have retroreflective sheeting on both sides. Concrete traffic barrier delineators will be considered completely covered by the contract unit price for Barrier Curb.

DETAILS OF BARRIER CURB

Detailed JUL 2016
Checked JUL 2016

Note: This drawing is not to scale. Follow dimensions.

STATE OF MISSOURI
CHRIS LINNEMAN
NUMBER PE-2002016690
REGISTERED PROFESSIONAL ENGINEER

THIS SHEET HAS BEEN SIGNED, SEALED AND DATED ELECTRONICALLY.

DATE PREPARED	9/19/2016
ROUTE	H
STATE	MO
DISTRICT	BR
SHEET NO.	14
COUNTY	STODDARD
JOB NO.	J9S3145
CONTRACT ID.	
PROJECT NO.	
BRIDGE NO.	A8474

DATE	DESCRIPTION

IF A SEAL IS PRESENT ON THIS SHEET IT HAS BEEN ELECTRONICALLY SEALED AND DATED

MISSOURI HIGHWAYS AND TRANSPORTATION COMMISSION
105 WEST CAPITOL
JEFFERSON CITY, MO 65102
1-888-ASK-MODOT (1-888-275-6636)

EFK•Moen, LLC
Civil Engineering Design
13523 Barrett Parkway Dr
Suite 250
St. Louis, MO 63021
Phone 314-394-3100
Missouri Certificate of Authority: 001578

REV.

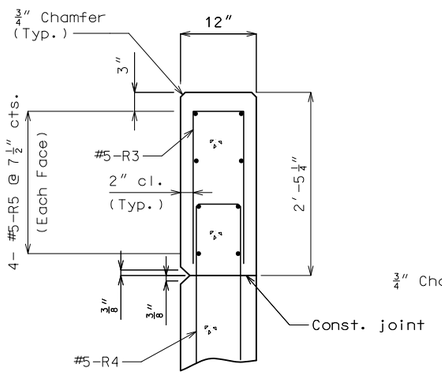

SECTION A-A

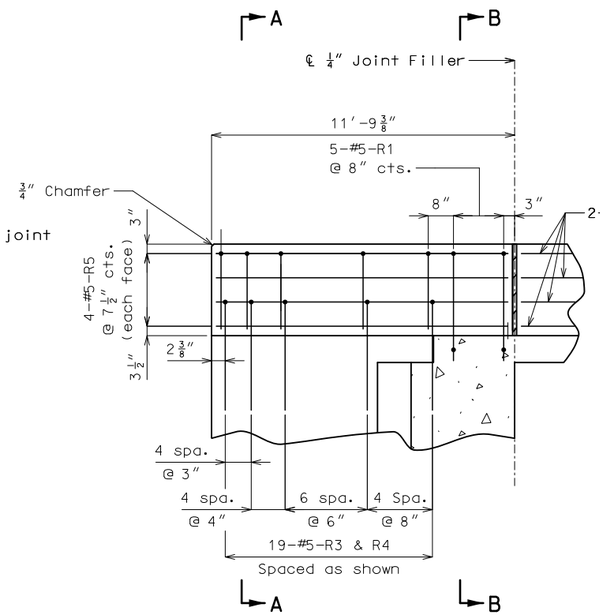

ELEVATION

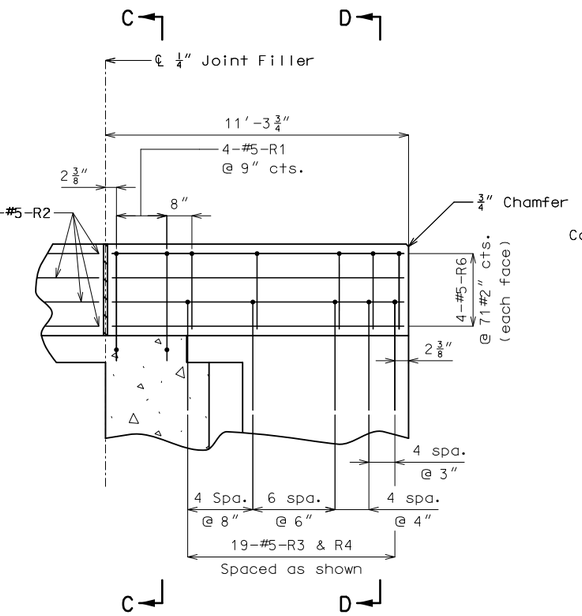

ELEVATION

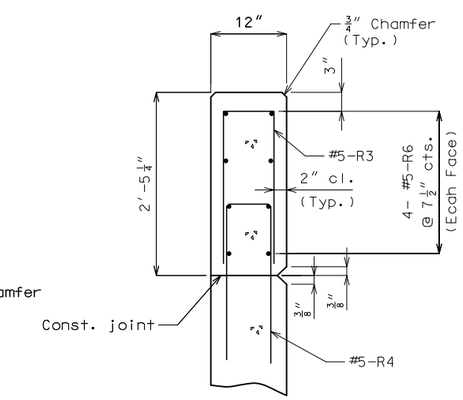

SECTION D-D

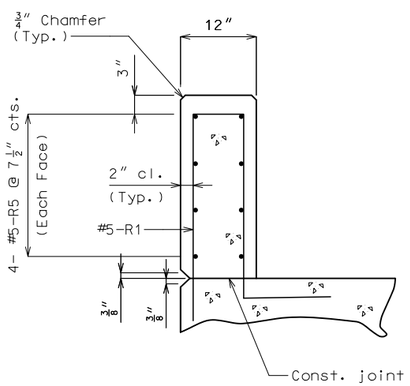

SECTION B-B

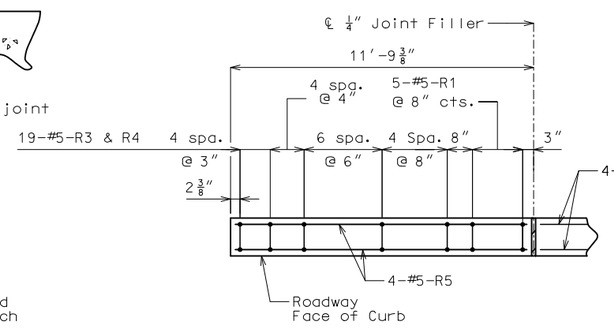

PLAN

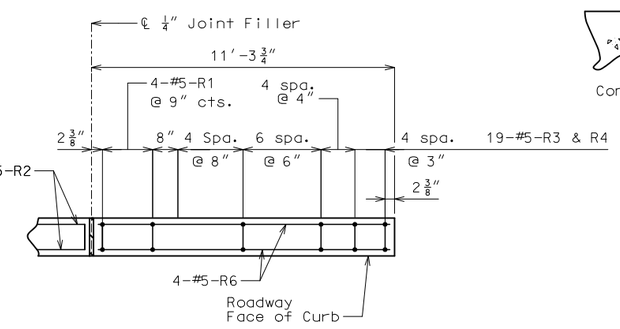

PLAN

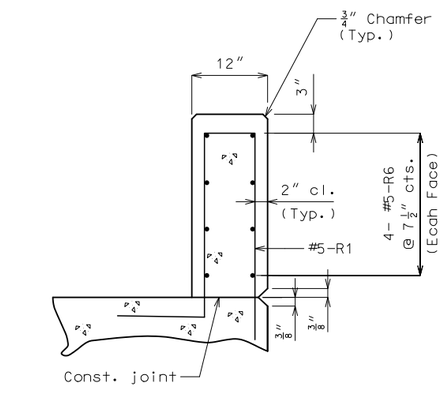

SECTION C-C

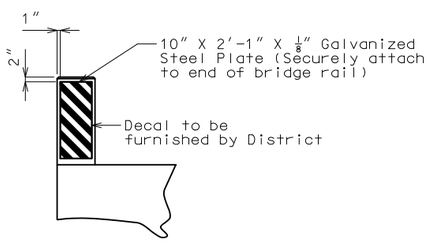

ELEVATION AT END OF BARRIER CURB

Notes: Concrete traffic barrier delineators shall be placed on top of the barrier curb as shown on Missouri Standard Plans 617.10 and in accordance with Sec 617. Delineators on bridges with two-lane, two-way traffic shall have retroreflective sheeting on both sides. Concrete traffic barrier delineators will be considered completely covered by the contract unit price for Barrier Curb.

End Plate installed in place will be considered completely covered by the contract unit price for Barrier Curb.

DETAILS OF BARRIER CURB AT END BENTS

(Left barrier curb shown, right barrier curb similar)

Detailed JUL 2016
Checked JUL 2016

Note: This drawing is not to scale. Follow dimensions.

STATE OF MISSOURI
CHRIS LINNEMAN
NUMBER PE-2002016690
REGISTERED PROFESSIONAL ENGINEER
THIS SHEET HAS BEEN SIGNED, SEALED AND DATED ELECTRONICALLY.

DATE PREPARED 9/19/2016	
ROUTE H	STATE MO
DISTRICT BR	SHEET NO. 15
COUNTY STODDARD	
JOB NO. J9S3145	
CONTRACT ID.	
PROJECT NO.	
BRIDGE NO. A8474	

DATE	DESCRIPTION

IF A SEAL IS PRESENT ON THIS SHEET IT HAS BEEN ELECTRONICALLY SEALED AND DATED

MISSOURI HIGHWAYS AND TRANSPORTATION COMMISSION
105 WEST CAPITOL
JEFFERSON CITY, MO 65102
1-888-ASK-MODOT (1-888-275-6636)

EFK•Moen, LLC
Civil Engineering Design
13523 Barrett Parkway Dr
Suite 250
St. Louis, MO 63021
Phone 314-394-3100
Missouri Certificate of Authority: 001578

REV.

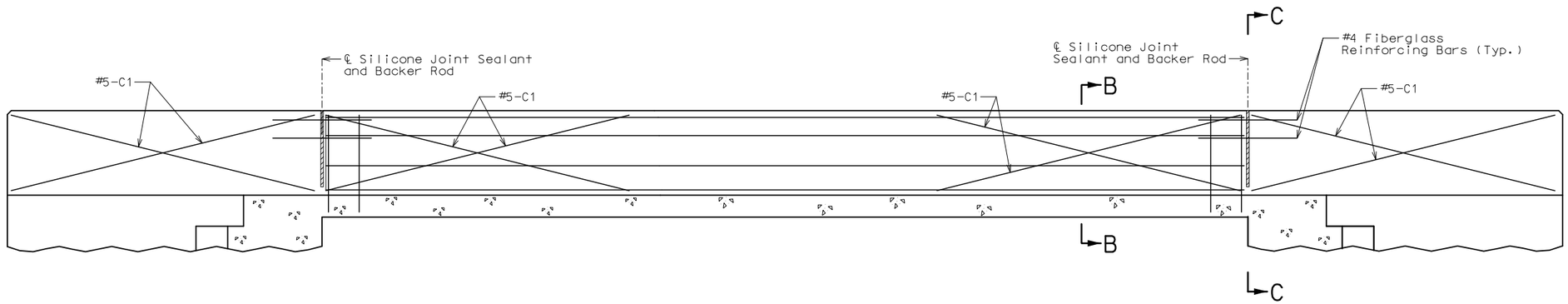

TYPICAL ELEVATION OF BARRIER CURB AT SUPPORT LOCATIONS
(OPTIONAL SLIP-FORM BRIDGE BARRIER CURB)

Notes:

Top of barrier curb shall be built parallel to grade with barrier curb joints (except at end bents) normal to grade.

Payment for all concrete and reinforcement, complete in place, will be considered completely covered by the contract unit price for Barrier Curb per linear foot.

Concrete in the barrier curb shall be Class B-1.

Measurement of barrier curb is to the nearest linear foot for each structure, measured along the outside top of slab from end of wing to end of wing

Concrete traffic barrier delineators shall be placed on top of the barrier curb as shown on Missouri Standard Plans 617.10 and in accordance with Sec 617. Delineators on bridges with two-lane, two-way traffic shall have retroreflective sheeting on both sides. Concrete traffic barrier delineators will be considered completely covered by the contract unit price for Barrier Curb.

Joint sealant and backer rods shall be used on all slip-form barrier curbs instead of joint filler and shall be in accordance with Sec 717 for silicone joint sealant for saw cut and formed joints.

For slip-form option, all sides of the barrier curb shall have a vertically broomed finish and the curb top shall have a transversely broomed finish.

C bars (slip-form option only) shall be used in addition to cast-in-place conventional forming reinforcement for bridge barrier curb.

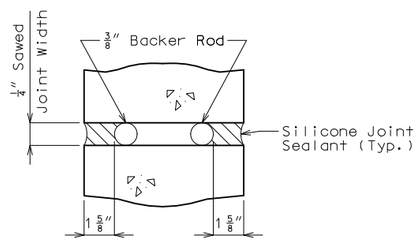

SECTION A-A

Notes:

Cost of silicone joint sealant and backer rod, complete in place, will be considered completely covered by the contract unit price for Barrier Curb.

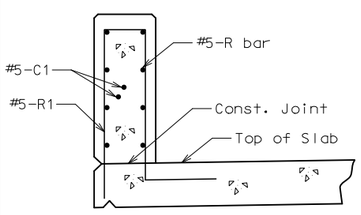

SECTION B-B

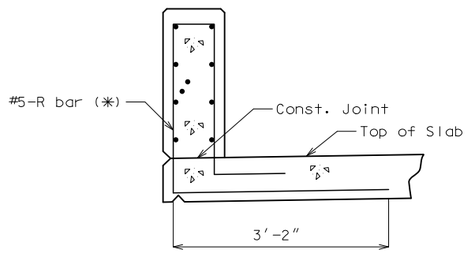

SECTION B-B
(Optional #5-R bar shown)

R-Bar Permissible Alternative Shape

Note:

(✳) The R1 bar and #5 bottom transverse slab bar in cantilever (P/S panels only) combination may be furnished as one bar at the contractor's oprtion.

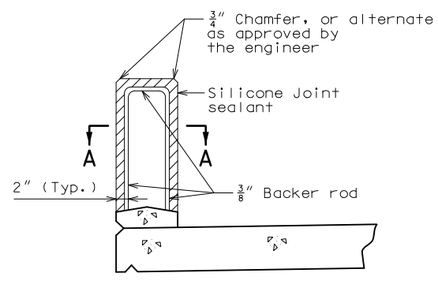

SECTION THRU JOINT

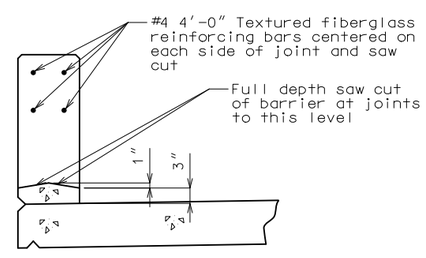

PART SECTION C-C

OPTIONAL SLIP-FORM BARRIER CURB

Detailed JUL 2016
Checked JUL 2016

Note: This drawing is not to scale. Follow dimensions.

Sheet No. 16 of 21

Y:\16019 TWM Stoddard County Bridge\DGN\Bridge\Final\Plotsheets\B_A8474_016_J9S3145_Slip Form Barrier Curb.dgn 7:49:35 AM 9/19/2016

STATE OF MISSOURI
CHRIS LINNEMAN
NUMBER PE-2002016690
REGISTERED PROFESSIONAL ENGINEER
THIS SHEET HAS BEEN SIGNED, SEALED AND DATED ELECTRONICALLY.

DATE PREPARED	9/19/2016
ROUTE	H
STATE	MO
DISTRICT	BR
SHEET NO.	16
COUNTY	STODDARD
JOB NO.	J9S3145
CONTRACT ID.	
PROJECT NO.	
BRIDGE NO.	A8474

DATE	DESCRIPTION

IF A SEAL IS PRESENT ON THIS SHEET IT HAS BEEN ELECTRONICALLY SEALED AND DATED

MISSOURI HIGHWAYS AND TRANSPORTATION COMMISSION
105 WEST CAPITOL
JEFFERSON CITY, MO 65102
1-888-ASK-MODOT (1-888-275-6636)

EFK•Moen, LLC
Civil Engineering Design
13523 Barrett Parkway Dr
Suite 250
St. Louis, MO 63021
Phone 314-394-3100
Missouri Certificate of Authority: 001578

REV.

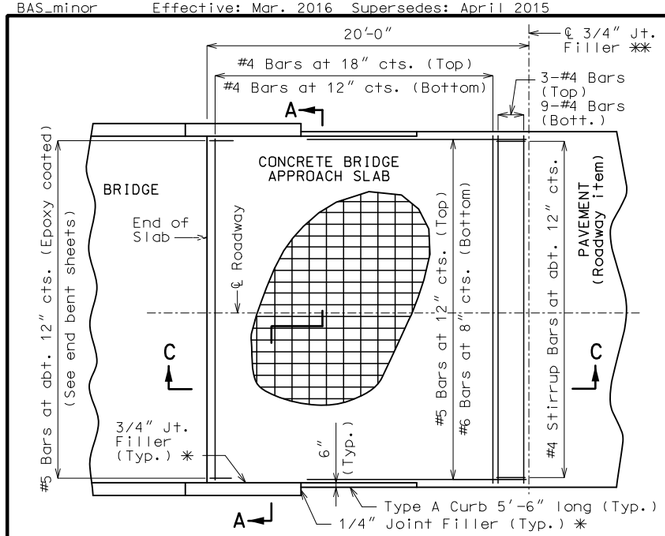

PART PLAN OF SQUARED STRUCTURE

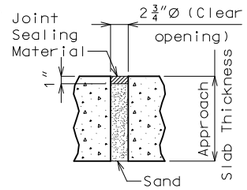

TYPICAL UNDERSEAL ACCESS HOLE DETAIL

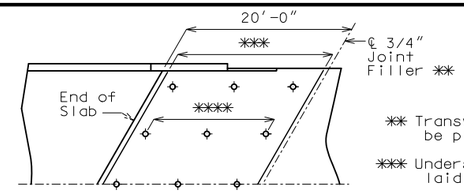

LEFT ADVANCED STRUCTURE SHOWN, RIGHT ADVANCED SIMILAR

PART PLAN OF SKEWED STRUCTURE

✱✱ Transverse reinforcing bars shall be placed parallel to end bents.

✱✱✱ Underseal access holes shall be laid out parallel to end bents.

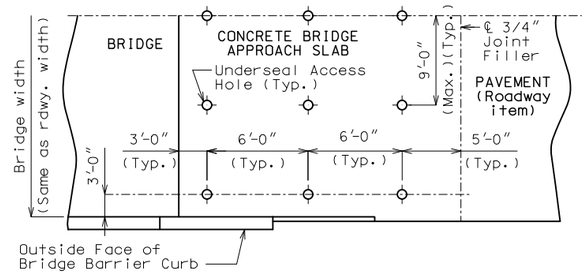

PART PLAN SHOWING UNDERSEAL ACCESS HOLES

(Squared structure shown)

General Notes:

The contractor shall pour and satisfactorily finish the bridge slab before placing the bridge approach slab.

Drain pipe may be either 6" diameter corrugated metallic-coated pipe underdrain, 4" diameter corrugated polyvinyl chloride (PVC) drain pipe, or 4" diameter corrugated polyethylene (PE) drain pipe.

MoDOT Construction personnel will indicate the bridge approach slab used for this structure:

☐ Concrete Bridge Approach Slab
☐ Asphalt Bridge Approach Slab

Notes For Concrete Slab Only:

All concrete for the bridge approach slab shall be in accordance with Sec 503 (f'c = 4,000 psi).

The reinforcing steel in the bridge approach slab shall be epoxy coated Grade 60 with fy = 60,000 psi.

Longitudinal construction joints in bridge approach slab shall be aligned with longitudinal construction joints in bridge slab.

Minimum clearance to reinforcing steel shall be 1 1/2", unless otherwise shown.

The reinforcing steel in the bridge approach slab shall be continuous. The transverse reinforcing steel may be made continuous by lap splicing the #4 bars 23".

Mechanical bar splices shall be in accordance with Sec 710.

All joint filler shall be in accordance with Sec 1057 for preformed fiber expansion joint filler except as noted.

Payment for furnishing all materials, labor and excavation necessary to construct the concrete bridge approach slab, including the timber header, underdrain, Type 5 aggregate base, joint filler, and all other appurtenances and incidental work as shown on this sheet, complete in place, will be considered completely covered by the contract unit price for Bridge Approach Slab (Minor Road) per square yard.

See Missouri Standard Plans Drawing 609.00 for details of Type A Curb.

✱ Seal joint between vertical face of bridge approach slab and wing with "Silicone Joint Sealant for Saw Cut and Formed Joints" in accordance with Sec 717.

Notes For Asphalt Slab Only:

Payment for furnishing all materials, curb, labor and excavation necessary to construct the asphalt bridge approach slab, including curb, underdrain and Type 5 aggregate base within the pay limits shown, complete in place, will be considered completely covered by the contract unit price for Bridge Approach Slab (Minor Road) per square yard.

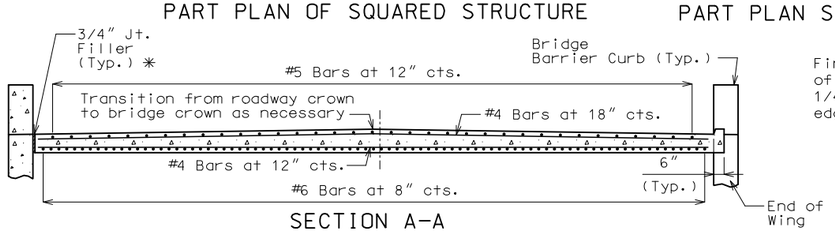

SECTION A-A

With the approval of the engineer, the contractor may crown the bottom of the approach slab to match the crown of the roadway surface.

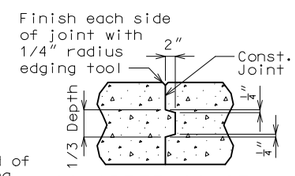

CONCRETE CONST. JOINT DETAIL

(If required)

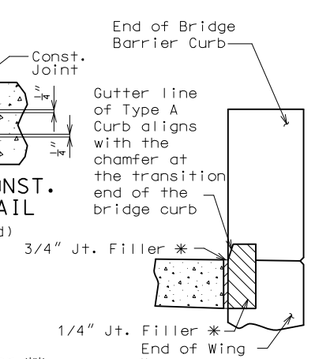

4" TYPE A CURB

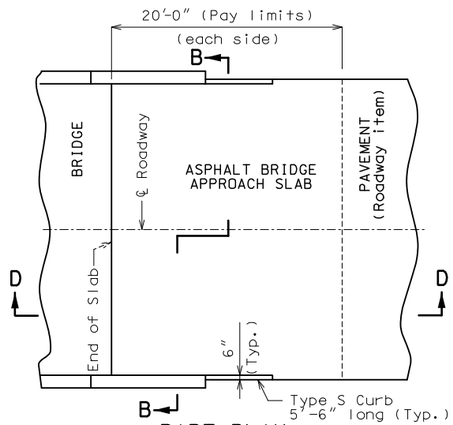

PART PLAN

(Squared structure shown, skewed structure similar)

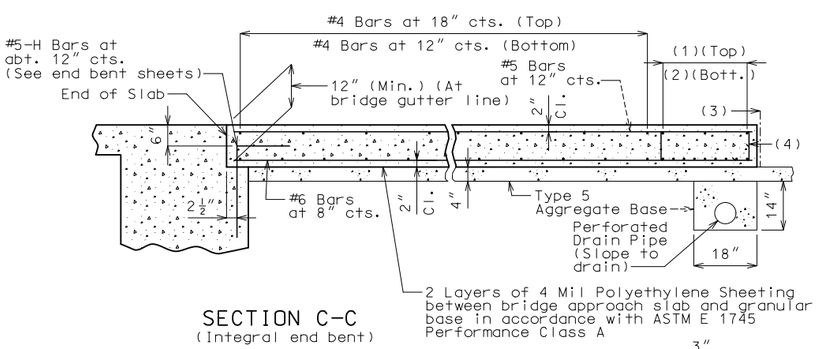

SECTION C-C

(Integral end bent)

(1) 3-#4 Bars

(2) 9-#4 Bars

(3) ℄ 3/4" Jt. Filler ✱✱

(4) #4 Stirrup Bars at abt. 12" cts.; 2'-0"x 8" (Min.) out to out; Actual length = 5'-10" (Min.); 90° stirrup hook at bottom; Stirrup height (8") and actual length vary due to crown.

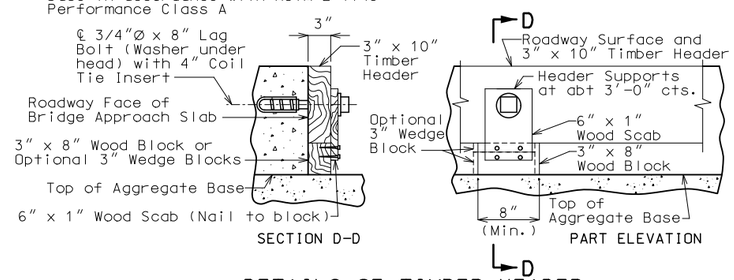

DETAILS OF TIMBER HEADER

Remove timber header when concrete pavement is placed.

OPTIONAL CONCRETE SLAB

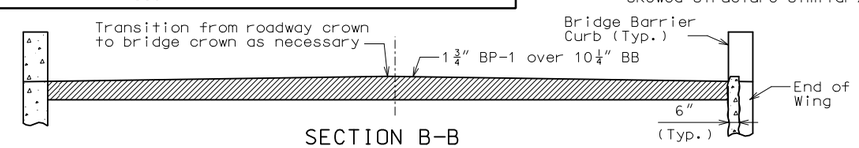

SECTION B-B

With the approval of the engineer, the contractor may crown the bottom of the approach slab to match the crown of the roadway surface.

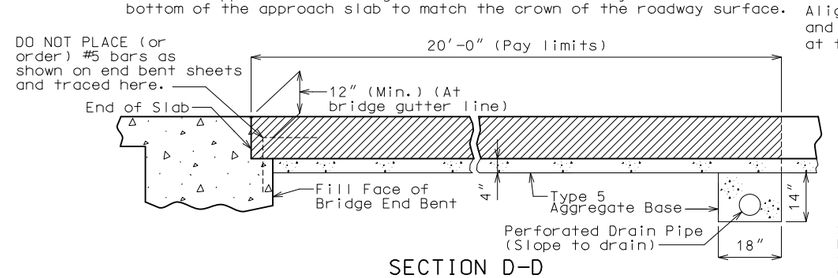

SECTION D-D

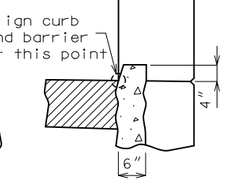

4" TYPE S CURB

See Missouri Standard Plans Drawing 609.00 for details of Type S Curb.

OPTIONAL ASPHALT SLAB (EXCEPT NOT ALLOWED WITH CONCRETE PAVEMENT)

DETAILS OF BRIDGE APPROACH SLAB (MINOR ROAD)

Detailed JUL 2016
Checked JUL 2016

Note: This drawing is not to scale. Follow dimensions.

Sheet No. 17 of 21

STATE OF MISSOURI — CHRIS LINNEMAN NUMBER PE-2002016699 — REGISTERED PROFESSIONAL ENGINEER — THIS SHEET HAS BEEN SIGNED, SEALED AND DATED ELECTRONICALLY.

DATE PREPARED	
9/19/2016	
ROUTE H	STATE MO
DISTRICT BR	SHEET NO. 17
COUNTY STODDARD	
JOB NO. J9S3145	
CONTRACT ID.	
PROJECT NO.	
BRIDGE NO. A8474	

DATE	DESCRIPTION

IF A SEAL IS PRESENT ON THIS SHEET IT HAS BEEN ELECTRONICALLY SEALED AND DATED

MISSOURI HIGHWAYS AND TRANSPORTATION COMMISSION
105 WEST CAPITOL
JEFFERSON CITY, MO 65102
1-888-ASK-MODOT (1-888-275-6636)

EFK•Moen, LLC
Civil Engineering Design
13523 Barrett Parkway Dr
Suite 250
St. Louis, MO 63021
Phone 314-394-3100
Missouri Certificate of Authority: 001578

REV.

BILL OF REINFORCING STEEL

NO. REQ'D.	MARK NO. (SIZE MARK)	LOCATION	EPOXY (E)	SHAPE NO.	STIRRUP (S)	SUBSTR. (X)	VARIES (V)	NO. EACH	B FT. IN.	C FT. IN.	D FT. IN.	E FT. IN.	F FT. IN.	H FT. IN.	K FT. IN.	NOMINAL LENGTH FT. IN.	ACTUAL LENGTH FT. IN.	WEIGHT LBS.
		END BENTS 1 & 2																
18	6 F1	WING BRACE		23					0 14.000	3 2.875	0 14.000	0 11.875	0 7.500	0 11.875	0 7.500	5 7	5 5	146
8	6 F2	DIAPHRAGM		14						4 9.000	2 10.000			2 6.750	1 2.375	7 7	7 4	88
18	6 F3	WING BRACE		23					0 14.000	5 1.000	0 14.000	0 7.500	0 11.875	0 7.500	0 11.875	7 5	7 3	196
8	6 F4	DIAPHRAGM		32						5 8.000	2 10.000			2 6.750	1 2.375	8 6	8 1	97
16	6 H1	BEAM		20					28 5.000							28 5	28 5	683
8	6 H2	BEAM		20					28 5.000							28 5	28 5	341
8	6 H3	DIAPHRAGM	E	20					28 5.000							28 5	28 5	341
48	5 H4	DIAPHRAGM	E	19					2 0.000	0 15.000						3 3	3 1	154
8	6 H5	DIAPHRAGM		20					28 5.000							28 5	28 5	341
12	6 H6	DIAPHRAGM		20					9 2.000							9 2	9 2	165
4	6 H7	DIAPHRAGM		20					8 10.000							8 10	8 10	53
12	6 H8	DIAPHRAGM		20					2 9.000							2 9	2 9	50
4	6 H9	DIAPHRAGM		20					2 6.000							2 6	2 6	15
6	5 H10	STRAND TIE		20					3 11.000							3 11	3 11	25
4	8 H11	WINGWALL	E	20					10 4.000							10 4	10 4	110
12	8 H12	WINGWALL		20					10 4.000							10 4	10 4	331
40	6 H13	WINGWALL		20					9 6.000							9 6	9 6	571
4	8 H14	WINGWALL	E	20					10 9.000							10 9	10 9	115
12	8 H15	WINGWALL		20					10 9.000							10 9	10 9	344
40	6 H16	WINGWALL		20					9 9.000							9 9	9 9	586
80	4 P1	PILE		34	S				0 10.000							3 5	3 5	183
36	5 U1	BEAM		10	S					5 2.000	3 0.000					13 4	13 1	491
20	4 U2	BEAM		13	S				3 0.000	2 8.000	3 0.000	2 8.000				12 3	11 11	159
6	4 U3	BEAM		10	S					2 8.000	3 0.000					8 4	8 1	32
52	5 U4	DIAPHRAGM	E	10	S					3 6.000	2 5.000					10 3	9 11	538
52	6 U5	DIAPHRAGM		19	S				2 8.625	3 0.000						5 9	5 7	436
70	6 U6	DIAPHRAGM	E	19	S				3 4.000	5 0.000						8 4	8 2	859
32	5 V1	BEAM		20					5 2.000							5 2	5 2	172
18	6 V2	DIAPHRAGM		20					2 8.000							2 8	2 8	72
72	6 V3	WINGWALL		20					6 10.000							6 10	6 10	739
60	5 V4	PILE		17					4 10.000							5 5	5 5	339
		SLAB																
97	6 S1	SLAB	E	20					25 9.000							25 9	25 9	3752
44	6 S2	SLAB	E	20			V	2	24 11.000							24 11	24 11	903
		Incr = 12.875"							2 5.000							2 5	2 5	
46	5 S3	SLAB	E	20					31 4.000							31 4	31 4	1503
24	5 S4	SLAB	E	20					22 1.000							22 1	22 1	553
114	5 S5	SLAB	E	20					3 2.000							3 2	3 2	377

BILL OF REINFORCING STEEL

NO. REQ'D.	MARK NO. (SIZE MARK)	LOCATION	EPOXY (E)	SHAPE NO.	STIRRUP (S)	SUBSTR. (X)	VARIES (V)	NO. EACH	B FT. IN.	C FT. IN.	D FT. IN.	E FT. IN.	F FT. IN.	H FT. IN.	K FT. IN.	NOMINAL LENGTH FT. IN.	ACTUAL LENGTH FT. IN.	WEIGHT LBS.
		BARRIER CURB																
130	5 R1	BARRIER CURB	E	28	S				2 8.500	0 8.000	2 5.750	12.000				6 10	6 7	893
32	5 R2	BARRIER CURB	E	20					28 9.000							28 9	28 9	960
76	5 R3	BARRIER CURB	E	10	S					2 2.000	0 8.000					4 10	4 8	370
76	5 R4	BARRIER CURB	E	10	S					2 8.000	0 8.000					6 0	5 10	462
16	5 R5	BARRIER CURB	E	20					11 6.000							11 6	11 6	192
16	5 R6	BARRIER CURB	E	20					11 0.000							11 0	11 0	184
		SLIP FORM																
16	5 C1	SLIP FORM	E	20					11 1.000							11 1	11 1	185
		TOTALS																
	4																	374
	5																	1027
	5		E															6371
	6																	4579
	6		E															5855
	8																	675
	8		E															225
		TOTAL																6655
		TOTAL	E															12451
		SLAB ON																
		GIRDER																
	4																	374
	5																	1027
	5		E															3125
	6																	4579
	6		E															5855
	8																	675
	8		E															225
		TOTAL																6655
		TOTAL	E															9205
		BARRIER																
	5		E															3061
		TOTAL	E															3061
		SLIP FORM																
		BARRIER																
	5		E															185
		TOTAL	E															185

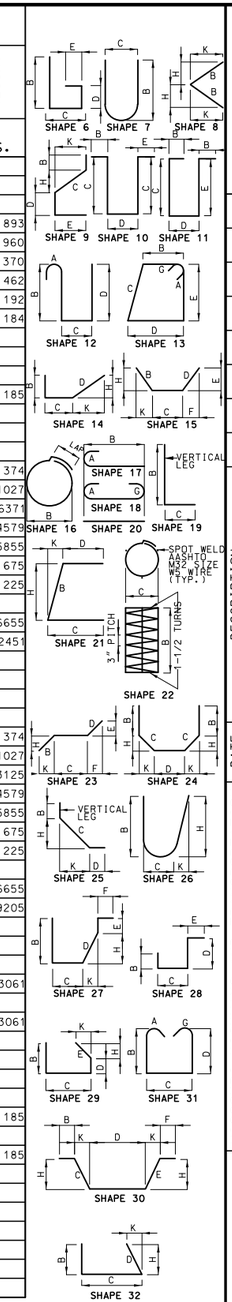

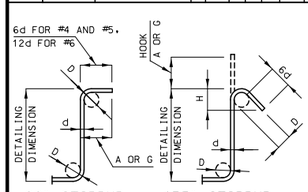

STIRRUP HOOK DIMENSIONS				
GRADES 40 - 50 - 60 KSI				
BAR SIZE	D (IN.)	90° HOOK: HOOK A OR G	135° HOOK: HOOK A OR G	135° HOOK: APPROX. H
#4	2"	4-1/2"	4-1/2"	3"
#5	2-1/2"	6"	5-1/2"	3-3/4"
#6	4-1/2"	12"	8"	4-1/2"

NOTE: UNLESS OTHERWISE NOTED DIAMETER "D" IS THE SAME FOR ALL BENDS AND HOOKS ON A BAR.

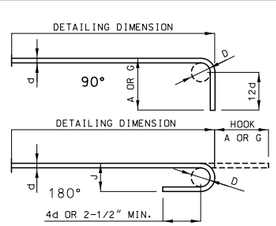

END HOOK DIMENSIONS				
BAR SIZE	D (IN.)	ALL GRADES: 180° HOOKS A OR G	ALL GRADES: 180° HOOKS J	ALL GRADES: 90° HOOKS A OR G
#3	2-1/4"	5"	3"	6"
#4	3"	6"	4"	8"
#5	3-3/4"	7"	5"	10"
#6	4-1/2"	8"	6"	12"
#7	5-1/4"	10"	7"	14"
#8	6"	11"	8"	16"
#9	9-1/2"	15"	11-3/4"	19"
#10	10-3/4"	17"	13-1/4"	22"
#11	12"	19"	14-3/4"	2'-0"
#14	18-1/4"	2'-3"	21-3/4"	2'-7"

NOTE:
ALL STANDARD HOOKS AND BENDS OTHER THAN 180 DEG. TO BE BENT WITH THE SAME PROCEDURE AS FOR 90 DEG. STD. HOOKS.
HOOKS AND BENDS SHALL BE IN ACCORDANCE WITH THE PROCEDURES AS SHOWN ON THIS SHEET.
E = EPOXY COATED REINFORCEMENT.
S = STIRRUP.
X = BAR IS INCLUDED IN SUBSTRUCTURE QUANTITIES.
V = BAR DIMENSIONS VARY IN EQUAL INCREMENTS BETWEEN DIMENSIONS SHOWN ON THIS LINE AND THE FOLLOWING LINE.
NO. EA. = NUMBER OF BARS OF EACH LENGTH.
NOMINAL LENGTHS ARE BASED ON OUT TO OUT DIMENSIONS SHOWN IN BENDING DIAGRAMS AND ARE LISTED FOR FABRICATOR'S USE (NEAREST INCH).
ACTUAL LENGTHS ARE MEASURED ALONG CENTERLINE BAR TO THE NEAREST INCH.
PAYWEIGHTS ARE BASED ON ACTUAL LENGTHS.
FOUR ANGLE OR CHANNEL SPACERS ARE REQUIRED FOR EACH COLUMN SPIRAL. SPACERS ARE TO BE PLACED ON INSIDE OF SPIRALS. LENGTH AND WEIGHT OF COLUMN SPIRALS DO NOT INCLUDE SPLICES OR SPACERS.
REINFORCING STEEL (GRADE 60) FY = 60,000 PSI.

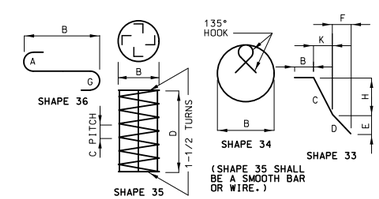

BENDING DIAGRAMS

STATE OF MISSOURI
CHRIS LINNEMAN
NUMBER PE-2002016690
REGISTERED PROFESSIONAL ENGINEER
THIS SHEET HAS BEEN SIGNED, SEALED AND DATED ELECTRONICALLY.

DATE PREPARED: 9/19/2016
ROUTE: H | STATE: MO
DISTRICT: BR | SHEET NO.: 18
COUNTY: STODDARD
JOB NO.: J9S3145
CONTRACT ID.
PROJECT NO.
BRIDGE NO.: A8474

DESCRIPTION
DATE

IF A SEAL IS PRESENT ON THIS SHEET IT HAS BEEN ELECTRONICALLY SEALED AND DATED

MISSOURI HIGHWAYS AND TRANSPORTATION COMMISSION
105 WEST CAPITOL
JEFFERSON CITY, MO 65102
1-888-ASK-MODOT (1-888-275-6636)

EFK•Moen, LLC
Civil Engineering Design
13523 Barrett Parkway Dr
Suite 250
St. Louis, MO 63021
Phone 314-394-3100
Missouri Certificate of Authority: 001578

REV.

Detailed JUL 2016
Checked JUL 2016

Note: This drawing is not to scale. Follow dimensions.

Y:\16019 TWM Stoddard County Bridge\DGN\Bridge\Final\Plotsheets\B_A8474_018_J9S3145_Bar Bill.dgn 7:49:39 AM 9/19/2016

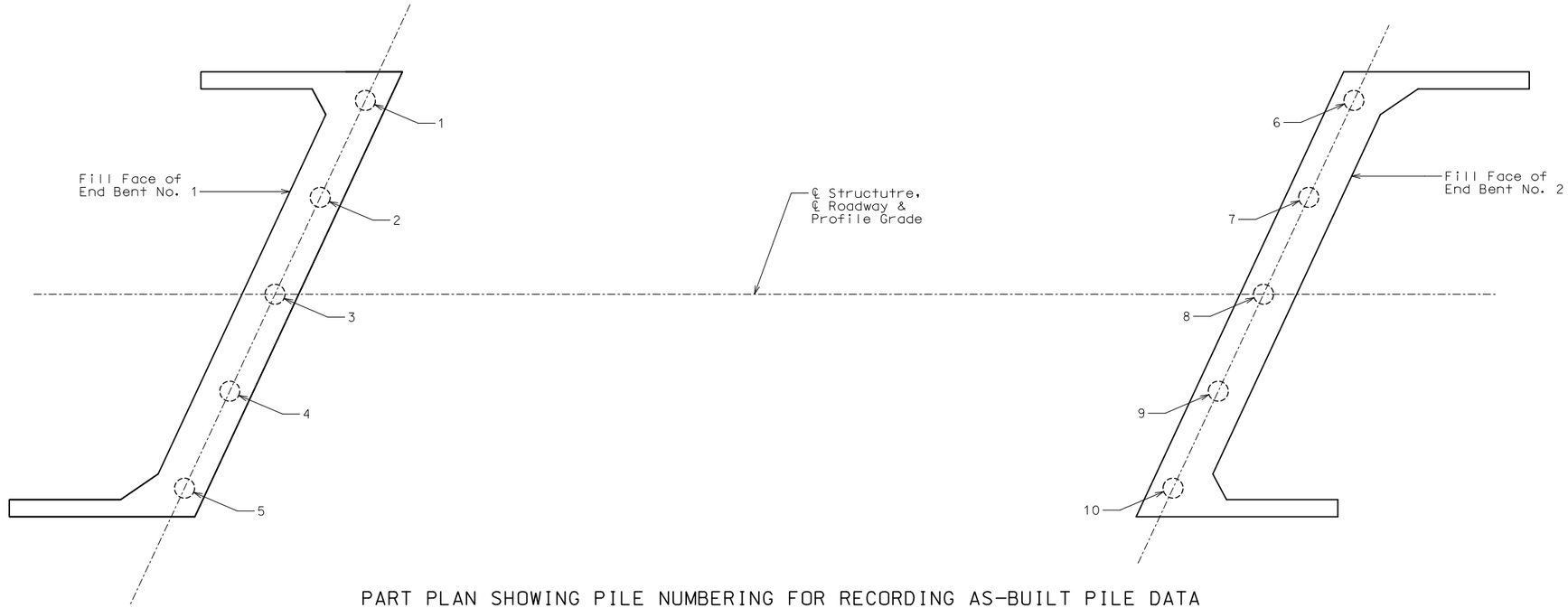

PART PLAN SHOWING PILE NUMBERING FOR RECORDING AS-BUILT PILE DATA

AS-BUILT PILE DATA

Pile No.	Length in Place (ft)	PDA Nom. Axial Compressive Resistance (kips)	PDA End of Drive Blow Count (blows/in.)	Actual End of Drive Blow Count (blows/in.)	Remarks
					END BENT NO. 1
1					
2					
3					
4					
5					
					END BENT NO. 2
6					
7					
8					
9					
10					

Note: Indicate in remarks column:
A.) Pile Type and Grade
B.) Batter
C.) Driven to Practical Refusal
D.) PDA test pile
E.) Minimum tip elevation controlled
(Use when actual blow count is less than PDA blow count due to minimum tip elevation requirment. A plus sign (+) shall be placed after the PDA nominal axial compressive resistance value indicating actual value is higher than PDA value.)

Note: This sheet should be completed by MoDOT construction personnel.

Detailed JUL 2016
Checked JUL 2016

Note: This drawing is not to scale. Follow dimensions.

STATE OF MISSOURI
CHRIS LINNEMAN
NUMBER
PE-2002016690
REGISTERED PROFESSIONAL ENGINEER
THIS SHEET HAS BEEN SIGNED, SEALED AND DATED ELECTRONICALLY.

IF A SEAL IS PRESENT ON THIS SHEET IT HAS BEEN ELECTRONICALLY SEALED AND DATED

DATE PREPARED	9/19/2016
ROUTE	H
STATE	MO
DISTRICT	BR
SHEET NO.	19
COUNTY	STODDARD
JOB NO.	J9S3145
CONTRACT ID.	
PROJECT NO.	
BRIDGE NO.	A8474

DESCRIPTION	DATE

MISSOURI HIGHWAYS AND TRANSPORTATION COMMISSION
105 WEST CAPITOL
JEFFERSON CITY, MO 65102
1-888-ASK-MODOT (1-888-275-6636)

EFK•Moen, LLC
Civil Engineering Design
13523 Barrett Parkway Dr
Suite 250
St. Louis, MO 63021
Phone 314-394-3100
Missouri Certificate of Authority: 001578

REV.

Detailed JUL 2016
Checked JUL 2016

Missouri Department of Transportation
Construction and Materials

BORING NO. H-16-16

Job No.: J9S3145	**County:** Stoddard	**Route:** H	**Logged By:** Paul Hilchen
Design: A8474	**Skew:**	**Coordinate Units:** U.S. Survey Feet	**Operator:** Mike Donahoe
Bent:	**Location:** Over County Drainage Ditch	**Coordinate Proj. Factor:**	**Date of Work:** 01/13/16
Station: 275+92.9	**Northing:** 324822	**Coordinate System:** U.S. State Plane 1983	**Depth to Water:**
Offset: 22.0L	**Easting:** 950629.1	**Coordinate Datum:** NAD 83 (CONUS)	**Time Change:**
Elevation: 327.8	**Drilling Method:**	**Coordinate Zone:** Missouri East	**Depth Hole Open:**
Drill No.: G-8929	**Hammer Efficiency:**	**Equipment:** Hogentogler CPT ,	

Depth (ft)	Graphic	Description	Elevation (ft)	Scour Parameters: Compressible	Downdrag	Scour	Total Unit Weight (pcf)	Effective Unit Weight (pcf)	Undrained Shear Strength Su or c (psf)	Pocket Pen (tsf)	Torvane (tsf)	Blow Counts (N_{60})	Internal Friction Angle ϕ'	Soil/Rock Strain ($\varepsilon_{50}/\varepsilon_{rm}$)	Lateral Subgrade Modulus K_r (pci)	Young's Modulus (ksf)	Rock Quality Designation (RQD) (%)	Unconfined Compressive Strength Qu (ksf)
0		0 - 26.7' Stiff clay without free water																
			320				111(1)	111(1)	1700(1)			9(1)		0.006	660			
10							115(1)	115(1)	1400(1)			8(1)		0.007	460			
				yes	no	yes	115(1)	115(1)	1500(1)			9(1)		0.007	500			
			310															
20							115(1)	115(1)	950(1)			5(1)		0.009	260			
							115(1)	115(1)	925(1)			7(1)		0.009	240			
		26.7 - 64.6' Sand	300															
30				no	no	yes	121(1)	121(1)				26(1)	38(1)		90			

(1) = Assumed, (2) = Actual, (3) = Phi' 0 *(Continued Next Page)*

LPILE SUMMARY - MODOT_20150812.GDT - 4/25/16 08:13 - J:\SG\GINT\PROJECT FILES\J9S3145-A8474.GPJ

Note: For locations of boring, see Sheet No. 1.

BORING DATA

Note: This drawing is not to scale. Follow dimensions.

Missouri Department of Transportation
Construction and Materials

BORING NO. H-16-16

Job No.: J9S3145	**County:** Stoddard	**Route:** H	**Logged By:** Paul Hilchen
Design: A8474	**Skew:**	**Coordinate Units:** U.S. Survey Feet	**Operator:** Mike Donahoe
Bent:	**Location:** Over County Drainage Ditch	**Coordinate Proj. Factor:**	**Date of Work:** 01/13/16
Station: 275+92.9	**Northing:** 324822	**Coordinate System:** U.S. State Plane 1983	**Depth to Water:**
Offset: 22.0L	**Easting:** 950629.1	**Coordinate Datum:** NAD 83 (CONUS)	**Time Change:**
Elevation: 327.8	**Drilling Method:**	**Coordinate Zone:** Missouri East	**Depth Hole Open:**
Drill No.: G-8929	**Hammer Efficiency:**	**Equipment:** Hogentogler CPT ,	

Depth (ft)	Graphic	Description	Elevation (ft)	Scour Parameters: Compressible	Downdrag	Scour	Total Unit Weight (pcf)	Effective Unit Weight (pcf)	Undrained Shear Strength Su or c (psf)	Pocket Pen (tsf)	Torvane (tsf)	Blow Counts (N_{60})	Internal Friction Angle ϕ'	Soil/Rock Strain ($\varepsilon_{50}/\varepsilon_{rm}$)	Lateral Subgrade Modulus K_r (pci)	Young's Modulus (ksf)	Rock Quality Designation (RQD) (%)	Unconfined Compressive Strength Qu (ksf)
		26.7 - 64.6' Sand *(continued)*					124(1)	124(1)				47(1)	41(1)		225			
			290															
40							123(1)	123(1)				39(1)	38(1)		225			
							124(1)	62(1)				44(1)	39(1)		125			
			280															
50				no	no	yes	122(1)	60(1)				31(1)	37(1)		125			
							124(1)	62(1)				40(1)	38(1)		125			
			270															
60							124(1)	62(1)				53(1)	40(1)		125			
		Bottom of borehole at 64.6 feet.																

(1) = Assumed, (2) = Actual, (3) = Phi' 0

LPILE SUMMARY - MODOT_20150812.GDT - 4/25/16 08:13 - J:\SG\GINT\PROJECT FILES\J9S3145-A8474.GPJ

Sheet No. 20 of 21

Y:\16019 TWM Stoddard County Bridge\DGN\Bridge\Final\Plotsheets\B_A8474_020_J9S3145_Boring 1.dgn 7:49:41 AM 9/19/2016

EFK•Moen, LLC
Civil Engineering Design
13523 Barrett Parkway Dr
Suite 250
St. Louis, MO 63021 Phone 314-394-3100
Missouri Certificate of Authority: 001578

MISSOURI HIGHWAYS AND TRANSPORTATION COMMISSION
MoDOT
105 WEST CAPITOL
JEFFERSON CITY, MO 65102
1-888-ASK-MODOT (1-888-275-6636)

DATE	DESCRIPTION

BRIDGE NO. A8474
PROJECT NO.
CONTRACT ID.
JOB NO. J9S3145
COUNTY STODDARD
DISTRICT BR
ROUTE H
SHEET NO. 20
STATE MO
DATE PREPARED 9/19/2016

STATE OF MISSOURI
CHRIS LINNEMAN
NUMBER PE-2002016090
REGISTERED PROFESSIONAL ENGINEER

REV.

IF A SEAL IS PRESENT ON THIS SHEET IT HAS BEEN ELECTRONICALLY SEALED AND DATED

Missouri Department of Transportation
Construction and Materials

BORING NO. A-16-07
Page 1 of 2

Job No.: J9S3145	**County:** Stoddard	**Route:** H	
Design: A8474	**Skew:**	**Location:** Over County Drainage Ditch	
Bent:	**Logged By:** Ricardo Todd	**Operator:** Kenny Mathews	
Station: 276+75.0	**Northing:** 324831.9	**Date of Work:** 01/14/16-01/14/16	
Offset: 20.0L	**Easting:** 950538.8	**Depth to Water:** 2.0	
Elevation: 330.0	**Requested Northing:**	**Depth Hole Open:** 24.1	
Requested Station:	**Requested Easting:**	**Time Change:** 1 hour	
Requested Offset:	**Equipment:** Failing 1500 ,Split-Spoon Sampler		
Requested Elevation:	**Location Note:** About 9.8 Miles Southwest of Dexter		
Drill No.: G-7837	**Hammer Efficiency:** 79%	**Drilling Method:** Mud Rotary	

Depth (ft)	Graphic	Description	Elevation (ft)	Sample Type	REC % (RQD %)	Blow Counts (N_{60})	Shear Data	Field Tests	Index Tests
0		0.0-5.3' Brown, LEAN CLAY trace fine gravel, stiff, moist	330						
5			325						
		5.3-15.1' Bluish gray, LEAN CLAY, stiff to very stiff, moist			67	4-7-6 (17)		PP = 1.50 tsf	
10			320						
					73	5-6-9 (20)		PP = 2.25 tsf	MC = 29.7%, γ_{sat} = 121 pcf(1), LL = 42, PL = 21
15		15.1-25.1' Brownish gray, LEAN CLAY trace sand, very stiff, moist	315		73	8-10-11 (28)		PP = 2.75 tsf	MC = 25.4%, γ_{sat} = 125 pcf(1), LL = 36, PL = 22
20			310						
					67	12-17-17 (45)		PP = 3.50 tsf	MC = 24.0%, γ_{sat} = 126 pcf(1), LL = 24, PL = 20
25		25.1-30.0' Gray, CLAYEY SAND, medium dense, moist, fine grained	305		67	8-8-10 (24)			
30		30.0-66.5' Gray, SAND, medium dense to dense, moist to wet, fine grained, poorly graded	300		67	5-8-10 (24)			
35			295						

N_{60} = (Em/60)Nm N_{60} - Corrected N value for standard 60% SPT efficiency; Em - Measured hammer efficiency in percent; Nm - Observed N-value
(1) = Assumed, (2) = Actual

Coordinate System: U.S. State Plane 1983 **Coordinate Zone:** Missouri East **Coordinate Proj. Factor:**

Coordinate Datum: NAD 83 (CONUS) **Coordinate Units:** U.S. Survey Feet

* Persons using this information are cautioned that the materials shown are determined by the equipment noted and accuracy of the "log of materials" is limited thereby and by judgement of the operator. THIS INFORMATION IS FOR DESIGN PURPOSES ONLY.

LETTER BOREHOLE - MODOT 20150728.GDT - 4/25/16 07:51 - J:\SGG\INT\PROJECT FILES\J9S3145-A8474.GPJ

Missouri Department of Transportation
Construction and Materials

BORING NO. A-16-07
Page 2 of 2

Job No.: J9S3145	**County:** Stoddard	**Route:** H	
Design: A8474	**Skew:**	**Location:** Over County Drainage Ditch	
Bent:	**Logged By:** Ricardo Todd	**Operator:** Kenny Mathews	
Station: 276+75.0	**Northing:** 324831.9	**Date of Work:** 01/14/16-01/14/16	
Offset: 20.0L	**Easting:** 950538.8	**Depth to Water:** 2.0	
Elevation: 330.0	**Requested Northing:**	**Depth Hole Open:** 24.1	
Requested Station:	**Requested Easting:**	**Time Change:** 1 hour	
Requested Offset:	**Equipment:** Failing 1500 ,Split-Spoon Sampler		
Requested Elevation:	**Location Note:** About 9.8 Miles Southwest of Dexter		
Drill No.: G-7887	**Hammer Efficiency:** 79%	**Drilling Method:** Mud Rotary	

Depth (ft)	Graphic	Description	Elevation (ft)	Sample Type	REC % (RQD %)	Blow Counts (N_{60})	Shear Data	Field Tests	Index Tests
35		30.0-66.5' Gray, SAND, medium dense to dense, moist to wet, fine grained, poorly graded *(continued)*	295		67	16-19-19 (50)			
40			290		67	16-22-24 (61)			
45			285		67	14-17-27 (58)			
50			280		67	21-20-24 (58)			
55			275		67	22-27-23 (66)			
60			270						
65			265		67	21-35-37 (95)			
		Bottom of borehole at 66.5 feet.							

N_{60} = (Em/60)Nm N_{60} - Corrected N value for standard 60% SPT efficiency; Em - Measured hammer efficiency in percent; Nm - Observed N-value
(1) = Assumed, (2) = Actual

Coordinate System: U.S. State Plane 1983 **Coordinate Zone:** Missouri East **Coordinate Proj. Factor:**

Coordinate Datum: NAD 83 (CONUS) **Coordinate Units:** U.S. Survey Feet

* Persons using this information are cautioned that the materials shown are determined by the equipment noted and accuracy of the "log of materials" is limited thereby and by judgement of the operator. THIS INFORMATION IS FOR DESIGN PURPOSES ONLY.

LETTER BOREHOLE - MODOT 20150728.GDT - 4/25/16 07:51 - J:\SGG\INT\PROJECT FILES\J9S3145-A8474.GPJ

Note: For locations of boring, see Sheet No. 1.

BORING DATA

Detailed JUL 2016
Checked JUL 2016

Note: This drawing is not to scale. Follow dimensions.

STATE OF MISSOURI
CHRIS LINNEMAN
NUMBER PE-2002016690
REGISTERED PROFESSIONAL ENGINEER

THIS SHEET HAS BEEN SIGNED, SEALED AND DATED ELECTRONICALLY.

DATE PREPARED	
9/19/2016	
ROUTE: H	STATE: MO
DISTRICT: BR	SHEET NO.: 21
COUNTY: STODDARD	
JOB NO.: J9S3145	
CONTRACT ID.	
PROJECT NO.	
BRIDGE NO.: A8474	

DATE	DESCRIPTION

MISSOURI HIGHWAYS AND TRANSPORTATION COMMISSION
MoDOT
105 WEST CAPITOL
JEFFERSON CITY, MO 65102
1-888-ASK-MODOT (1-888-275-6636)

IF A SEAL IS PRESENT ON THIS SHEET IT HAS BEEN ELECTRONICALLY SEALED AND DATED

EFK•Moen, LLC
Civil Engineering Design
13523 Barrett Parkway Dr
Suite 250
St. Louis, MO 63021 Phone 314-394-3100
Missouri Certificate of Authority: 001578

REV.

MISSOURI STATE HIGHWAY DEPARTMENT

FED. ROAD DIST. NO.	STATE	FED. AID PROJ. NO.	FISCAL YEAR	SHEET NO.	TOTAL SHEETS
5	MO.	SH-S2	19		

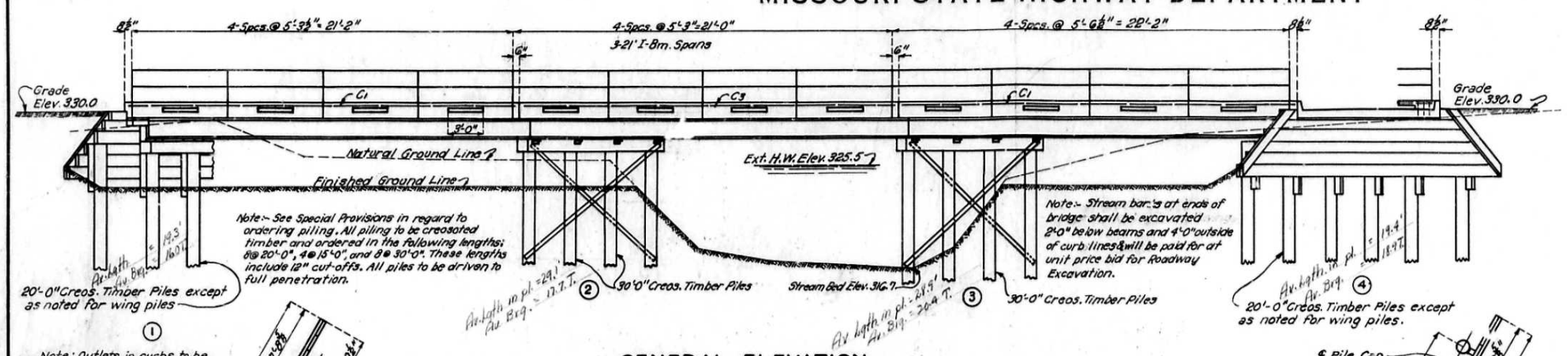

GENERAL ELEVATION

Note: Outlets in curbs to be centered between rail posts.

BILL OF REINFORCING STEEL

No.	Size	Length	Mark	Location
16	⅜"φ	22'-0"	C1	Curb
86	⅜"φ	2'-0"	C2	"
8	½"φ	20'-9"	C3	"
162	⅜"φ	20'-9"	S1	Slab
52	½"φ	22'-0"	S2	"
108	⅜"φ	23'-0"	S3	"
12	½"φ	22'-9"	S4	"
26	½"φ	20'-9"	S5	"

Bending Sketch and Cutting Diagrams

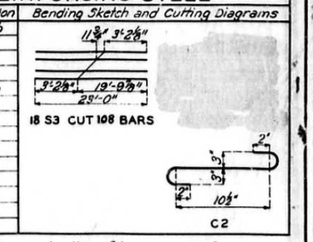

Note: Dimensions given are along center line of bars and are for computed lengths.

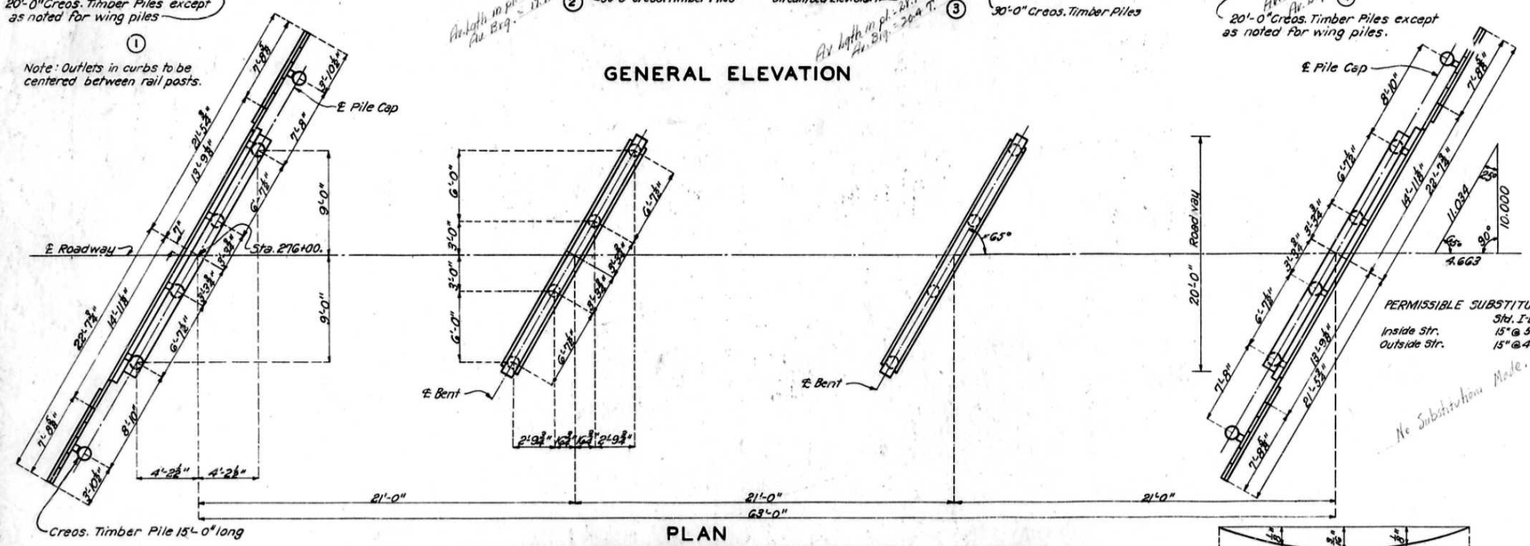

PLAN

GENERAL NOTES:

Loading: One 10 Ton Truck, 80% of weight on rear axle, 30% impact, 14'-0" wheel base, 6'-0" gage, 10" tire.
All concrete to be 1:2:3½ mix "X".
Exposed edges to be beveled ¾" where no other bevel is noted.
All timber to be creosoted Douglas Fir of the West Coast Region, Close-grained Structural Grade; creosoted Southern Yellow Pine, Dense Structural Square Edge and Sound Grade; or untreated California Redwood, Prime Structural Grade. Timber rough full-sawn except as noted in timber bill for pile caps. Slight variations in sawing to be in accordance with grading rules. All treated timber to be cut to lengths, shaped and bored as shown before treating. Backing plank are all billed 6" long and are to be fitted and cut in the field.
Field holes for drift pins shall be field bored 23/32"φ. Unless otherwise noted all other field holes in timber shall be field bored ¾"φ.
When bolts with countersunk heads are indicated on plans cut washers shall be used under heads. O.G. washers shall be used under heads of all other bolts and under nuts of all bolts.
Cost of substructure hardware to be included in price bid for timber in place.
I-Beams with fastenings, spacers, handrail, handrail posts with fastenings, clip angles and cap plate on end bent with fastenings, will be paid for as structural steel. Cost of metallic edge moulding will be included in unit bid price for concrete.
Rivets ¾"φ, holes 13/16"φ, except in handrail where rivets shall be ⅝"φ, holes 11/16"φ. Field connections for handrail shall be ¾"φ button head bolts, 13/16"φ holes. All other field connections shall be ¾"φ machine bolts, 13/16"φ holes. ~~[illegible]~~
Detail shop drawings shall be submitted to the State Highway Department in duplicate and shall be approved before steel is fabricated.
Where rubber compound is specified on plans for use in parthion and expansion joints, the premoulded joint shall be securely stitched to one face of concrete with copper wire.
See Special Provisions in regard to permissible substitution of beams.
Bridge excavation will be allowed for all bents within horizontal limits shown and noted on sheet #2. This excavation will be computed from existing ground line to bottom end of 6"x6" backing supports for end bents and to bottom of sway bracing for interior bents.
Paint: Shop, none: Field, contact surfaces with bolted field connections one coat of red lead. No other paint to be applied by contractor. All paint required will be furnished by the Missouri State Highway Department.

PERMISSIBLE SUBSTITUTIONS:-

	Std. I-Bms.	Beth. Bms.
Inside Str.	15" @ 50#	16" @ 40#
Outside Str.	15" @ 45#	16" @ 39#

No Substitution Made.

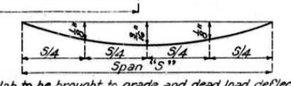

Note: Floor slab to be brought to grade and dead load deflection taken care of by increasing slab thickness. Depth of slab at outside face of curb to be kept uniform and bottom surface of slab warped between curb and outside beam to obtain required thickness at beam. Payment will be allowed for additional concrete required for thickening slab. This additional concrete is included in "Estimated Quantities."

SUBSTRUCTURE TIMBER BILL

PIECE	NO. PCS.	SIZE	LENGTH	REMARKS
Backing Plank	2	3"x12"	25'-9½"	Cut to length.
" "	2	3"x12"	19'-10"	" " "
" "	2	3"x12"	24'-8⅝"	Cut to length.
" "	2	3"x12"	17'-0½"	" " "
" "	2	3"x12"	22'-0"	" " "
" "	2	3"x12"	16'-6⅝"	" " "
" "	2	3"x12"	21'-6"	" " "
" "	2	3"x12"	13'-8⅝"	" " "
" "	2	3"x12"	18'-8"	" " "
" "	2	3"x12"	15'-2½"	" " "
Edge Support	4	3"x12"	11'-2½"	" " " and shape
Shoulder Plank	2	3"x8"	2'-10½"	" " " " " "
" "	2	3"x8"	2'-8⅝"	" " " " " "
Backing Support	8	6"x6"	6'-0"	" " " " "
" "	4	6"x6"	4'-0"	" " " " "
Backing Support Cap	2	6"x6"	23'-4⅝"	Cut to length.
Pile Cap	4	12"x12"	22'-4½"	Cut to length. *
Sway Bracing	4	3"x8"	23'-6"	Cut to length.

SHAPING AND BORING SKETCHES

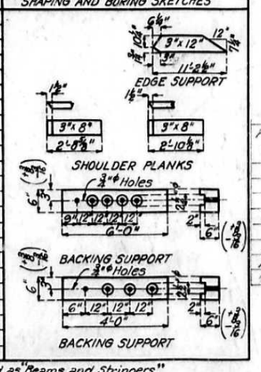

* S2S to exactly 11½" depth.

Note: Pile caps to be classified as "Beams and Stringers." All other timber to be classified as "Joists and Plank."

DEAD LOAD DEFLECTION DIAGRAM

ESTIMATED QUANTITIES

FINAL QUAN.	ITEM		SUPERSTR.	SUBSTR.	TOTAL
96.5	Excavation Class 1	Cu. Yds.		105	105
444	Creos. Timber Piling	Lin. Ft.		440	440
20	Creos. Timber Piling Cutoffs	Lin. Ft.		20	20
2860	Timber (See Special Provisions)	F. B. M.		2860	2860
30.3	Concrete 1:2:3½ mix, Class "X"	Cu. Yds.	30.3		30.3
8120	Reinforcing Steel	Lbs.	8120		8120
16,610	Fab. Structural Steel	Lbs.	16500		16500
@ 100.00	Bridge Removal	L. Sum			

Note: All bridge excavation will be paid for as Class 1 Bridge Excavation.

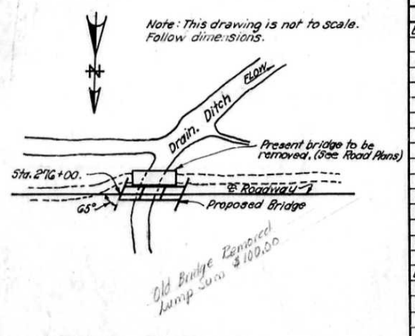

LOCATION SKETCH

B.M. #25 Elev. 327.59 N.I.R. of 12" Poplar 15' Rt. Sta. 274+45.

BRIDGE OVER COUNTY DRAINAGE DITCH

STATE ROAD FROM ROUTE 25 TO BRADYVILLLE

ABOUT 9.8 MILES S.W. OF DEXTER

PROJECT NO. SH-S2 STA 276+00.

FINISHED

STODDARD COUNTY

SUBMITTED BY P. R. Sack BRIDGE ENGINEER DATE 11/17/32

APPROVED BY T. H. Cutler CHIEF ENGINEER DATE 11/17/32

FINISHED

Drawn Jan. 1931 By R.J.G.
Traced Jan. 1931 By R.J.G.
Checked Feb. 1931 By [illegible]
Assembled Nov. 1932 By A.O.U. & H.E.C.
Checked Nov. 1932 By RRB.

Sheet No. 1 of 2.

S-613

170

10-15-32

MISSOURI STATE HIGHWAY DEPARTMENT

FED. ROAD DIST. NO.	STATE	FED. AID PROJ. NO.	FISCAL YEAR	SHEET NO.	TOTAL SHEETS
5	MO.	SH-52	19		

Note: Space dowel bars "C2" at approximately 12" cts. in curbs between outlets and at ends.

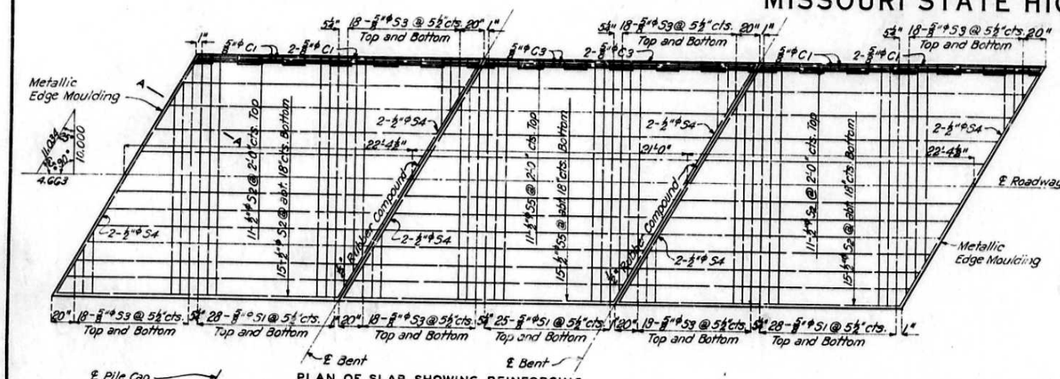

PLAN OF SLAB SHOWING REINFORCING

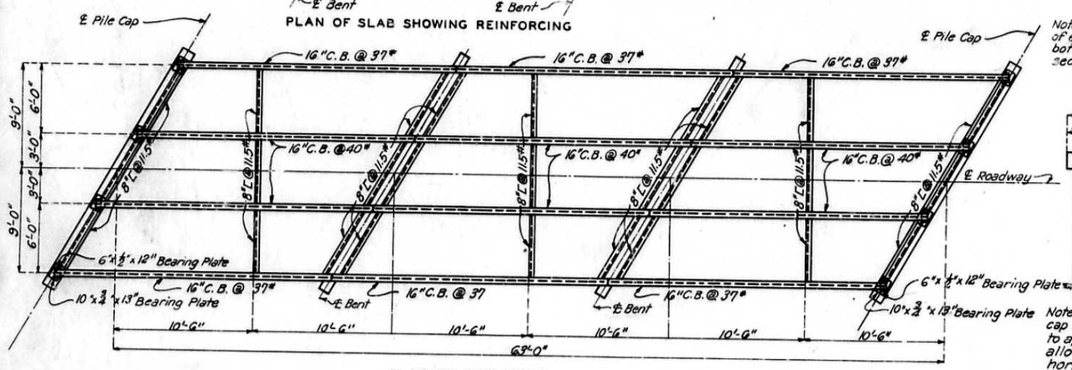

PLAN OF STRINGERS

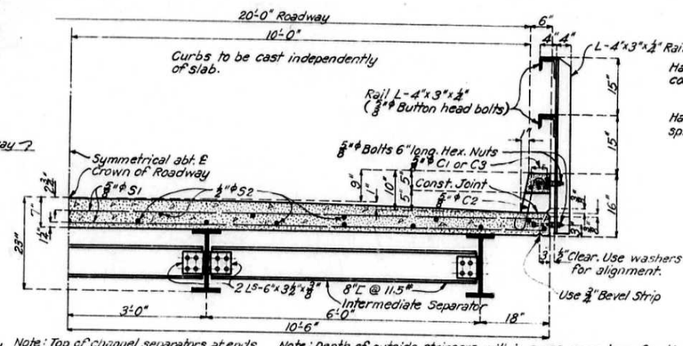

Note: Top of channel separators at ends of each I-Beam Span to be flush with bottom of Floor Slab as shown in section thru end bent at ℄.

Note: Depth of outside stringers will in some cases be a fraction of an inch less than that of inside stringers and in order to keep bottom of slab horizontal it will be necessary to haunch slab down to top of outside stringers.

HALF SECTION THRU SPAN

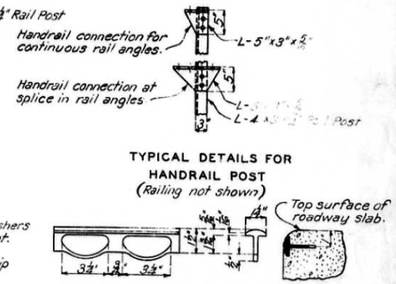

TYPICAL DETAILS FOR HANDRAIL POST
(Railing not shown)

Note: An approved equivalent may be substituted for edge moulding shown above.

METALLIC EDGE MOULDING

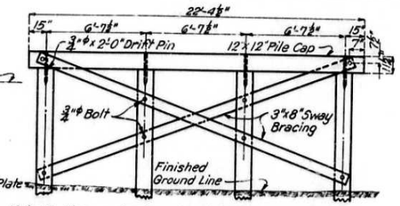

Note: Omit sway bracing when distance from bottom of pile cap to ground is less than 5'-0". Carry sway bracing down to approximately Elev. 320.0. Excavation will be allowed for interior bents within the maximum horizontal limits of 4'-8" in width and 22'-4½" in length.

DETAIL OF INTERIOR BENTS

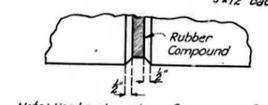

Note: Use bevel as shown for exposed faces of all joints consisting of rubber compound except at top surface of roadway slab. Use edging tool with ½" radius at top surface of roadway slab each side of rubber compound joint.

DETAIL OF BEVEL FOR RUBBER COMPOUND JOINTS

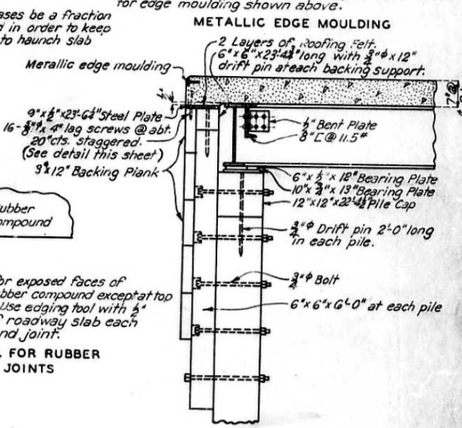

SECTION A-A THRU END BENT

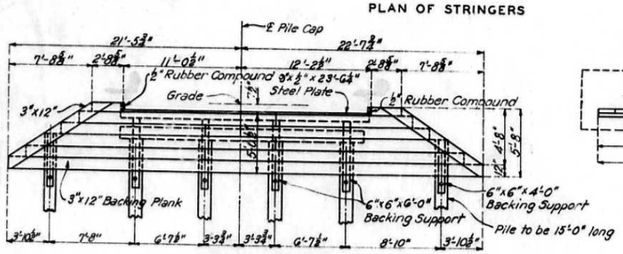

ELEVATION OF END BENT

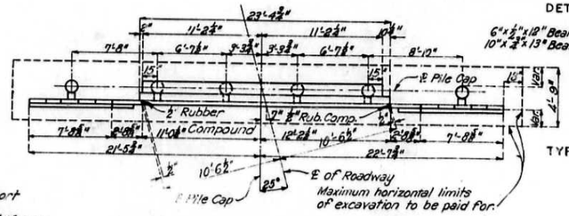

PLAN OF END BENT

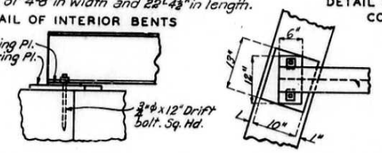

TYPICAL BEARING OVER END BENT

PLAN OF BEARING PLS.

DETAILS OF BEARING ON PILE CAP

Note: Cast iron clamps used on bearing plates to have ⅛" clearance at flange of beam to allow for expansion. All clamps to have ⅞"φ cored holes. Use two clamps only on each I-Beam at pile caps on end bents.

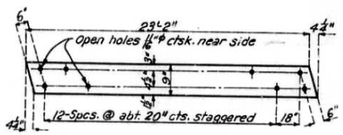

END BENT CAP PLATE

Note: Any irregularity in alignment of piling in end bents to be corrected by facing one surface of the 6"x6" backing support or by varying the thickness of the backing support such as to place the surface of the backing in a true plane and eliminate any strain on the backing plank. Splice in backing plank to be made at center of 6"x6" backing support and to be alternated on the two intermediate supports.

NAILING SCHEDULE:

Backing plank to supports, 3-50d at each support; at splices, 3-50d each side of splice. Pieces at ends of backwall to backing plank; 4-50d to each backing plank.

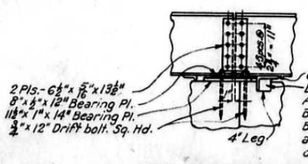

FIXED JOINT OVER INT. BENT

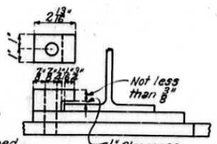

FOR CARNEGIE BEAMS
DETAILS OF FLANGE CLAMP

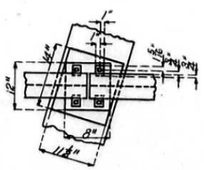

PLAN OF BEARING PLS.

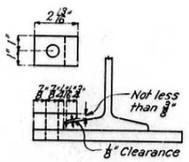

FOR STD. & BETH. BEAMS
DETAILS OF FLANGE CLAMPS

DETAILS OF BEARING ON PILE CAP

BRIDGE OVER COUNTY DRAINAGE DITCH

STATE ROAD FROM ROUTE 25 TO BRADYVILLE

ABOUT 9.8 MILES S.W. OF DEXTER

PROJECT NO. SH-52 STA 276+00.

STODDARD COUNTY

FINISHED

Drawn Jan. 1931 By R.J.G.
Traced Jan. 1931 By R.J.G. Assembled Nov. 1932 By A.O.U. & H.E.C.
Checked Feb. 1931 By J.K.T. Checked Nov. 1932 By R.M.S.

Note: This drawing is not to scale. Follow dimensions.

FINISHED

Sheet No. 2 of 2.

S-613

10-15-32