SOLAR TRUCK MOUNTED ARROW PANEL

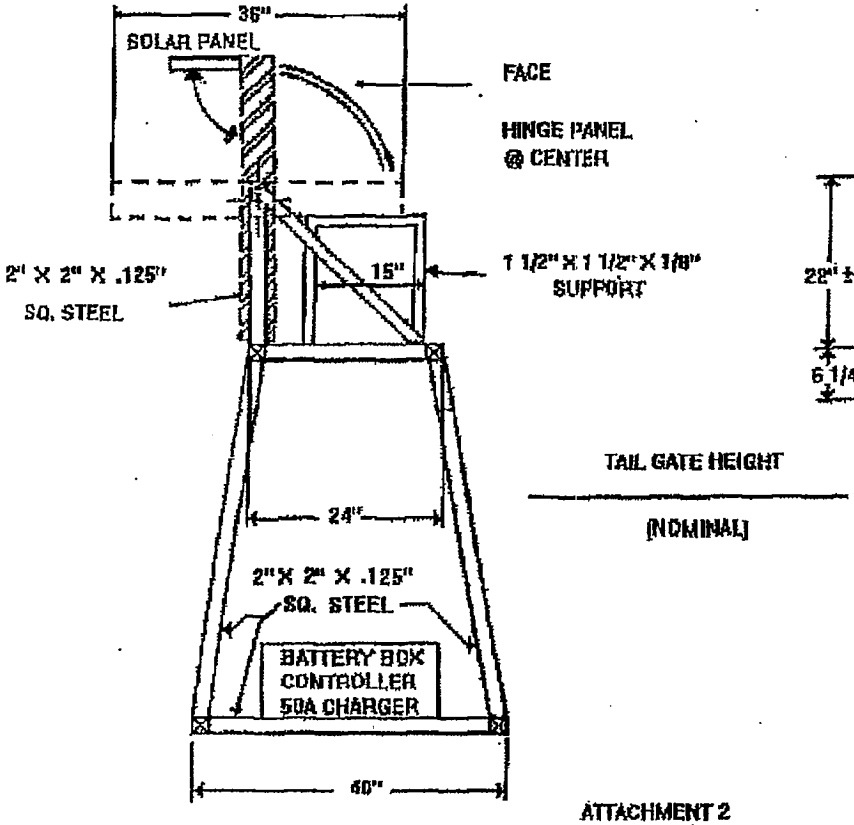

TAIL GATE HEIGHT

(NOMINAL)

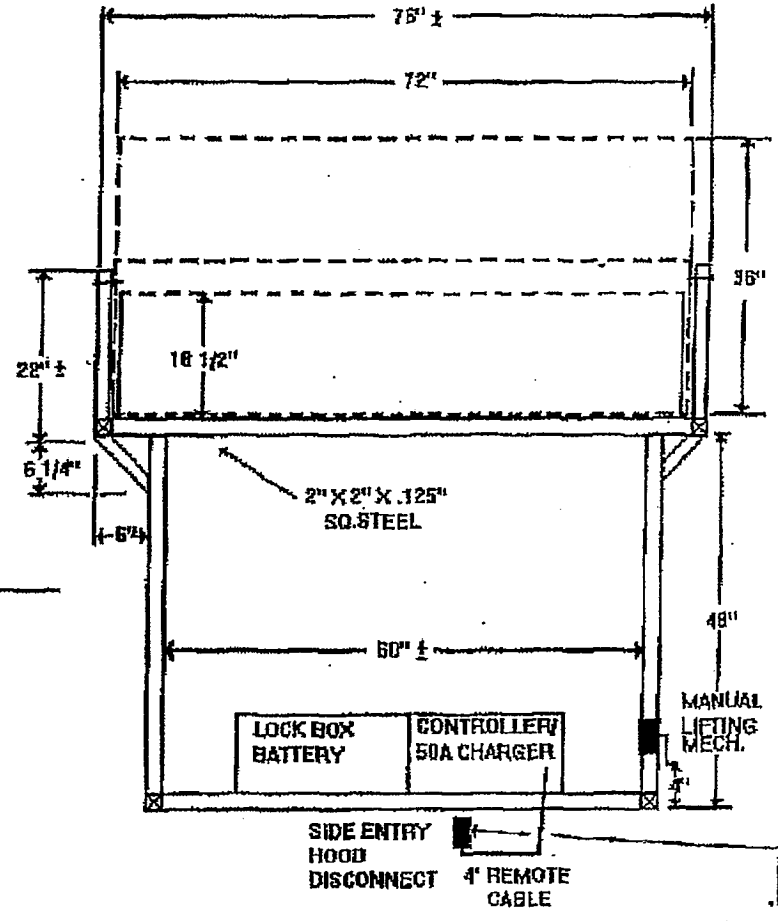

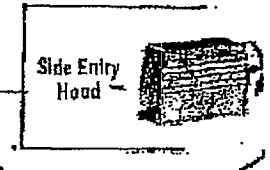

ATTACHMENT 2

DASH TOP MOUNT
REMOTE CONTROL

30' REMOTE CABLE

BASE WITH COVER DISCONNECT
WATER/CHEMICAL CABLE SEALS

M & T 6/97

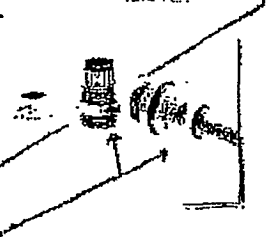

ST-SKINTOP

This patented cable connector is manufactured from an impact resistant thermoplastic resin. The ST top is waterproof, flame resistant and corrosion resistant to salt water, gasoline, alcohol oil, grease, common solvents, weak acids and weak alkalis.

A sealing nut and internal retract coolant is necessary in cable