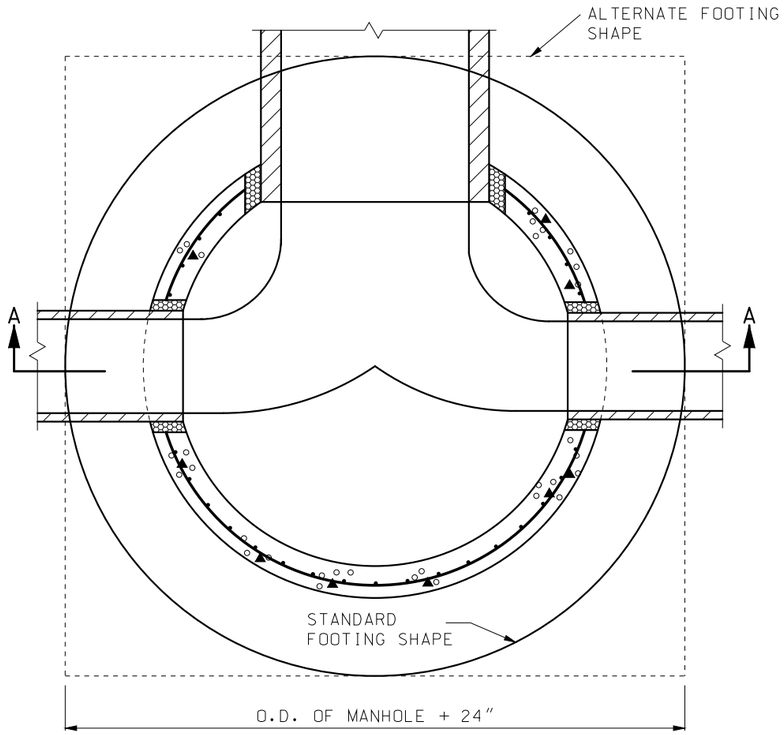

PLAN OF FOOTING

BASE SECTION DIMENSIONS*	
SIZE OF PIPE	MIN. DIA.
24" OR SMALLER	48"
30" - 36"	60"
42" - 48"	72"

* RISER SECTIONS SHALL NOT BE LESS THAN 42" DIAMETER.

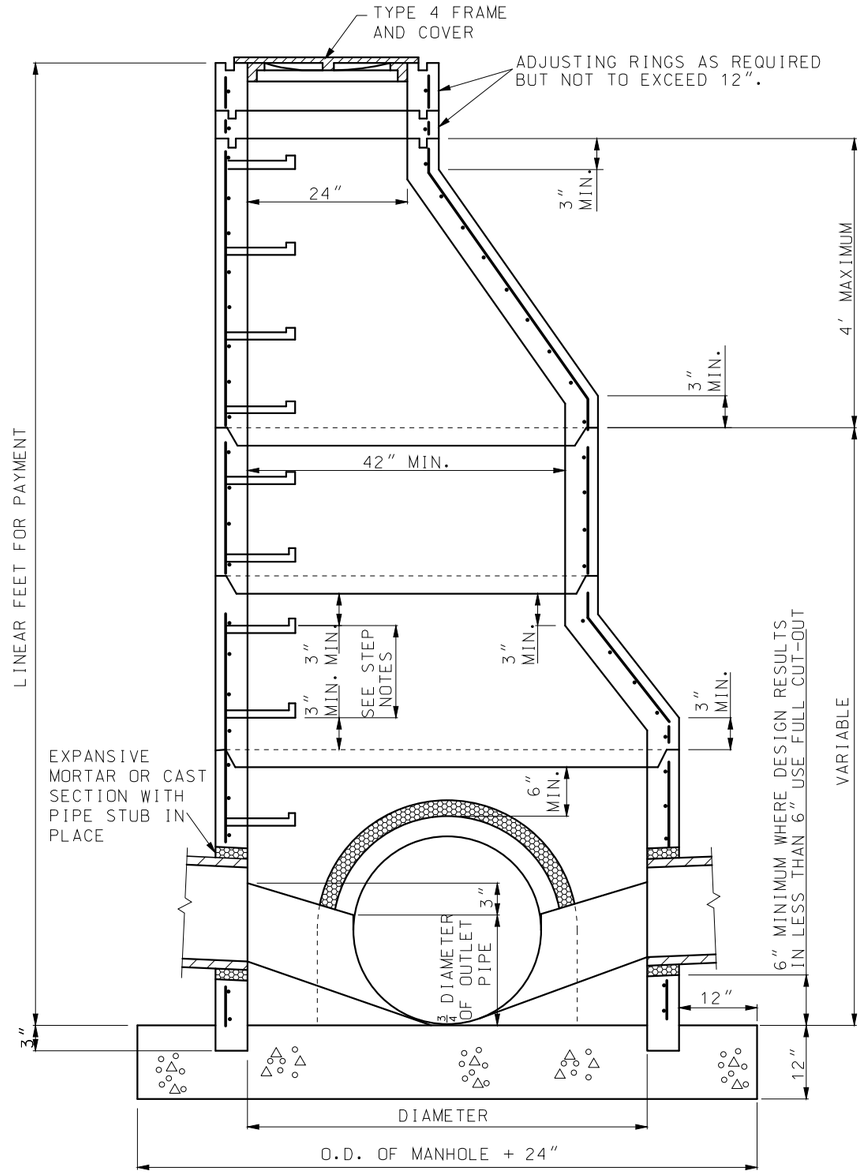

PRECAST BASE SECTION SET ON CONCRETE BLOCKS FOUNDATION SLAB AND INVERT POURED MONOLITHIC.

SECTION A-A

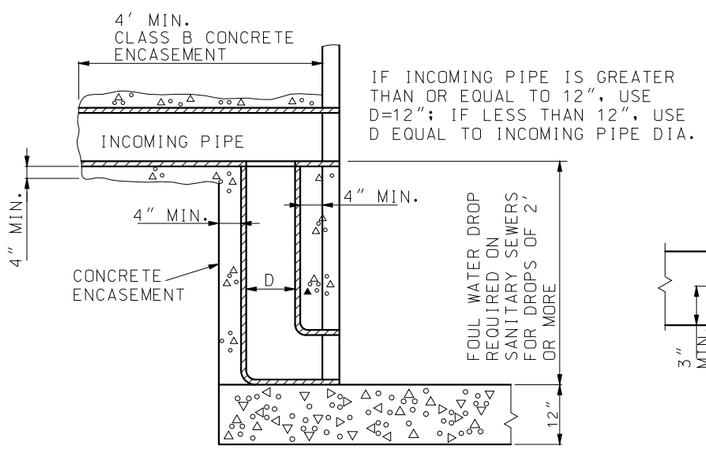

FOUL WATER DROP

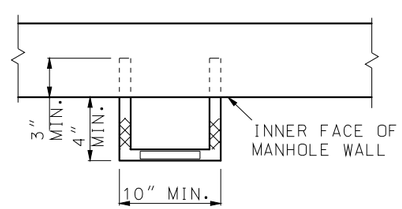

STEP INSTALLATION

STEPS SHALL BE PLACED AT VERTICAL INTERVALS OF 16" MAXIMUM IN ALL MANHOLES HAVING A DEPTH OF MORE THAN 4'. STEPS SHALL BEGIN AT AN ELEVATION 6" ABOVE THE TOP OF THE OUTLET PIPE.

STEPS SHALL BE LEVEL AND IN VERTICAL ALIGNMENT.

NO DIRECT PAYMENT WILL BE MADE FOR MANHOLE STEPS.

GENERAL NOTES:

THE CONTRACTOR WILL BE PERMITTED TO CAST IN PLACE THE MANHOLES, IN ACCORDANCE WITH THE CONCRETE MANHOLE STANDARD.

IF THE CONTRACTOR ELECTS TO CAST IN PLACE THE MANHOLES, PAYMENT WILL BE MADE AT THE CONTRACT UNIT PRICE FOR PRECAST MANHOLES.

THE CONFIGURATION DETAILS SHOWN ARE DESCRIPTIVE ONLY AND MAY BE VARIED TO CONFORM WITH AN ESTABLISHED MANUFACTURING PROCEDURE.

FORMED OR CUT OUT OPENINGS SHALL BE PROVIDED WHERE PIPE INLETS AND OUTLETS ARE SHOWN ON THE PLANS.

THE TOP OF THE INLET SHALL NOT BE SET BELOW THE TOP OF THE OUTLET PIPE.

REINFORCEMENT SHALL BE CUT AT PIPE OPENINGS.

NO DIRECT PAYMENT WILL BE MADE FOR CUTTING PIPE, NOR FOR CUTTING AND BENDING REINFORCING STEEL.

WHERE THE WIDTH OF THE BASE SECTION IS GREATER THAN 42" AN ECCENTRIC TAPER SECTION MAY BE USED TO ALLOW THE USE OF 42" RISER SECTIONS.

THE LOWER TRANSITION SECTION AS SHOWN ON SECTION A-A IS OPTIONAL.

FOUL WATER DROPS ARE REQUIRED WHEN SPECIFIED IN THE PLANS. NO DIRECT PAYMENT WILL BE MADE FOR THE FOUL WATER DROP OR ITS ENCASEMENT.

SEE STANDARD PLAN 614.30 FOR MANHOLE FRAMES AND COVERS.

WHERE PIPES DO NOT ENTER OR EXIT RADIALLY, USE NEXT LARGER SIZE MANHOLE. CLASS 3 EXCAVATION WILL BE PAID WITHIN VERTICAL LIMITS 18" OUTSIDE OF THE OUTER WALLS OF THE BASE SECTION ON THE MANHOLE, CLASS 3 EXCAVATION WILL NOT BE PAID FOR OUTSIDE THE FOOTING LIMITS.

ALL PIPE CONNECTED WITH A MANHOLE WILL BE MEASURED AND PAID FOR TO THE INSIDE WALL OF THE MANHOLE.

CIRCUMFERENTIAL REINFORCEMENT SIZE AND PLACEMENT SHALL BE IN ACCORDANCE WITH THE STANDARD SPECIFICATIONS TO A MAXIMUM DEPTH OF 20 FEET. OVER 20 FOOT DEPTH CIRCUMFERENTIAL REINFORCEMENT IS INCREASED TO 0.24 SQUARE INCHES STEEL REQUIRED PER LINEAR FOOT, TO A MAXIMUM DEPTH OF 30 FEET.

FOR PIPE CONNECTIONS, A RUBBER GASKET IN ACCORDANCE WITH ASTM RUBBER GASKET SPECIFICATIONS C-443 OR C-923 AND CAST INTEGRALLY IN MANHOLE MAY BE USED AS AN ALTERNATE TO EXPANSIVE MORTAR.

MISSOURI HIGHWAYS AND TRANSPORTATION COMMISSION
105 WEST CAPITOL
JEFFERSON CITY, MO 65102
1-888-ASK-MODOT (1-888-275-6636)

STATE OF MISSOURI
ERIC E. SCHROETER
NUMBER PE-28411
PROFESSIONAL ENGINEER
THIS SHEET HAS BEEN SIGNED, SEALED AND DATED ELECTRONICALLY.

PRECAST MANHOLES

DATE EFFECTIVE: 07/01/2016	731.00U	SHEET NO.
DATE PREPARED: 5/13/2016		1 OF 2

IF A SEAL IS PRESENT ON THIS SHEET IT HAS BEEN ELECTRONICALLY SEALED AND DATED.

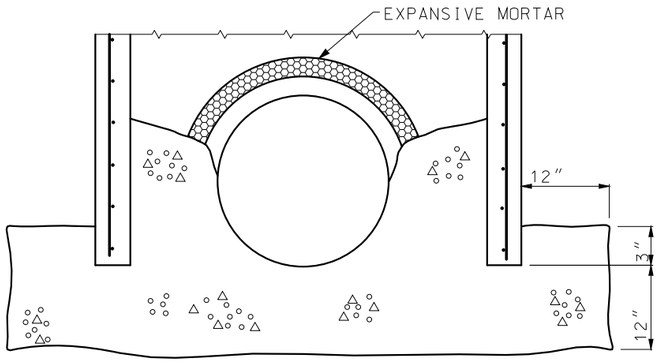

ALTERNATE FOOTING

PRECAST BASE SECTION SET ON CONCRETE BLOCKS FOUNDATION SLAB AND INVERT POURED MONOLITHIC.

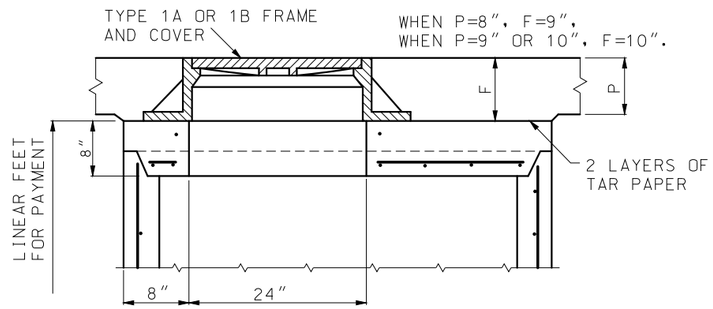

FLAT SLAB MANHOLE TOP (PAVED AREA)

SECTION B-B

SECTION C-C

S = 0 FOR DEPTHS LESS THAN OR EQUAL TO 6';
S = 9" FOR DEPTHS GREATER THAN 6'.

T = 6" FOR DEPTHS OR LESS THAN OR EQUAL TO 6';
T = 9" FOR DEPTHS GREATER THAN 6'.

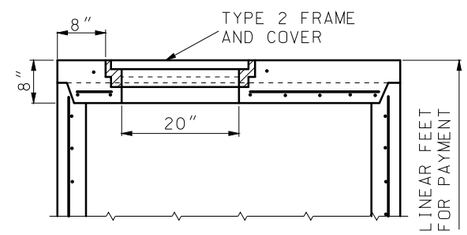

ALTERNATE SECTION B-B

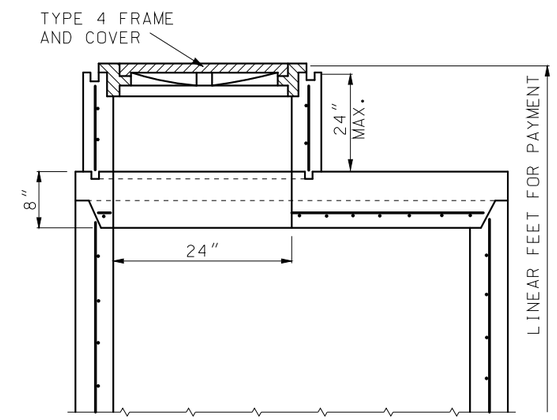

ALTERNATE MANHOLE TOP

ALTERNATE FLAT SLAB MANHOLE TOP (UNPAVED AREA) USED WHERE DEPTH OF MANHOLE WILL NOT PERMIT USE OF CONE AND TAPER SECTIONS.

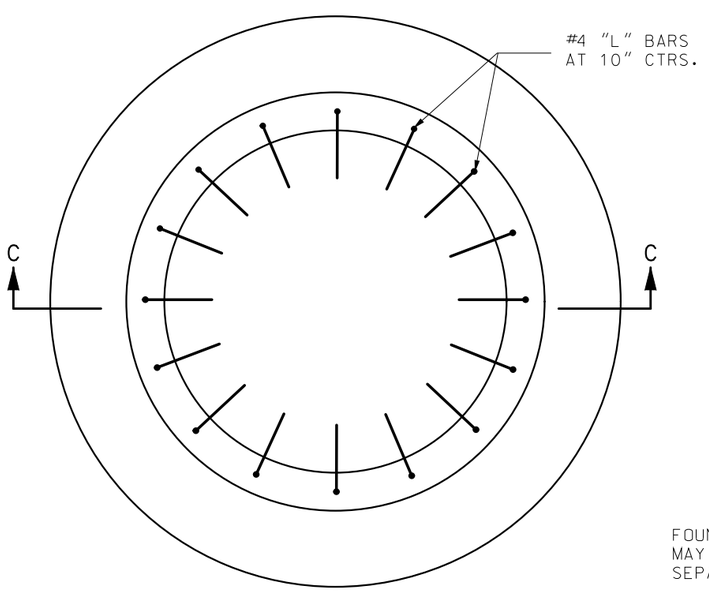

PRECAST FOUNDATION SLAB

FOUNDATION SLAB AND BASE SECTION MAY BE POURED MONOLITHIC OR SEPARATELY WITH A KEYWAY.

INVERT SHALL BE POURED AFTER PLACEMENT OF MANHOLE.

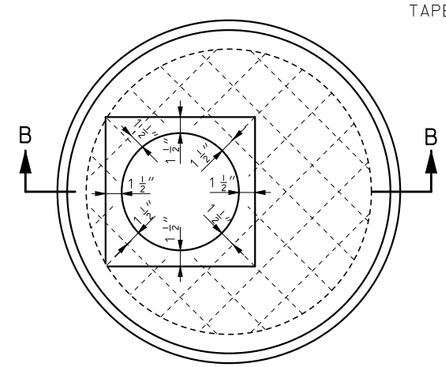

PLAN OF FLAT SLAB MANHOLE TOP

MISSOURI HIGHWAYS AND TRANSPORTATION COMMISSION
105 WEST CAPITOL
JEFFERSON CITY, MO 65102
1-888-ASK-MODOT (1-888-275-6636)

STATE OF MISSOURI
ERIC E. SCHROETER
NUMBER PE-28411
PROFESSIONAL ENGINEER
THIS SHEET HAS BEEN SIGNED, SEALED AND DATED ELECTRONICALLY.

PRECAST MANHOLES

DATE EFFECTIVE: 07/01/2016
DATE PREPARED: 5/13/2016

731.00U

SHEET NO. 2 OF 2

IF A SEAL IS PRESENT ON THIS SHEET IT HAS BEEN ELECTRONICALLY SEALED AND DATED.