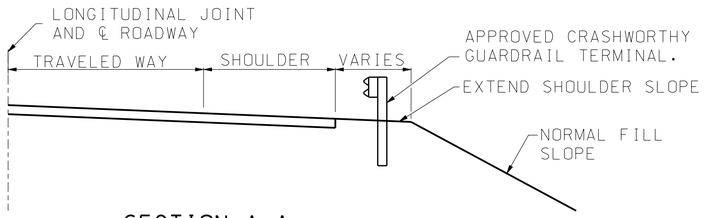

SECTION A-A

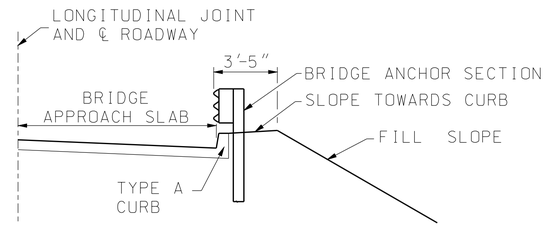

NOTE: FOR DETAILS NOT SHOWN,
SEE OTHER SECTIONS.

SECTION D-D
THRU BRIDGE ANCHOR SECTION

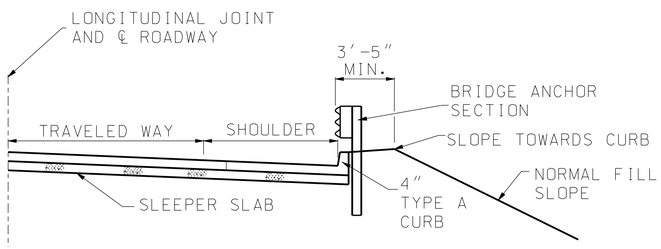

SECTION C-C

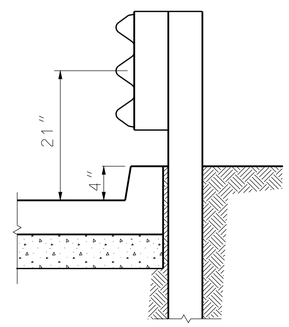

GUARD RAIL AT BARRIER CURB

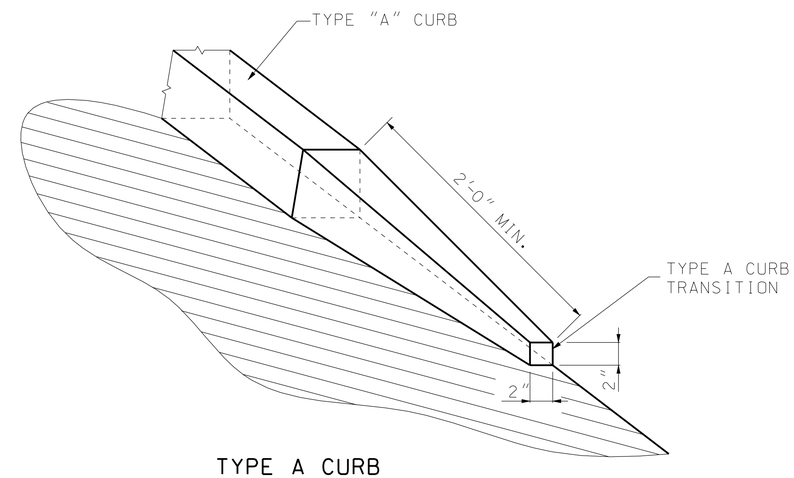

TYPE A CURB
TRANSITION DETAIL

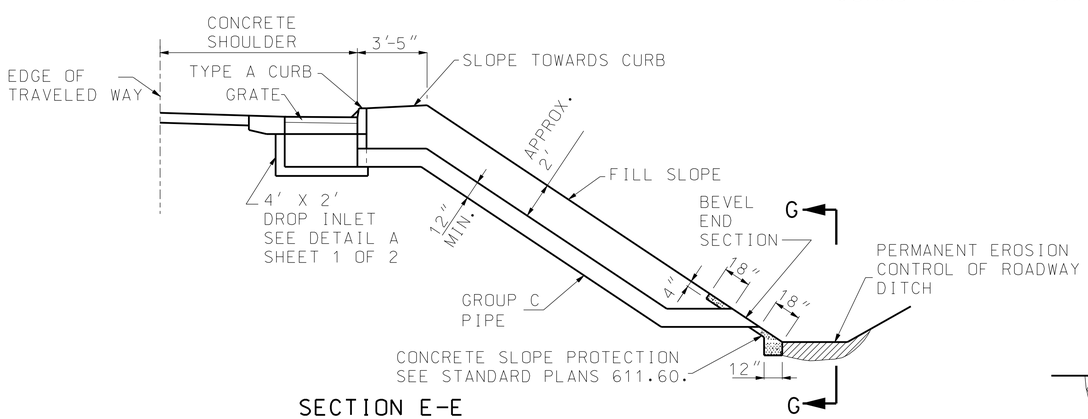

SECTION E-E

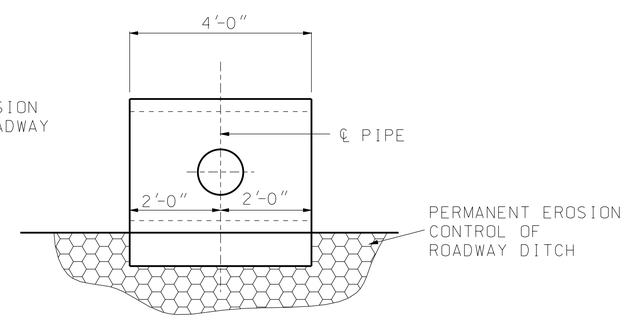

SECTION G-G

GENERAL NOTE:

FOR LOCATION OF SEC. A-A, C-C, D-D, AND E-E, SEE SHEET 1 OF 2.

MISSOURI HIGHWAYS AND TRANSPORTATION COMMISSION
105 WEST CAPITOL
JEFFERSON CITY, MO 65102
1-888-ASK-MODOT (1-888-275-6636)

STATE OF MISSOURI
KATHRYN PHILLIPS HARVEY
NUMBER PE-23751
PROFESSIONAL ENGINEER
THIS SHEET HAS BEEN SIGNED, SEALED AND DATED ELECTRONICALLY.

DRAIN BASIN, SHOULDER PAVING AND FILL SLOPE AT BRIDGE ENDS

DATE EFFECTIVE: 02/01/2009
DATE PREPARED: 8/21/2009

609.40P

SHEET NO.
2 OF 2

IF A SEAL IS PRESENT ON THIS SHEET IT HAS BEEN ELECTRONICALLY SEALED AND DATED.