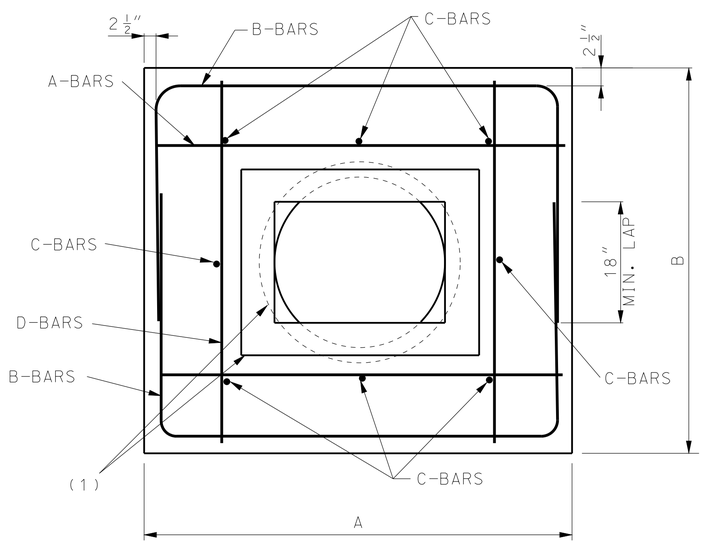

SECTION B-B

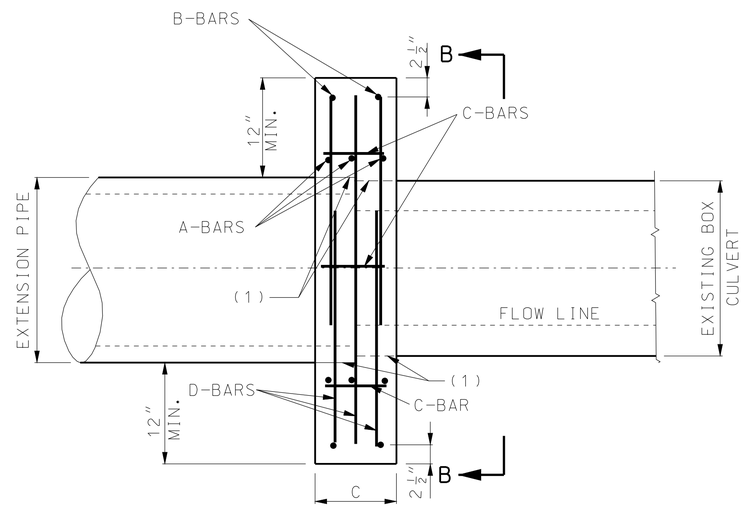

ELEVATION
(FOR BOX CULVERT TO PIPE)

TYPE C COLLAR

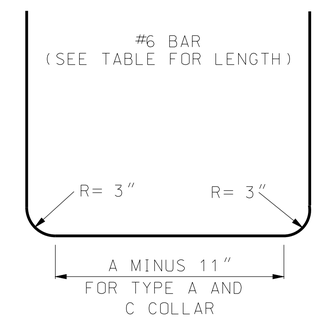

BENDING DIAGRAM FOR B-BARS

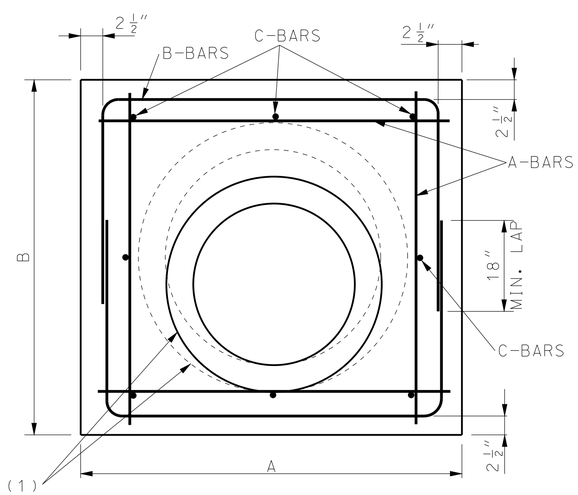

SECTION A-A

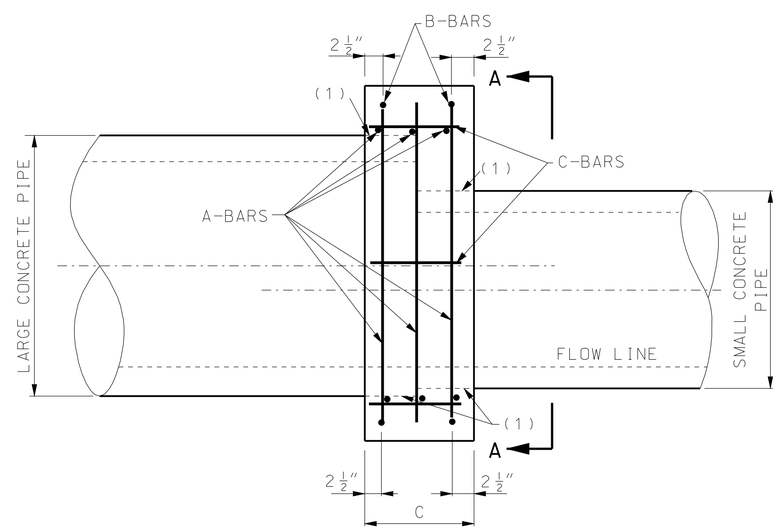

ELEVATION
(FOR CONCRETE PIPE
TO CONCRETE PIPE)

TYPE A COLLAR

(1) ONE LAYER COMMERCIALLY AVAILABLE
55-POUND ROLL ROOFING.

MISSOURI HIGHWAYS AND TRANSPORTATION COMMISSION
105 WEST CAPITOL
JEFFERSON CITY, MO 65102
1-888-ASK-MODOT (1-888-275-6636)

STATE OF MISSOURI
KATHRYN PHILLIPS HARVEY
NUMBER PE-23751
PROFESSIONAL ENGINEER
THIS SHEET HAS BEEN SIGNED, SEALED AND DATED ELECTRONICALLY.

PIPE COLLARS

DATE EFFECTIVE: 10/01/2000
DATE PREPARED: 8/21/2009

604.40F

SHEET NO. 1 OF 2

IF A SEAL IS PRESENT ON THIS SHEET IT HAS BEEN ELECTRONICALLY SEALED AND DATED.