TABLE OF DIMENSIONS

SIZE OF PIPE		DIMENSIONS		LENGTH OF BARS			QUANTITIES	
LARGE (IN.)	SMALL (IN.)	A & B (FT.-IN.)	C (FT.-IN.)	A(#5) 12 REQUIRED (FT.-IN.)	B(#6) 4 REQUIRED (FT.-IN.)	C(#4) 8 REQUIRED (FT.-IN.)	CONCRETE (CU. YD.)	STEEL (LBS.)
12	12	2-8	1-0	2-5	5-10	0-9	0.21	70
15	12 15	3-0	1-0	2-9	6-6	0-9	0.27 0.25	77
18	12 15 18	3-3	1-0	3-0	7-0	0-9	0.33 0.32 0.30	84
21	12 15 18	3-6	1-0	3-3	7-6	0-9	0.36 0.34 0.33	90
24	15 18 24	3-10	1-0	3-6	8-2	0-9	0.44 0.40 0.36	97
30	18 24 30	4-5	1-4	4-2	9-4	1-0	0.71 0.66 0.60	114
36	24 30 36	5-0	1-4	4-9	10-6	1-0	0.88 0.79 0.76	128
42	30 36 42	5-7	1-4	5-4	11-8	1-0	1.05 0.98 0.89	142
48	36 42 48	6-2	1-4	6-0	12-10	1-0	1.22 1.13 1.03	158
54	42 48 54	7-1	1-8	6-9	14-8	1-6	2.02 1.90 1.76	181
60	48 54 60	7-8	1-8	7-5	15-10	1-6	2.27 2.13 1.97	196
66	54 60 66	8-3	2-0	8-0	17-0	1-9	3.04 2.85 2.65	210
72	60 66 72	8-10	2-0	7-7	18-2	1-9	3.36 3.16 2.93	225

TABLE OF DIMENSIONS

BOX SIZE (FT.)	PIPE SIZE (IN.)	DIMENSIONS			LENGTH OF BARS				QUANTITIES	
		A (FT.-IN.)	B (FT.-IN.)	C (FT.-IN.)	A(#5) 6 REQUIRED (FT.-IN.)	B(#6) 4 REQUIRED (FT.-IN.)	C(#4) 8 REQUIRED (FT.-IN.)	D(#5) 6 REQUIRED (FT.-IN.)	CONCRETE (CU.YD.)	STEEL (LBS.)
2 x 1½	24	5-1	4-9	1-0	4-10	10-4	0-9	4-6	0.65	124
2 x 2	30	5-3	5-3	1-4	5-0	11-0	1-0	5-0	0.93	134
3 x 2	36	6-1	5-10	1-4	5-10	12-5	1-0	5-7	1.16	151
3 x 3	42	6-5	6-5	1-4	6-0	13-4	1-0	6-0	1.29	162

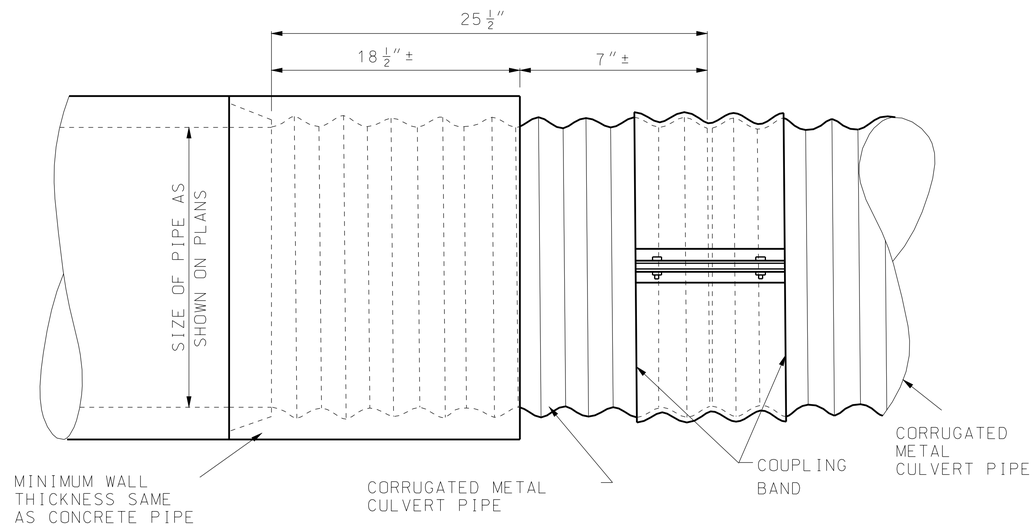

TYPE B COLLAR

(FOR CONCRETE PIPE TO CORRUGATED METAL PIPE)

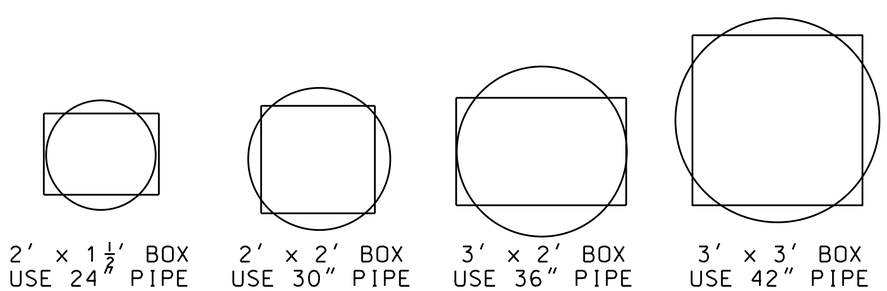

PIPE PLACEMENT

IF A SEAL IS PRESENT ON THIS SHEET IT HAS BEEN ELECTRONICALLY SEALED AND DATED.

MISSOURI HIGHWAYS AND TRANSPORTATION COMMISSION
105 WEST CAPITOL
JEFFERSON CITY, MO 65102
1-888-ASK-MODOT (1-888-275-6636)

STATE OF MISSOURI
KATHRYN PHILLIPS HARVEY
NUMBER PE-23751
PROFESSIONAL ENGINEER
THIS SHEET HAS BEEN SIGNED, SEALED AND DATED ELECTRONICALLY.

PIPE COLLARS

DATE EFFECTIVE: 10/01/2000
DATE PREPARED: 8/21/2009

604.40F

SHEET NO. 2 OF 2