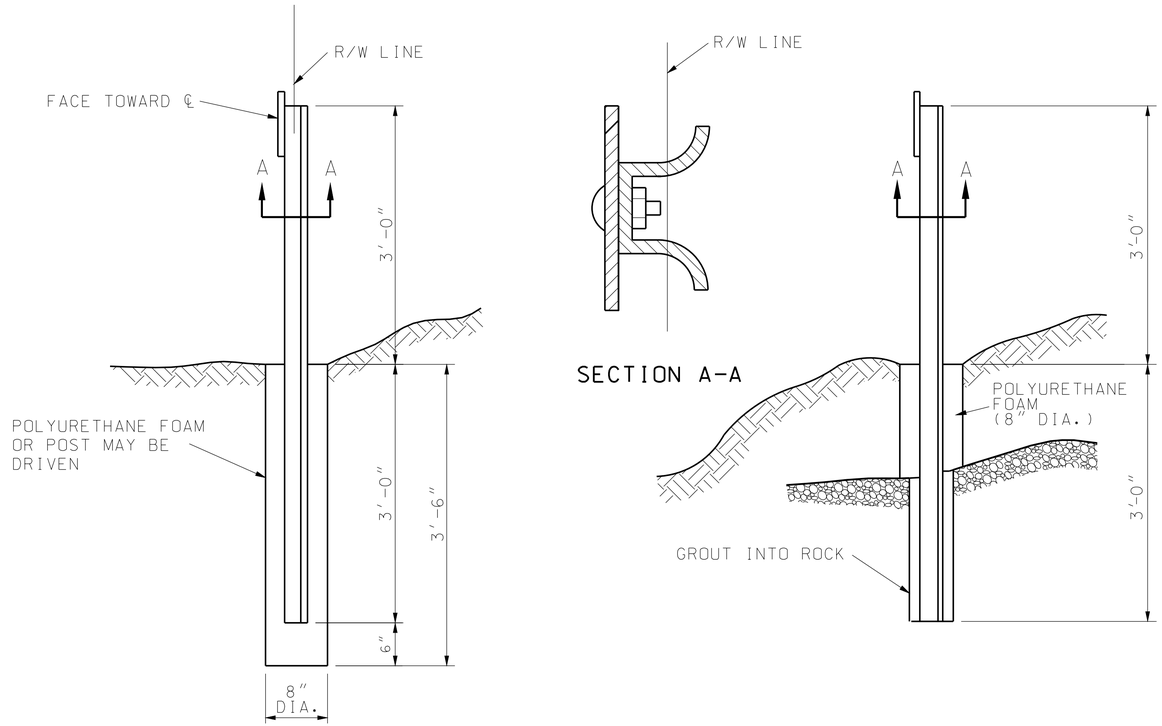

IN EARTH

IN ROCK

STEEL RIGHT-OF-WAY MARKER

LEGEND

EXISTING	NEW	
		STEEL R/W MARKER
		LOCATION SURVEY R/W MARKER
		CONCRETE R/W MARKER
	X	DRAIN MARKER

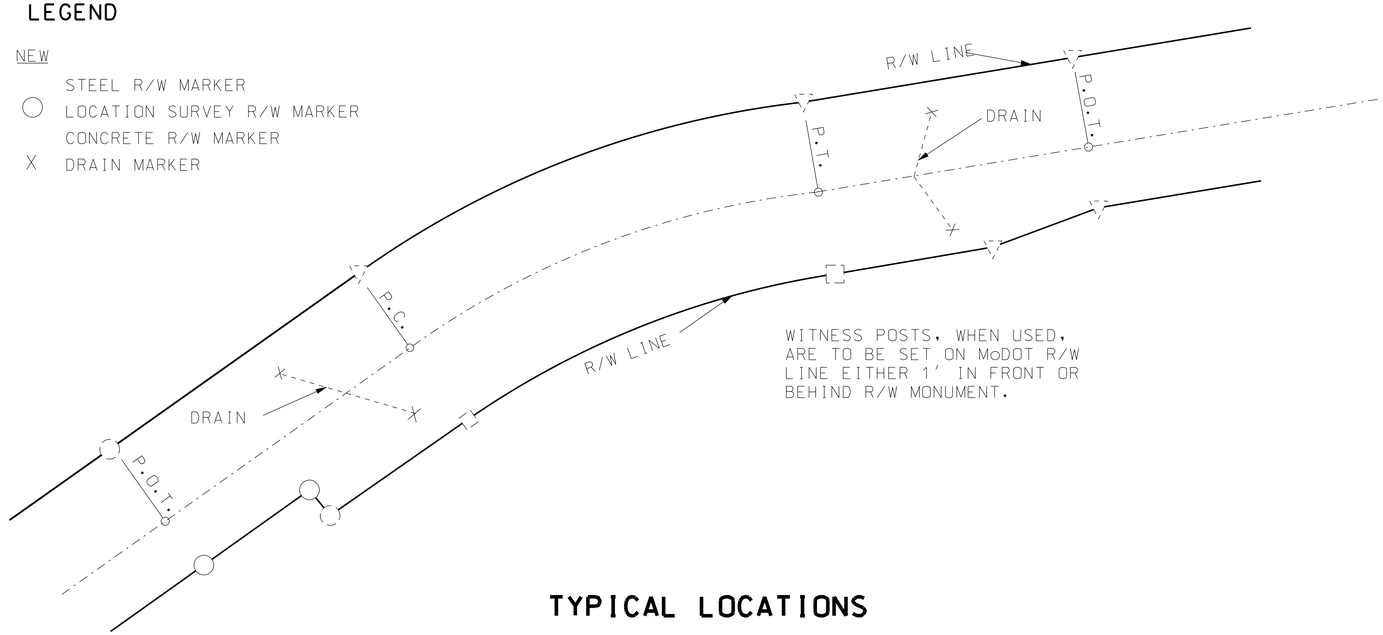

TYPICAL LOCATIONS

MISSOURI HIGHWAYS AND TRANSPORTATION COMMISSION
105 WEST CAPITOL
JEFFERSON CITY, MO 65102
1-888-ASK-MODOT (1-888-275-6636)

STATE OF MISSOURI
KATHRYN PHILLIPS HARVEY
NUMBER PE-23751
PROFESSIONAL ENGINEER
THIS SHEET HAS BEEN SIGNED, SEALED AND DATED ELECTRONICALLY.

RIGHT-OF-WAY AND DRAIN MARKERS

DATE EFFECTIVE: 01/01/2003
DATE PREPARED: 8/21/2009

602.00D

SHEET NO. 2 OF 2

IF A SEAL IS PRESENT ON THIS SHEET IT HAS BEEN ELECTRONICALLY SEALED AND DATED.