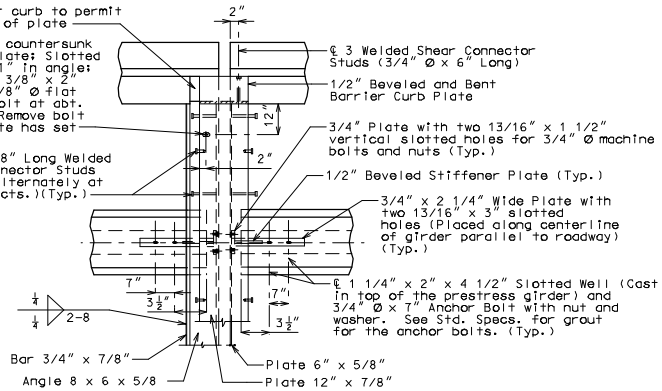

PART PLAN

Note: Concrete vent holes not shown for clarity.

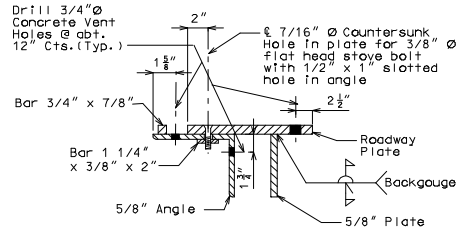

PART SECTION (TYPICAL)

GENERAL NOTES:

Expansion device shall be fabricated in one section, except for stage construction and when the length is over 50 feet. A complete joint penetration groove weld splice shall be required. Welds shall be ground flush to provide a smooth surface. The expansion device shall be fabricated and installed to the crown and grade of the roadway.

Plan dimensions are based on installation at 60°F. The expansion gap and other dimensions shall be increased or decreased " for each 10° fall or rise in temperature at installation.

Material for the expansion device shall be ASTM A709 Grade 36 structural steel. Anchors for the expansion device shall be in accordance with Sec 1037.

Structural steel for the expansion device and curb plate shall be coated with a minimum of two coats of inorganic zinc primer (5 mils minimum) or galvanized in accordance with ASTM A123. Anchors need not be protected from overspray.

Payment for furnishing, coating or galvanizing and installing the structural steel for the expansion device will be considered completely covered by the contract unit price for Expansion Device (Flat Plate) per linear foot.

Concrete shall be forced under and around flat plate, anchors and angles. Proper consolidation shall be achieved by localized internal vibration. Finishing of the concrete shall be achieved by hand finishing within one foot of the expansion device. The vertical and horizontal concrete vent holes shall be offset from each other. Do not alternate holes at the 12" spacing.

Longitudinal reinforcing steel shall be placed so that ends shall not be more than ±1" from vertical plate and the vertical leg of the angle at the expansion device.

Complete joint penetration welds utilized in the fabrication of the expansion device shall be nondestructively tested by an approved method.

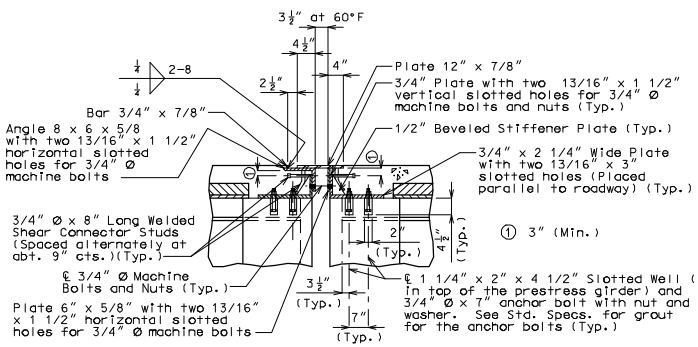

PART SECTION AT INTERMEDIATE BENT

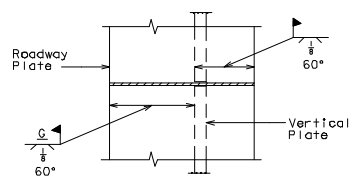

PART PLAN ROADWAY PLATE AND VERTICAL PLATE

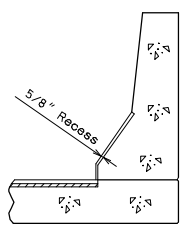

PART SECTION B-B

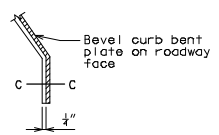

PART ELEVATION AT END OF BEVELED CURB BENT PLATE

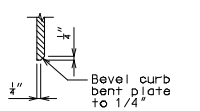

SECTION C-C

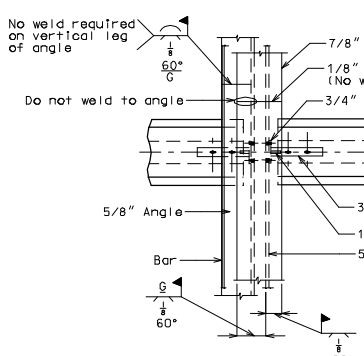

PERMISSIBLE FIELD SPLICE AT INT. BENT

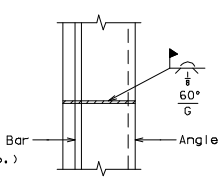

PART PLAN OF ANGLE AND BAR

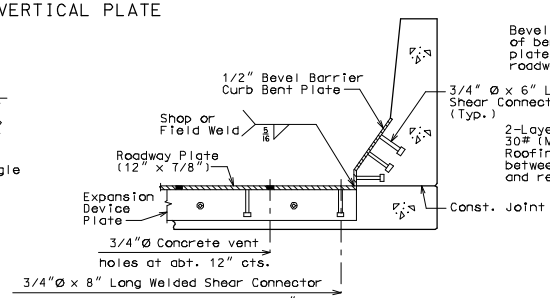

PART SECTION A-A

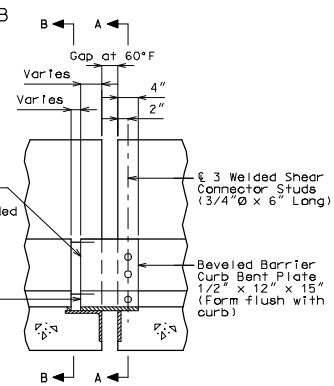

ELEVATION OF BARRIER CURB

DETAILS OF FLAT PLATE EXPANSION DEVICE AT INT. BENT NO.

Detailed
Checked

Note: This drawing is not to scale. Follow dimensions.

Sheet No. of

"THIS MEDIA SHOULD NOT BE CONSIDERED A CERTIFIED DOCUMENT."

DATE PREPARED	
07/28/2008	
ROUTE	STATE
*	MO
DISTRICT	SHEET NO.
BR	*
COUNTY	
*	
JOB NO.	
*	
CONTRACT ID.	
PROJECT NO.	
BRIDGE NO.	
FPE 22	

DATE	DESCRIPTION

MISSOURI HIGHWAYS AND TRANSPORTION COMMISSION

105 WEST CAPITOL
JEFFERSON CITY, MO 65102
1-888-ASK-MODOT (1-888-275-6636)

IF A SEAL IS PRESENT ON THIS SHEET IT HAS BEEN ELECTRONICALLY SEALED AND DATED.