ROUTE	STATE	DISTRICT	SHEET NO.
*	MO	BR	*

JOB NO. *

CONTRACT ID.

PROJECT NO.

COUNTY *

"THIS MEDIA SHOULD NOT BE CONSIDERED A CERTIFIED DOCUMENT."

DATE_____

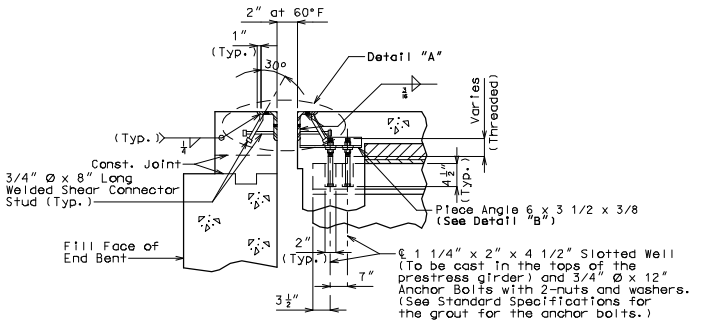

PART SECTION D-D

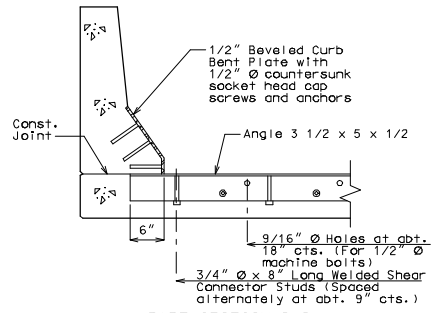

PART SECTION B-B

PART SECTION A-A

GENERAL NOTES:

Expansion joint system shall be fabricated in one section. except for stage construction and when the length is over 50 feet. A complete joint penetration groove welded splice shall be required. Welds shall be ground flush to provide a smooth surface. The expansion joint system shall be fabricated and installed to the crown and grade of the roadway.

Plan dimensions are based on installation at 60°F. The expansion gap and other dimension shall be increased or decreased ___" for each 10° fall or rise in temperature at installation.

Structural steel for the expansion joint system shall be ASTM A709 Grade 36. Anchors for the expansion joint system shall be in accordance with Sec 1037. Silicone Expansion Joint Sealant Systems shall be in accordance with Sec 717.

Structural steel for the expansion joint system and curb plate shall be coated with a minimum of two coats of inorganic zinc primer (5 mils minimum) or galvanized in accordance with ASTM A123. Anchors need not be protected from overspray.

Concrete shall be forced under armor angle and around anchors. Proper consolidation of the concrete shall be achieved by localized internal vibration.

Longitudinal reinforcing steel shall be placed so that ends shall not be more than ±1" from vertical leg of angle at the expansion joint system.

Curb plate anchors shall be a drilled cone expansion or a cast-in-place wing type threaded insert. The minimum ultimate pullout capacity for these anchors shall be 2700 lbs in f'c = 4000 psi concrete. Lead anchors will not be permitted. Holes in the barrier curb for anchors shall not be drilled until the concrete is at least 7 days old.

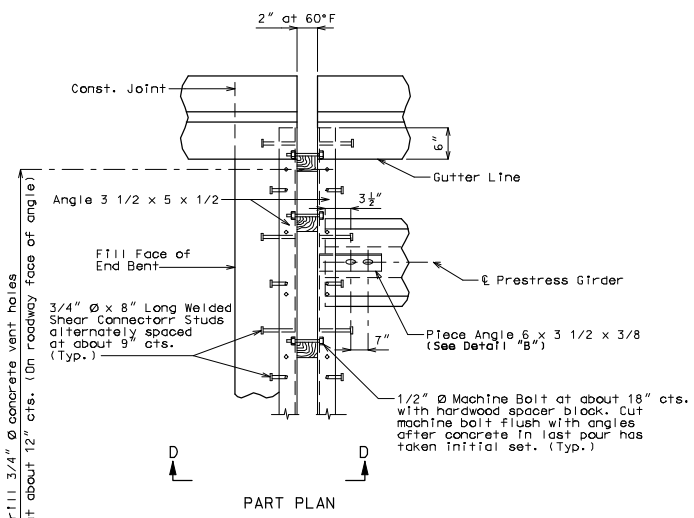

PART PLAN

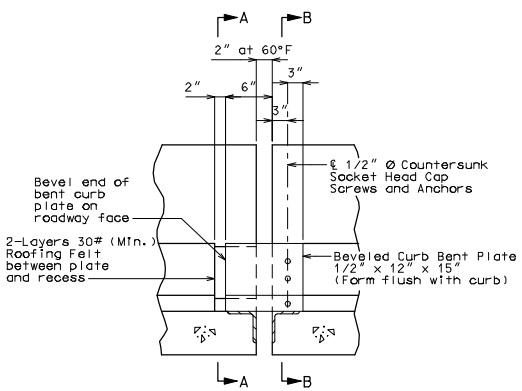

PART ELEVATION OF BARRIER CURB

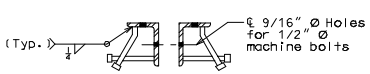

DETAIL "A"

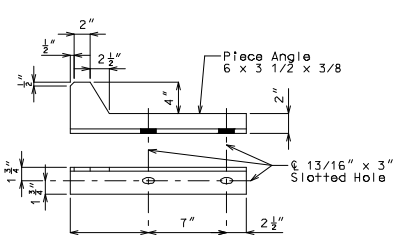

DETAIL "B"

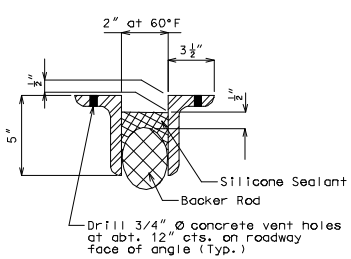

Minimum thickness of angle shall be 1/2".

PART CROSS SECTION THRU EXPANSION JOINT

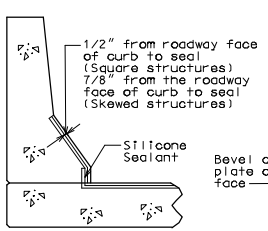

PART SECTION THRU SAFETY BARRIER CURB SHOWING SILICONE EXPANSION JOINT SEALANT

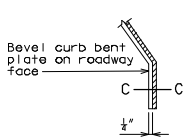

PART ELEVATION AT END OF BEVELED CURB BENT PLATE

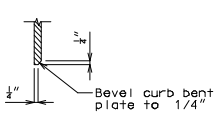

SECTION C-C

DETAILS OF SILICONE EXPANSION JOINT SEAL AT END BENT NO.

Detailed
Checked

Note: This drawing is not to scale. Follow dimensions.

Sheet No. of

SEJS14

IF A SEAL IS PRESENT ON THIS SHEET IT HAS BEEN ELECTRONICALLY SEALED AND DATED.