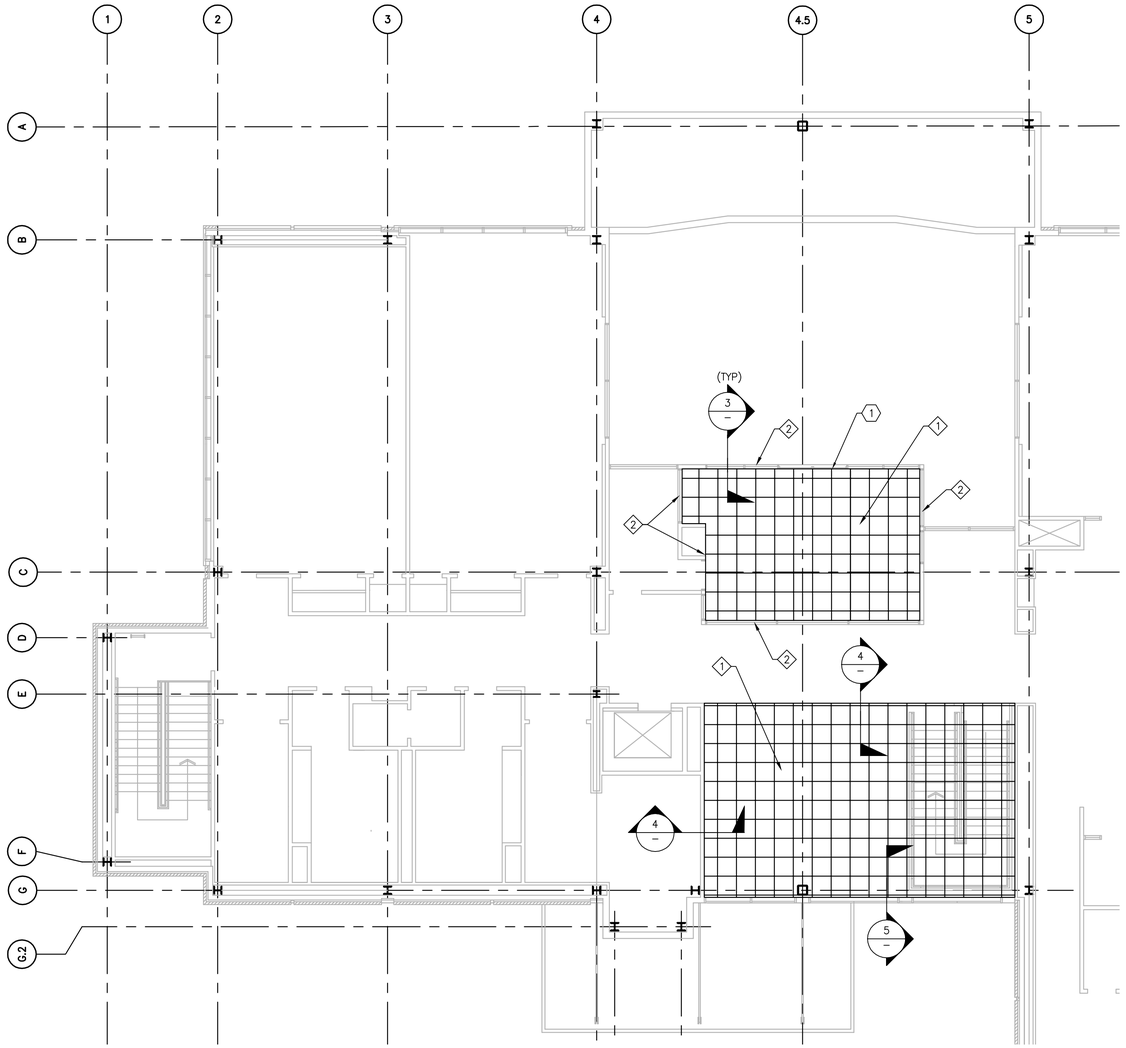

FLOOR PLAN
SCALE: 1/8" = 1'-0"

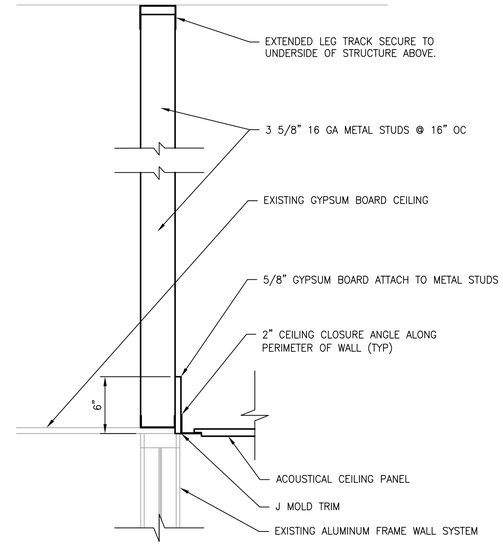

WALL DETAIL 3
SCALE: 1 1/2" = 1'-0"

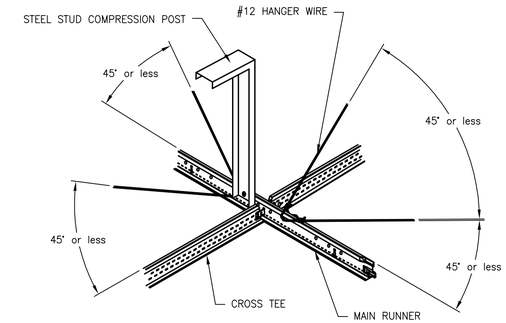

CEILING GRID SEISMIC BRACING DETAIL 1
SCALE: 3" = 1'-0"

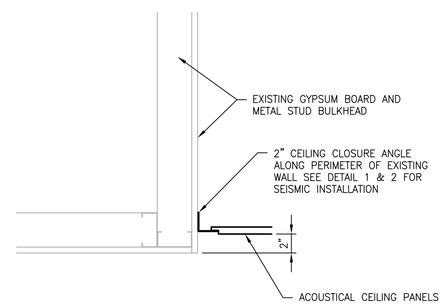

WALL DETAIL 4
SCALE: 1 1/2" = 1'-0"

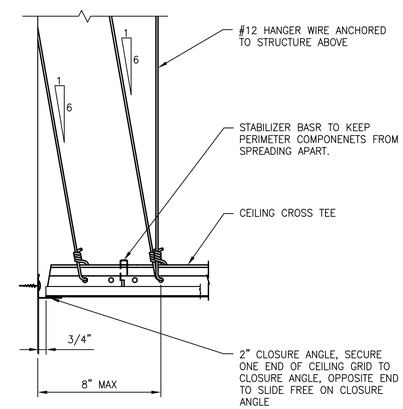

SEISMIC CEILING CONNECTION AT WALL 2
SCALE: 3" = 1'-0"

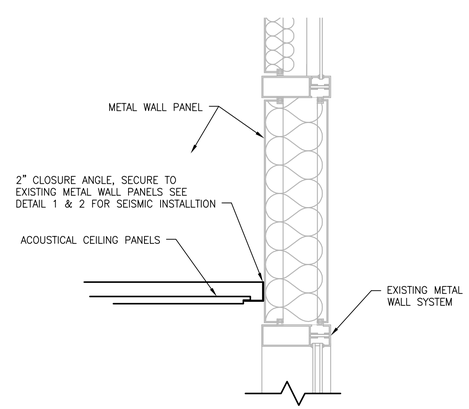

WALL DETAIL 5
SCALE: 1 1/2" = 1'-0"

GENERAL NOTES:

1. REFER TO ELECTRICAL AND MECHANICAL DRAWINGS FOR DEMOLITION OF ELECTRICAL AND MECHANICAL SYSTEMS AND COMPONENTS.
2. REFER TO ELECTRICAL AND MECHANICAL DRAWINGS FOR NEW ELECTRICAL AND MECHANICAL SYSTEMS AND COMPONENTS
3. REMOVAL AND RELOCATION OF FURNITURE AND STORAGE SYSTEMS WILL BE THE RESPONSIBILTY OF MoDOT. CONTRACTOR TO COORDINATE WITH MoDOT FOR REMOVAL OF FURNITURE WHEN REQUIRED.
4. PROVIDE PROTECTION OF EXISTING AND NEW CONSTRUCTION, REPAIR DAMAGED FINISHES TO MATCH ADJACENT AREAS. REPAIR OF SURFACE INCLUDES REPLACING DAMAGED PARTS, REFINSHING DAMAGED SURFACES AND/OR TOUCHING UP WITH MATCHING MATERIALS.
5. PAINTING TO BE COMPLETED BY MoDOT

DEMOLITION NOTES:

1. REMOVE EXISTING SUSPENDED GYPSUM BOARD CEILING, REFER TO ELECTRICAL AND MECHANICAL DRAWINGS FOR DEMOLITION OF ELECTRICAL AND MECHANICAL COMPONENTS

CONSTRUCTION NOTES:

1. INSTALL 24X24X3/4 (SLB) USG 98223 HALCYON CLIMAPLUS ACOUSTICAL CEILING PANELS OR APPROVED EQUAL; NRC# 0.95; LR .88, ON A DONN BRAND "DXL" SUSPENSION SYSTEM OR APPROVED EQUAL; REFER TO DETAIL 1 & 2 ON THIS SHEET FOR SEISMIC INSTALLATION DETAILS
2. INSTALL 16 GA STEEL STUDS @ 16" OC FROM TOP OF EXISTING WALL TO UNDERSIDE OF STRUCTURE ABOVE INSTALL DIAGONAL BRACING 2'-0" MIN @ 4'-0" OC EACH DIRECTION

CEILING SEISMIC GENERAL NOTES

1. HEAVY DUTY T-BAR GRID SYSTEM TO BE USED
2. PROVIDE NO. 12 GAUGE VERTICAL SUPPRT WIRED ON THE MAIN AND CROSS RUNNERS A MAXIMUM DISTANCE OF 8" FROM WALL, AND 4'-0" OC ALONG MAIN RUNNER.
3. LIGHT FIXTURE TO BE ATTACHED TO THE CEILING GRID WITH ATTACHMENT CAPABLE OF SUPPORTING 100% OF THE WEIGHT OF THE LIGHT FIXTURE. LIGHT FIXTURES UP TO 56 LBS REQUIRE TWO VERTICAL SUPPROT WIRES, WIRES MAY BE SLACK IN THE NORMAL INSTALLATION POSITION. LIGHT FIXTURE WEIGHING MORE THAN 56 LBS SHALL REQUIRE INDEPENDENT SUPPORT FROM SHELL OF STRUCTURE ABOVE CEILING.
4. MECHANICAL AIR TERMINALS WEGHING LESS THAN 20 LBS SHALL BE SECURED TO THE CEILING GRID. AIR TERMINALS WEIGHING 20 LBS, BUT NOT MORE THAN 56 LBS SHALL BE ATTACHED TO THE BUILING SHELL WITH TWO NO. 12 GAUGE WIRES ALONG WITH BE SECURED TO THE CEILING GRID. THE WIRES MAY BE SLACK IN A NORMAL INSTALLATION POSITION. AIR TERMINALS WEIGHING MORE THAN 56 LBS SHALL BE INDEPENDENTLY SUPPORTED FROM THE BUILDING SHELL.
5. SPRINKLER HEADS AND OTHER PENETRATIONS OF THE SUSPENDED CEILING SHALL HAVE AN OVERSIZED RING, SLEEVE OR ADAPTOR THROUGH THE CEILING TILE TO ALLOW FREE MOVEMENT OF AT LEAST 1" IN ALL HORIZONTAL DIRECTIONS.

REV.	DATE	DESCRIPTION	APPROVED
0	4/28/08	CLIENT REVIEW	GEB

CDG ENGINEERS
CDG Engineers Architects Planners Inc.
One Campbell Plaza
St. Louis, Missouri 63139
www.cdgengineers.com
T. 314 781.7770
F. 314 781.9075

DRAWN BY DLS
CHECKED BY GEB
SCALE AS SHOWN
DATE 04/28/08

SECOND FLOOR REFLECTED CEILING PLAN
MISSOURI DEPARTMENT OF TRANSPORTATION
DISTRIC 6 TRAFFIC CONTROL CENTER
1570 WOODLAKE DR, CHESTERFIELD, MO

PROJECT NO. 08017
DRAWING NO. A-201

PROJECT SPECIFICATIONS

1. THIS PROJECT IS PRIME MECHANICAL AND ALL WORK RELATED TO THIS PROJECT SHALL BE COORDINATED THROUGH THE MECHANICAL CONTRACTOR.
2. THIS PROJECT IS TAX EXEMPT.
3. TEMPERATURE CONTROLS: ALL WORK RELATED TO TEMPERATURE CONTROLS SHALL BE PERFORMED BY:
   EAGLE
   15 WORTHINGTON DRIVE
   MARYLAND HEIGHTS, MO 63043
   PH: 314.576.2990
   FAX: 314.576.6113
   CONTACT: MIKE HIRONS
4. ALL ELECTRICAL WORK FOR THIS PROJECT SHALL BE PERFORMED BY RIENHOLD ELECTRIC, THE MODOT ELECTRICAL SERVICE CONTRACTOR.
5. DEMOLITION AND INSTALLATION OF RTU-1 AND RTU-2 SHALL BE PERFORMED ON PREMIUM TIME.
6. MODOT IS RESPONSIBLE FOR MOVING ALL FURNITURE TO ACCESS ALL WORK AREAS.

MECHANICAL SPECIFICATIONS

EQUIPMENT INSTALLATION - COMMON REQUIREMENTS

1. INSTALL EQUIPMENT LEVEL AND PLUMB, PARALLEL AND PERPENDICULAR TO BUILDING SYSTEMS.
2. INSTALL MECHANICAL EQUIPMENT TO FACILITATE SERVICE, MAINTENANCE, AND REPAIR OR REPLACEMENT COMPONENTS. CONNECT EQUIPMENT FOR EASE OF DISCONNECTING, WITH MINIMUM INTERFERENCE TO OTHER INSTALLATIONS. EXTEND GREASE FITTINGS TO ACCESSIBLE LOCATIONS.

MOTORS

1. THIS CONTRACTOR SHALL FURNISH ALL STARTERS REQUIRED FOR THE HVAC SYSTEMS. STARTERS WILL BE INSTALLED BY THE ELECTRICAL CONTRACTOR.
2. MOTOR EFFICIENCY: CONFORM TO IEEE-112 AND NEMA MG1, TABLE 12-10.

VIBRATION ISOLATION

1. ALL MOTOR DRIVEN EQUIPMENT SHALL BE INSTALLED WITH VIBRATION ISOLATORS. UNLESS NOTED OTHERWISE, SUSPENDED EQUIPMENT SHALL HAVE SPRING ISOLATOR HANGERS AND BASE MOUNTED EQUIPMENT SHALL HAVE DOUBLE DEFLECTION NEOPRENE ISOLATORS.

METAL DUCTS

1. METAL AND GAUGE: GALVANIZED IRON TO BE USED THROUGHOUT, FABRICATED AND INSTALLED SO THAT NO VIBRATION OR NOISE RESULTS. FABRICATE FROM THE BEST GRADE OF MILD STEEL SHEETS OF THE U.S. STANDARD GAUGE JOINT AND SEAL RECOMMENDED IN THE LATEST EDITION OF THE SMACNA MANUAL.
2. DUCTWORK SHALL BE OF 2-INCH PRESSURE CLASS FOR LOW PRESSURE DUCT AND CAULKED AT JOINTS AND CONNECTIONS WITH "IRON GRIP".
3. DUCT SIZES SHOWN ARE CLEAR INSIDE DIMENSIONS.
4. FLEXIBLE DUCT SHALL NOT EXCEED 6'-0" IN LENGTH
5. ALL SUPPLY AIR DUCT SHALL BE INSULATED WITH 1-1/2" THICK FIBERGLASS INSULATION WITH A CONTINUOUS VAPOR BARRIER.

HANGERS

1. HANGER MATERIALS FOR DUCTS SHALL BE GALVANIZED, SHEET STEEL OR ROUND, THREADED STEEL ROD. STRAPS AND ROD SIZES SHALL COMPLY WITH SMACNA'S "HVAC DUCT CONSTRUCTION STANDARDS" FOR SHEET STEEL WIDTH AND THICKNESS FOR STEEL ROD DIAMETERS.
2. COORDINATE MOTOR SUPPORT WITH REQUIREMENTS FOR DRIVEN LOAD: ACCESS FOR MAINTENANCE AND MOTOR REPLACEMENT: INSTALLATION OF ACCESSORIES, BELTS, BELT GUARDS: AND ADJUSTMENT OF SLIDING RAILS FOR BELT TENSIONING.
3. HANGER INSTALLATION SHALL BE IN ACCORDANCE WITH SMACNA SEISMIC RESTRAINT MANUAL.

ROOFTOP UNIT CONDENSATE DRAIN

1. ROOFTOP UNIT CONDENSATE DRAIN PIPING SHALL BE PVC. MINIMUM SLOPE OF PIPE SHALL BE 1-INCH IN 8 FEET. PROVIDE A CONDENSATE DRAIN TRAP WITH A MINIMUM OF 2-INCH WATER SEAL.

TEST AND BALANCE

1. CONTRACTOR SHALL REBALANCE AIR AND HYDRONIC SYSTEMS IN THEIR ENTIRETY.
2. TEST AND BALANCE SERVICES SHALL BE PERFORMED BY AN APPROVED TEST AND BALANCING FIRM WHO HAS BEEN IN THE BUSINESS FOR AT LEAST 5 YEARS AND IS CERTIFIED BY AABC, NEBB OR TABB.
3. TAB CONTRACTOR IS TO COORDINATE WITH THE HVAC CONTRACTOR TO ENSURE THAT THE SYSTEM IS COMPLETE AND OPERATIONAL AND THAT NEW FILTERS ARE INSTALLED PRIOR TO PERFORMING TEST AND BALANCE SERVICES.
4. ADJUST DAMPERS, FANS, AND SHEAVES UNTIL EVEN DISTRIBUTION AND REQUIRED CFM OF AIR IS OBTAINED THROUGHOUT.
5. SUBMIT (6) TEST AND BALANCE REPORTS TO THE OWNER UPON COMPLETION OF WORK. TEST AND BALANCE REPORT IS TO INCLUDE ALL PERTINENT OPERATING DATA: CFM AND RPM AT EACH OUTLET, FAN RPM, FAN TSP, MOTOR CURRENT, ETC. INCLUDE CERTIFICATION SHEET IN FRONT OF REPORT SIGNED AND SEALED BY THE CERTIFIED TEST AND BALANCE CONTRACTOR. INCLUDE A LIST OF THE INSTRUMENTS USED FOR PROCEDURES ALONG WITH PROOF OF CALIBRATION.
6. COMPENSATING FOR DIVERSITY IN VAV SYSTEMS: WHEN THE TOTAL AIRFLOW OF ALL TERMINAL UNITS IS MORE THAN THE INDICATED AIRFLOW OF THE FAN, PLACE A SELECTED NUMBER OF TERMINAL UNITS AT A MAXIMUM SET-POINT AIRFLOW CONDITION UNTIL THE TOTAL AIRFLOW OF THE TERMINAL UNITS EQUALS THE INDICATED AIRFLOW OF THE FAN. SELECT THE REDUCED AIRFLOW TERMINAL UNITS SO THEY ARE DISTRIBUTED EVENLY AMONG THE BRANCH DUCTS.

GENERAL SPECIFICATIONS

1. THE GENERAL CONDITIONS, SUPPLEMENTARY CONDITIONS AND GENERAL REQUIREMENTS APPLY TO THIS CONTRACT. CONTRACTOR SHALL REVIEW AND ADHERE TO ALL REQUIREMENTS OF THESE DOCUMENTS.
2. MANUFACTURERS' NAMES ARE SCHEDULED FOR EQUIPMENT AS A BASIS OF DESIGN, IT IS NOT THE INTENT TO LIMIT THE COMPETITION. EQUIVALENT EQUIPMENT OF OTHER MANUFACTURERS WILL BE CONSIDERED FOR ACCEPTANCE AND INSTALLATION.
3. ALL MECHANICAL WORK SHALL BE PERFORMED IN ACCORDANCE WITH THE LATEST EDITION OF APPLICABLE CODES AND STANDARDS AS REQUIRED BY THE STATE OF MISSOURI AND LOCAL JURISDICTIONS.
4. BEFORE FABRICATING/RUNNING ANY DUCTWORK OR PIPING, THIS CONTRACTOR SHALL ASSURE HIMSELF THAT THEY CAN BE RUN AS CONTEMPLATED IN COOPERATION WITH CONTRACTORS OF OTHER DIVISIONS OF THE WORK AND THE PHYSICAL CONSTRAINTS OF THE STRUCTURAL AND ARCHITECTURAL WORK.
5. THIS CONTRACTOR SHALL FURNISH AND INSTALL ALL LABOR, MATERIALS, TOOLS, SUPERVISION AND EQUIPMENT REQUIRED TO COMPLETE THE MECHANICAL WORK AS SHOWN ON THE MECHANICAL DRAWINGS. PROVIDE ALL MINOR INCIDENTAL ITEMS SUCH AS OFFSETS, FITTINGS, AND ACCESSORIES REQUIRED AS PART OF THE WORK EVEN THOUGH NOT INDICATED. MECHANICAL DRAWINGS ARE SCHEMATIC AND NOT TO BE SCALED. REFER TO ARCHITECTURAL OR CERTIFIED DRAWINGS FOR DIMENSIONS.
6. THIS CONTRACTOR SHALL MAINTAIN AT THE SITE (1) COPY OF ALL DRAWINGS IN GOOD ORDER AND MARKED TO RECORD ALL CHANGES MADE DURING CONSTRUCTION.
7. CONTRACTOR SHALL BE RESPONSIBLE FOR PREPARING SHOP DRAWINGS AND PRODUCT SUBMITTALS FOR COMPLIANCE WITH CONTRACT DOCUMENTS. SUBMIT (4) COPIES TO ARCHITECT / ENGINEER FOR APPROVAL PRIOR TO ORDERING.
8. UPON COMPLETION OF WORK PROVIDE (2) COPIES OF OPERATING AND MAINTENANCE MANUAL TO OWNER FOR ALL SYSTEMS AND EQUIPMENT. INCLUDE ALL FAN LUBRICATION SCHEDULE, FILTER TYPES AND SIZES ALONG WITH RECOMMENDED FILTER CHANGE SCHEDULE AND STARTING AND STOPPING PROCEDURES. PROVIDE DETAILED INFORMATION ON PROGRAMMABLE THERMOSTAT TO INCLUDE HOW TO PROGRAM DESIRED SETBACK SCHEDULES. LIST HVAC AND PLUMBING CONTRACTOR CONTACTS AND PHONE NUMBERS.
9. PROVIDE PROPER CURBS, SUPPORTS, AND ANCHORS FOR ALL MECHANICAL WORK. CHAINS, TAPE, AND/OR WIRE WILL NOT BE ALLOWED.
10. PROVIDE SLEEVES AND COLLARS FOR ALL DUCTWORK THROUGH WALLS, FLOORS, AND CEILINGS. WHERE REQUIRED TO CONNECT TO EQUIPMENT IN FINISHED AREAS.
11. THIS CONTRACTOR SHALL NOT CUT THROUGH STRUCTURAL MEMBERS WITHOUT WRITTEN CONSENT FROM THE STRUCTURAL ENGINEER.
12. THIS CONTRACTOR SHALL SECURE AND MAINTAIN, FOR THE LIFE OF THIS CONTRACT ALL INSURANCE POLICIES OR COVERAGE AS REQUIRED BY LAW.
13. THIS CONTRACTOR SHALL COORDINATE HIS WORK WITH THE WORK OF OTHER TRADES TO INSURE THAT ALL WORK CAN BE INSTALLED IN AN EXPEDIENT AND WORKMANLIKE MANNER. THIS CONTRACTOR WILL BE EXPECTED TO COOPERATE WITH OTHER CONTRACTORS IN THE PLACEMENT OF WORK TO AVOID CONFLICTS AND TO MAINTAIN JOB PROGRESS. THE ARCHITECT SHALL BE ADVISED IN THE EVENT THAT CONFLICTS ARISE.
14. THIS CONTRACTOR SHALL OBTAIN PERMITS AND PAY FEES ASSOCIATED WITH HIS PORTION OF THE MECHANICAL SYSTEM INSTALLATION. THIS CONTRACTOR SHALL BE RESPONSIBLE FOR ARRANGING INSPECTIONS WITH THE APPROPRIATE BUILDING OFFICIALS.
15. ALL MATERIALS, EQUIPMENT AND DEVICES FURNISHED BY THIS CONTRACTOR SHALL BE GUARANTEED TO BE FREE FROM MECHANICAL DEFECTS OR FAULTY WORKMANSHIP FOR A PERIOD OF ONE YEAR FROM DATE OF ACCEPTANCE BY THE OWNER.
16. THIS CONTRACTOR SHALL CONFIRM VOLTAGE AND AMPACITY WITH ELECTRICAL CONTRACTOR PRIOR TO ORDERING EQUIPMENT. ALL CONTROL AND INTERLOCK WIRING FOR MECHANICAL EQUIPMENT SHALL BE BY DIVISION 15 CONTRACTOR. CONTROL SETPOINTS AND HEATING/COOLING EQUIPMENT SHALL BE WIRED TO AUTOMATICALLY RESTART AFTER POWER FAILURE. ALL WIRE SHALL BE INSTALLED IN CONDUIT PER NEC LATEST EDITION.

SEISMIC SPECIFICATIONS

1 DELEGATED-DESIGN SUBMITTAL: FOR VIBRATION ISOLATION AND SEISMIC-RESTRAINT DETAILS INDICATED TO COMPLY WITH PERFORMANCE REQUIREMENTS AND DESIGN CRITERIA, INCLUDING ANALYSIS DATA SIGNED AND SEALED BY THE QUALIFIED PROFESSIONAL ENGINEER RESPONSIBLE FOR THEIR PREPARATION.

A. DESIGN CALCULATIONS: CALCULATE STATIC AND DYNAMIC LOADING DUE TO EQUIPMENT WEIGHT AND OPERATION, SEISMIC AND WIND FORCES REQUIRED TO SELECT VIBRATION ISOLATORS, SEISMIC AND WIND RESTRAINTS, AND FOR DESIGNING VIBRATION ISOLATION BASES.

a. COORDINATE DESIGN CALCULATIONS WITH WIND LOAD CALCULATIONS REQUIRED FOR EQUIPMENT MOUNTED OUTDOORS. COMPLY WITH REQUIREMENTS IN OTHER DIVISION SECTIONS FOR EQUIPMENT MOUNTED OUTDOORS.

B. RISER SUPPORTS: INCLUDE RISER DIAGRAMS AND CALCULATIONS SHOWING ANTICIPATED EXPANSION AND CONTRACTION AT EACH SUPPORT POINT, INITIAL AND FINAL LOADS ON BUILDING STRUCTURE, SPRING DEFLECTION CHANGES, AND SEISMIC LOADS. INCLUDE CERTIFICATION THAT RISER SYSTEM HAS BEEN EXAMINED FOR EXCESSIVE STRESS AND THAT NONE WILL EXIST.

C. VIBRATION ISOLATION BASE DETAILS: DETAIL OVERALL DIMENSIONS, INCLUDING ANCHORAGES AND ATTACHMENTS TO STRUCTURE AND TO SUPPORTED EQUIPMENT. INCLUDE AUXILIARY MOTOR SLIDES AND RAILS, BASE WEIGHTS, EQUIPMENT STATIC LOADS, POWER TRANSMISSION, COMPONENT MISALIGNMENT, AND CANTILEVER LOADS.

D. SEISMIC AND WIND RESTRAINT DETAILS:

b. DESIGN ANALYSIS: TO SUPPORT SELECTION AND ARRANGEMENT OF SEISMIC AND WIND RESTRAINTS. INCLUDE CALCULATIONS OF COMBINED TENSILE AND SHEAR LOADS.

c. DETAILS: INDICATE FABRICATION AND ARRANGEMENT. DETAIL ATTACHMENTS OF RESTRAINTS TO THE RESTRAINED ITEMS AND TO THE STRUCTURE. SHOW ATTACHMENT LOCATIONS, METHODS, AND SPACINGS. IDENTIFY COMPONENTS, LIST THEIR STRENGTHS, AND INDICATE DIRECTIONS AND VALUES OF FORCES TRANSMITTED TO THE STRUCTURE DURING SEISMIC EVENTS. INDICATE ASSOCIATION WITH VIBRATION ISOLATION DEVICES.

d. COORDINATE SEISMIC-RESTRAINT AND VIBRATION ISOLATION DETAILS WITH WIND-RESTRAINT DETAILS REQUIRED FOR EQUIPMENT MOUNTED OUTDOORS. COMPLY WITH REQUIREMENTS IN OTHER DIVISION"22 SECTIONS FOR EQUIPMENT MOUNTED OUTDOORS.

e. PREAPPROVAL AND EVALUATION DOCUMENTATION: BY AN EVALUATION SERVICE MEMBER OF ICC-ES OR OSHPD OR AN AGENCY ACCEPTABLE TO AUTHORITIES HAVING JURISDICTION, SHOWING MAXIMUM RATINGS OF RESTRAINT ITEMS AND THE BASIS FOR APPROVAL (TESTS OR CALCULATIONS).

McGRATH INCORPORATED | ENGINEERING / CONSTRUCTION MANAGEMENT | DENVER / ST. LOUIS
A Rodenberg, Bonsall, Scott & Ainsworth Company
5353 WEST DARTMOUTH AVENUE
SUITE 506
DENVER, COLORADO 80227
PH: (303) 969-0220
FAX: (303) 985-5565
1881 CRAIG ROAD
ST. LOUIS, MO 63146
PH: (314) 576-7640
FAX: (314) 576-6440

REV.	DATE	DESCRIPTION	APPROVED

CDG ENGINEERS
CDG Engineers Architects Planners Inc.
One Campbell Plaza
St. Louis, Missouri 63139
www.cdgengineers.com
T. 314 781.7770
F. 314 781.9075

MoDOT

DRAWN BY KLA
CHECKED BY KLA
SCALE AS SHOWN
DATE 05/19/08

HVAC SPECIFICATIONS
MISSOURI DEPARTMENT OF TRANSPORTATION
DISTRICT 6 TRAFFIC CONTROL CENTER
14301 SO. OUTER FORTY DR, CHESTERFIELD, MO

PROJECT NO. 08017

DRAWING NO. M-000

SEISMIC CODE BLOCK

LISTING OF EQUIPMENT AND SYSTEM COMPONENTS	ANCHORAGE TO FLOORS, ROOFS, ETC.		SWAY BRACING		LOCATION OF PROFESSIONALLY SEALED ANCHORAGE AND SWAY BRACING DETAILS			COMMENTS
					ON CONSTRUCTION DOCUMENTS	SUBSEQUENT SUBMITTAL		
	NOT PROVIDED	PROVIDED	NOT PROVIDED	PROVIDED	DRAWING NO. OR SPEC. SECTION	SHOP DRAWINGS	SEPARATE PERMIT & PLANS	
FIRE PROTECTION, DETECTION, & ALARM EQUIPMENT AND SYSTEM COMPONENTS. Ip=1.5 FIRE SPRINKLER PIPING		X		X				1
EMERGENCY OR STANDBY EQUIPMENT AND SYSTEM COMPONENTS	N/A	N/A	N/A	N/A	N/A	N/A	N/A	
OTHER EQUIPMENT AND SYSTEM COMPONENTS NEEDED FOR CONTINUED OPERATION OF SEISMIC USE GROUP II FACILITIES OR WHOSE FAILURE COULD IMPAIR THEIR CONTINUED OPERATION.	N/A	N/A	N/A	N/A	N/A	N/A	N/A	
OTHER GENERAL EQUIPMENT AND SYSTEM COMPONENTS Ip=1.0 ROOF TOP: RTU-1 & RTU-2 > 400 LBS		X				X		1
GRADE MOUNTED: N/A								
SUSPENDED FROM STRUCTURE: N/A		X				X		1 2 3
WALL MOUNTED: N/A								
FIRE DAMPERS, LOUVERS	N/A		N/A					
DUCTWORK	X		X					4
PIPING <= 3"	N/A	N/A	N/A	N/A	N/A	N/A	N/A	
AIR DEVICES	X		X					5

NOTES:
1. CONTRACTOR SHALL PROVIDE SHOP DRAWINGS TO THE ENGINEER OF RECORD FOR REVIEW AND APPROVAL PRIOR TO SUBMITTAL TO THE PLAN REVIEWER.
2. TABLE 500, EXCEPTION 4 - 3 FT. MINIMUM FLEX CONNECTION BETWEEN COMPONENTS SHALL BE PROVIDED.
3. TYPICAL SEISMIC ANCHORAGE (OR SWAY BRACING) IS PROVIDED ON THE DRAWINGS FOR REFERENCE ONLY. SHOP DRAWINGS ARE REQUIRED.
4. TABLE 600 EXCEPTION B FOR DUCT A CROSS SECTIONAL AREA LESS THAN 6 SQUARE FEET.
5. COMPONENTS SHALL BE POSITIVELY ATTACHED WITH MECHANICAL FASTENERS.

NEW & EXISTING MECHANICAL LEGEND & ABBREVIATIONS

SYMBOLS	DESCRIPTION	SYMBOLS	DESCRIPTION
	LIGHT TEXT/LINEWEIGHT INDICATES EXISTING DARK TEXT/LINEWEIGHT INDICATES NEW		HATCHED ITEMS TO BE REMOVED
	NEW SUPPLY DUCT TURNING UP		EXISTING SUPPLY DUCT TURNING UP
	NEW SUPPLY DUCT TURNING DOWN		EXISTING SUPPLY DUCT TURNING DOWN
	NEW RETURN / EXHAUST DUCT TURNING UP		EXISTING RETURN / EXHAUST DUCT TURNING UP
	NEW RETURN / EXHAUST DUCT TURNING DOWN		EXISTING RETURN / EXHAUST DUCT TURNING DOWN
	NEW MANUAL VOLUME DAMPER		EXISTING MANUAL VOLUME DAMPER
	NEW CONICAL SPIN-IN FITTING WITH MANUAL VOLUME DAMPER		EXISTING CONICAL SPIN-IN FITTING WITH MANUAL VOLUME DAMPER
	NEW 90° ELBOW WITH TURNING VANES		EXISTING 90° ELBOW WITH TURNING VANES
	NEW FLEX DUCT		EXISTING FLEX DUCT
	NEW SUPPLY AIR DIFFUSER		EXISTING SUPPLY AIR DIFFUSER
	NEW RETURN AIR GRILLE		EXISTING RETURN AIR GRILLE
FS-??	NEW FIRE DAMPER	FS-??	EXISTING FIRE DAMPER
FD??	NEW FIRE DAMPER	FD??	EXISTING FIRE DAMPER
	NEW ZONE COIL		EXISTING ZONE COIL
M	MOTORIZED DAMPER	M	EXISTING MOTORIZED DAMPER
T	THERMOSTAT / TEMPERATURE SENSOR	T	EXISTING THERMOSTAT/ TEMPERATURE SENSOR
	ACCESS DOOR		EXISTING ACCESS DOOR

ABBREVIATIONS

	POINT OF CONNECTION	C.M.	CONSTRUCTION MANAGER
(E)	EXISTING	S.A.	SUPPLY AIR
(N)	NEW	R.A.	RETURN AIR
ALT	ALTERNATE	F.A.	FRESH AIR
G.C.	GENERAL CONTRACTOR	NO	NORMALLY OPEN
M.C.	MECHANICAL CONTRACTOR	NC	NORMALLY CLOSED
E.C.	ELECTRICAL CONTRACTOR	C	COMMON

EQUIPMENT DESIGNATIONS

GRILLES, REGISTERS & DIFFUSERS	CODE; A 150 CFM	HHHP-1	EQUIPMENT DESIGNATIONS WHICH ARE UNDERLINED INDICATES THAT SUCH EQUIPMENT IS SCHEDULED IN THE MECHANICAL EQUIPMENT SCHEDULES
DETAIL DESIGNATION	DETAIL NUMBER; A / M1.1; SHEET DETAIL IS DRAWN ON	SECTION DESIGNATION	A/M3.2; SHEET SECTION IS DRAWN ON; SECTION NUMBER

McGRATH INCORPORATED
ENGINEERING / CONSTRUCTION MANAGEMENT
DENVER / ST LOUIS
A Rodenberg, Bonsall, Scott & Ainsworth Company
5353 WEST DARTMOUTH AVENUE
SUITE 506
DENVER, COLORADO 80227
PH: (303) 969-0220
FAX: (303) 985-5565
1881 CRAIG ROAD
ST. LOUIS, MO 63146
PH: (314) 576-7640
FAX: (314) 576-6440

REV.	DATE	DESCRIPTION	APPROVED

CDG ENGINEERS
CDG Engineers Architects Planners Inc.
One Campbell Plaza
St. Louis, Missouri 63139
www.cdgengineers.com
T. 314 781.7770
F. 314 781.9075

MoDOT

DRAWN BY KLA
CHECKED BY KLA
SCALE AS SHOWN
DATE 05/19/08

HVAC LEGENDS
MISSOURI DEPARTMENT OF TRANSPORTATION
DISTRICT 6 TRAFFIC CONTROL CENTER
14301 SO. OUTER FORTY DR, CHESTERFIELD, MO

PROJECT NO. 08017

DRAWING NO. M-001

ROOFTOP UNIT SCHEDULE

CODE	MANUFACTURER AND MODEL NO.	SERVICE	SUPPLY FAN DATA				EXHAUST FAN DATA			DX COOLING COIL DATA								HEATING SECTION							ELECTRICAL DATA			OPERATING WEIGHT (LBS.)	ACCESSORIES AND REMARKS
			CFM AT ALTITUDE	MINIMUM O.A. CFM	E.S.P. (IN. W.C.) AT S.L.	HP	CFM AT ALTITUDE	E.S.P. (IN. W.C.) AT S.L.	HP	MAXIMUM FACE VEL. (FPM)	MAXIMUM A.P.D. (IN. W.C.)	ENTERING AIR TEMP (°F)		LEAVING AIR TEMP (°F)		CAPACITY (MBH)		TYPE	GAS PRESS. RANGE	ENTERING AIR TEMP (F)		LEAVING AIR TEMP (F)		INPUT (MBH) AT S.L.	VOLTAGE/ PHASE	M.C.A.	M.O.C.P.		
												DB	WB	DB	WB	TOTAL	SENS.			DB	WB	DB	WB						
RTU-1	TRANE SFHFF30	1ST FLOOR	9,000	2,000	1.8"	10	9,000	0.75"	3	400	0.2	81.8	67.4	53.9	53.9	376.6	281.9	NATURAL GAS	7.0" - 14.0"	57.0	-	99.0	-	500.0	460/3	86.42	110	6,786	① ②
RTU-2	TRANE SFHFF40	2ND FLOOR	12,000	4,000	1.8"	15	12,000	0.75"	5	400	0.2	83.7	68.6	54.9	54.9	518.4	386.8	NATURAL GAS	7.0" - 14.0"	50.0	-	103.5	-	850.0	460/3	112.73	125	9,056	① ②

NOTES: ① PROVIDE FACTORY MOUNTED VARIABLE SPEED DRIVES, BACNET COMPATIBLE UNIT CONTROLS, HIGH EFFICIENCY THROWAWAY FILTERS, ECONOMIZER, 100% POWER EXHAUST, FACTORY STARTUP SERVICES, SPACE SENSOR, DUCT STATIC PRESSURE SENSOR AND ONE YEAR WARRANTY FROM STARTUP.

② CUSTOM ROOF CURB ADAPTER WITH INSULATED PLENUM DIVIDERS. ADAPTER CURB SHALL COMPLY WITH ALL SEISMIC CODES.

GRILLES, REGISTERS & DIFFUSER SCHEDULE

CODE	MANUFACTURER AND MODEL NO.	SERVICE	INSTALLATION TYPE	FACE SIZE	NECK SIZE	VOLUME DAMPER	FINISH	MATERIAL	ACCESSORIES AND REMARKS
Ⓐ	TITUS PAS	SUPPLY	LAY-IN	24"x24"	8"Φ	NO	WHITE	STEEL	
Ⓑ	TITUS PAR	RETURN	LAY-IN	24"x24"	22"x22"	NO	WHITE	STEEL	
Ⓒ	TITUS PAS	SUPPLY	LAY-IN	24"x24"	16"Φ	NO	WHITE	STEEL	

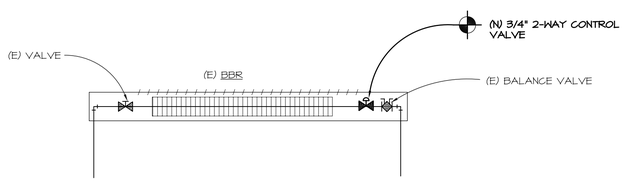

2 / M-002 BBR WITH 2-WAY VALVE DETAIL

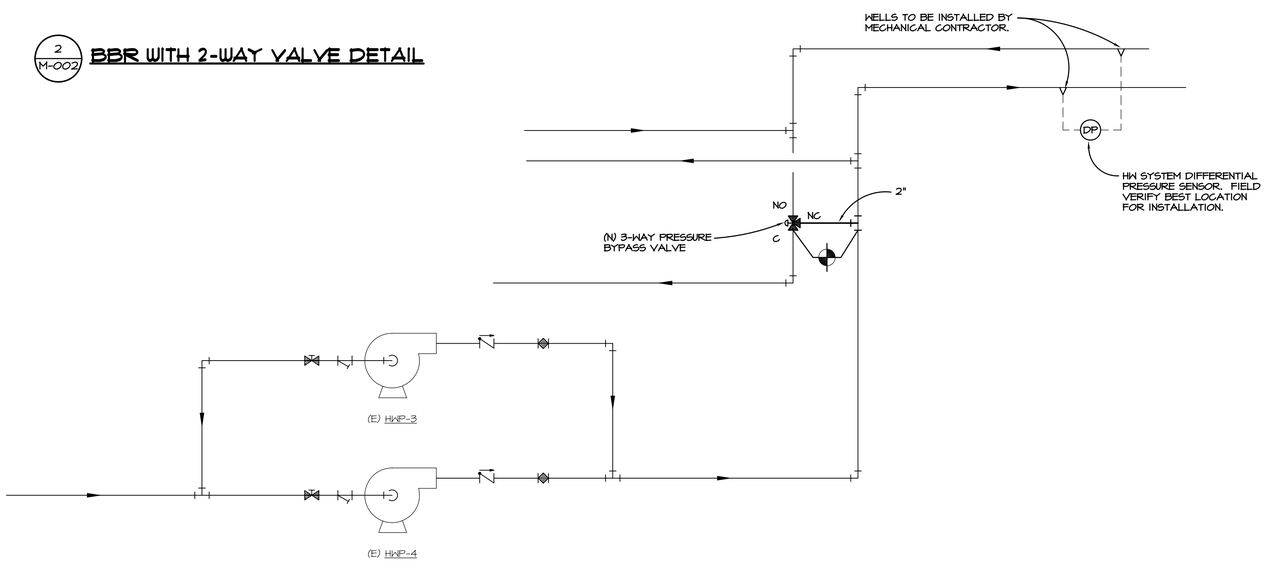

1 / M-002 3-WAY VALVE DETAIL

McGRATH INCORPORATED | ENGINEERING / CONSTRUCTION MANAGEMENT DENVER / ST. LOUIS

5353 WEST DARTMOUTH AVENUE
SUITE 506
DENVER, COLORADO 80227
PH: (303) 969-0220
FAX: (303) 985-5565

1881 CRAIG ROAD
ST. LOUIS, MO 63146
PH: (314) 576-7640
FAX: (314) 576-6440

A Rodenberg, Bonsall, Scott & Ainsworth Company

REV.	DATE	DESCRIPTION	APPROVED

CDG ENGINEERS
CDG Engineers Architects Planners Inc.
One Campbell Plaza
St. Louis, Missouri 63139
www.cdgengineers.com
T. 314 781.7770
F. 314 781.9075

MoDOT

DRAWN BY KLA

CHECKED BY KLA

SCALE AS SHOWN

DATE 05/19/08

HVAC SCHEDULES AND DETAILS
MISSOURI DEPARTMENT OF TRANSPORTATION
DISTRICT 6 TRAFFIC CONTROL CENTER
14301 SO. OUTER FORTY DR, CHESTERFIELD, MO

PROJECT NO. 08017

DRAWING NO. M-002

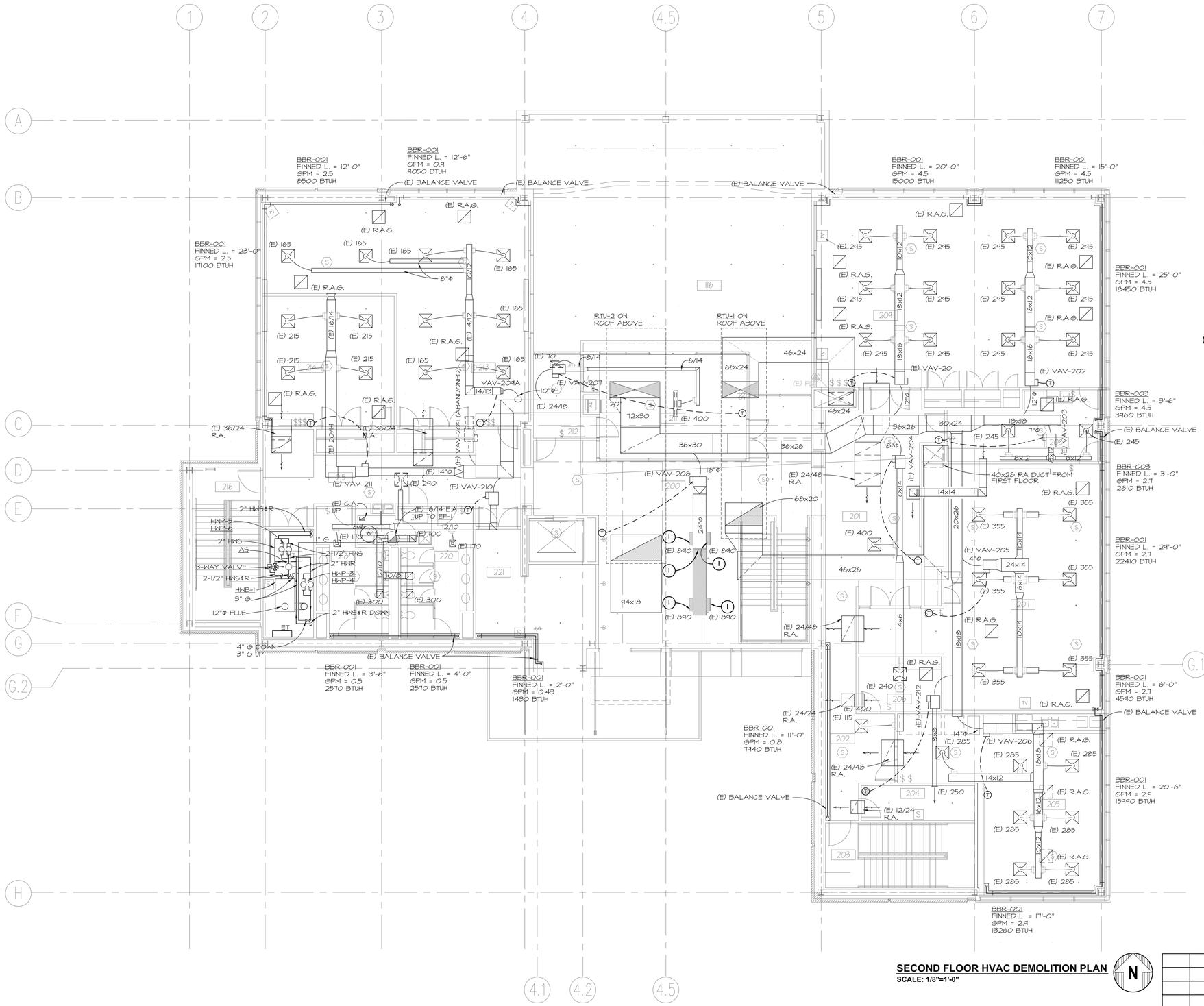

GENERAL NOTES

1. IN THE EVENT THE CONTRACTOR ENCOUNTERS WHAT HE SUSPECTS TO BE ASBESTOS, HE SHALL STOP WORK AND CONTACT THE OWNER/ARCHITECT IMMEDIATELY.
2. REMOVE FROM THE PROJECT SITE ALL EQUIPMENT, PIPING AND DUCTWORK SHOWN SHADED.
3. CONTRACTOR SHALL NOT SHUT-OFF / PUT OUT OF SERVICE ANY SYSTEMS / SERVICE WITHOUT FIRST COORDINATING 7 DAYS IN ADVANCE WITH OWNER.
4. CONTRACTOR IS RESPONSIBLE FOR FIELD VERIFICATION OF ALL CONDITIONS PRIOR TO COMMENCEMENT OF ANY WORK AND SHALL NOTIFY THE ENGINEER OF ANY DISCREPANCIES FOR RESOLUTIONS.
5. EXISTING PIPING AND DUCTWORK SHOWN LIGHT LINE WEIGHT. NEW DUCTWORK AND PIPING SHOWN HEAVY LINE WEIGHT.
6. FLEXIBLE DUCT NOT TO EXCEED 6'-0" IN LENGTH.
7. DUCT SIZES SHOWN ARE CLEAR INSIDE DIMENSIONS.
8. PROVIDE SINGLE VANES ON ALL SUPPLY DUCT ELBOWS.

KEY NOTES:

1. CAP DUCT WITH SHEET METAL PLATE AND SEAL AIR TIGHT.

SECOND FLOOR HVAC DEMOLITION PLAN
SCALE: 1/8"=1'-0"

N

McGRATH INCORPORATED
ENGINEERING / CONSTRUCTION MANAGEMENT
DENVER / ST. LOUIS
A Rodenberg, Bonsall, Scott & Ainsworth Company

5353 WEST DARTMOUTH AVENUE
SUITE 506
DENVER, COLORADO 80227
PH: (303) 969-0220
FAX: (303) 985-5565

1881 CRAIG ROAD
ST. LOUIS, MO 63146
PH: (314) 576-7640
FAX: (314) 576-6440

REV.	DATE	DESCRIPTION	APPROVED

CDG ENGINEERS
CDG Engineers Architects Planners Inc.
One Campbell Plaza
St. Louis, Missouri 63139
www.cdgengineers.com
T. 314 781.7770
F. 314 781.9075

MoDOT

DRAWN BY
KLA

CHECKED BY
KLA

SCALE
AS SHOWN

DATE
05/19/08

SECOND FLOOR HVAC DEMOLITION PLAN
MISSOURI DEPARTMENT OF TRANSPORTATION
DISTRICT 6 TRAFFIC CONTROL CENTER
14301 SO. OUTER FORTY DR, CHESTERFIELD, MO

PROJECT NO.
08017

DRAWING NO.
M-202

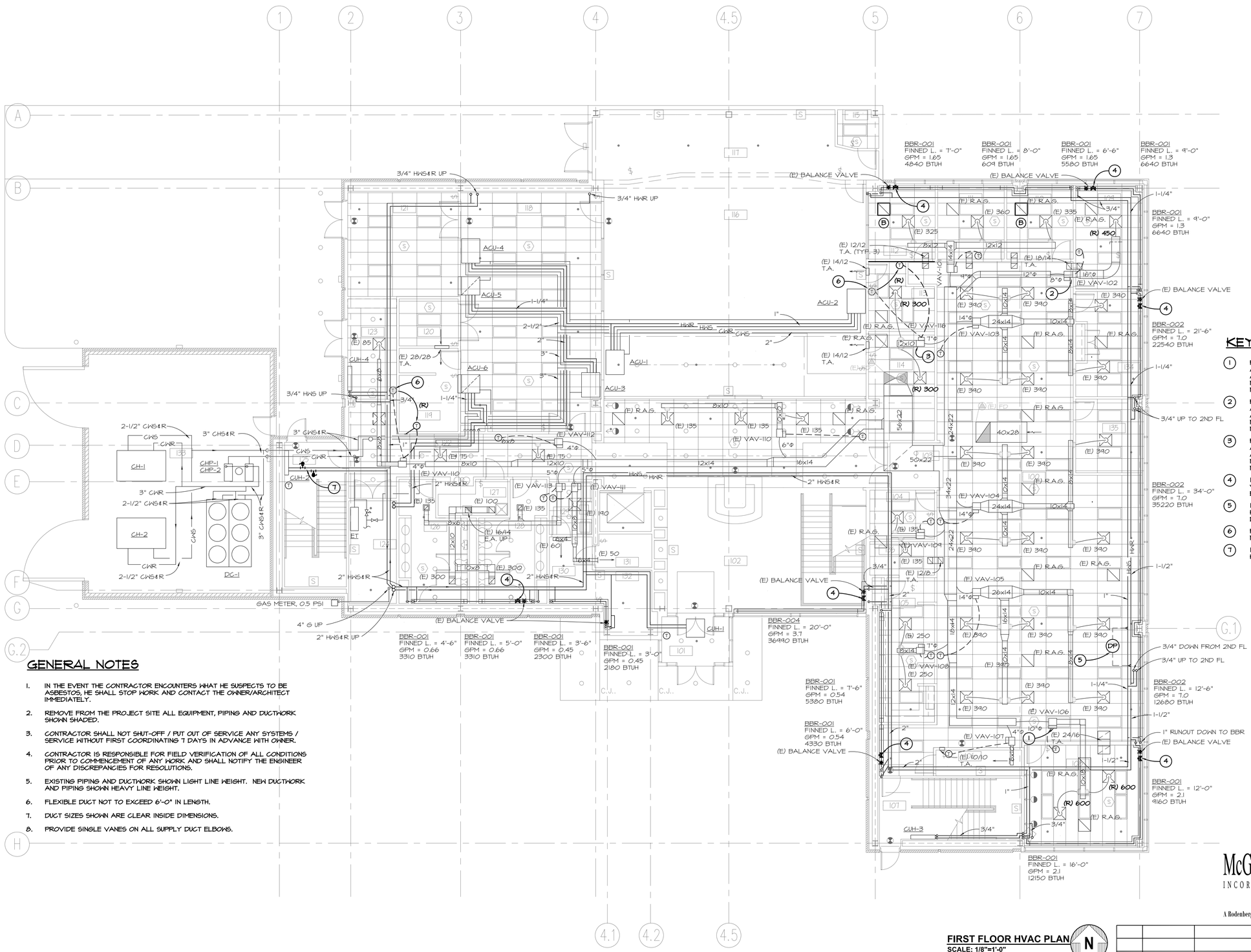

KEY NOTES:

1. RECALIBRATE EXISTING VAV-106 AIR FLOW SETTINGS AS FOLLOWS AND REBALANCE AIR DEVICES IN ROOM AS SHOWN:
   MAX. CFM = 1200
   MIN. CFM = 360
2. RECALIBRATE EXISTING VAV-102 AIR FLOW SETTINGS AS FOLLOWS AND REBALANCE AIR DEVICES IN ROOM AS SHOWN:
   MAX. CFM = 450
   MIN. CFM = 200
3. RECALIBRATE EXISTING VAV-116 AIR FLOW SETTINGS AS FOLLOWS AND REBALANCE AIR DEVICES IN ROOM AS SHOWN:
   MAX. CFM = 600
   MIN. CFM = 0
4. INSTALL NEW 2-WAY HEATING HOT WATER CONTROL VALVE ON HWR PIPING AND UPSTREAM OF EXISTING BALANCE VALVE. RE: DETAIL #2 SHEET M-002.
5. INSTALL NEW PRESSURE DIFFERENTIAL SENSOR IN HEATING HOT WATER AT THIS LOCATION OR AS DETERMINED IN THE FIELD.
6. REMOVE EXISTING THERMOSTAT AND REINSTALL IN NEW LOCATION AS INDICATED.
7. INSTALL NEW 3/4" HOSE END DRAIN VALVES ON HWS&R PIPING SERVING EXISTING CUH-2

GENERAL NOTES

1. IN THE EVENT THE CONTRACTOR ENCOUNTERS WHAT HE SUSPECTS TO BE ASBESTOS, HE SHALL STOP WORK AND CONTACT THE OWNER/ARCHITECT IMMEDIATELY.
2. REMOVE FROM THE PROJECT SITE ALL EQUIPMENT, PIPING AND DUCTWORK SHOWN SHADED.
3. CONTRACTOR SHALL NOT SHUT-OFF / PUT OUT OF SERVICE ANY SYSTEMS / SERVICE WITHOUT FIRST COORDINATING 7 DAYS IN ADVANCE WITH OWNER.
4. CONTRACTOR IS RESPONSIBLE FOR FIELD VERIFICATION OF ALL CONDITIONS PRIOR TO COMMENCEMENT OF ANY WORK AND SHALL NOTIFY THE ENGINEER OF ANY DISCREPANCIES FOR RESOLUTIONS.
5. EXISTING PIPING AND DUCTWORK SHOWN LIGHT LINE WEIGHT. NEW DUCTWORK AND PIPING SHOWN HEAVY LINE WEIGHT.
6. FLEXIBLE DUCT NOT TO EXCEED 6'-0" IN LENGTH.
7. DUCT SIZES SHOWN ARE CLEAR INSIDE DIMENSIONS.
8. PROVIDE SINGLE VANES ON ALL SUPPLY DUCT ELBOWS.

FIRST FLOOR HVAC PLAN
SCALE: 1/8"=1'-0"

N

REV.	DATE	DESCRIPTION	APPROVED

McGRATH INCORPORATED
ENGINEERING / CONSTRUCTION MANAGEMENT
DENVER / ST. LOUIS
A Rodenberg, Bonsall, Scott & Ainsworth Company
5353 WEST DARTMOUTH AVENUE
SUITE 506
DENVER, COLORADO 80227
PH: (303) 969-0220
FAX: (303) 985-5565
1881 CRAIG ROAD
ST. LOUIS, MO 63146
PH: (314) 576-7640
FAX: (314) 576-6440

CDG ENGINEERS
CDG Engineers Architects Planners Inc.
One Campbell Plaza
St. Louis, Missouri 63139
www.cdgengineers.com
T. 314 781.7770
F. 314 781.9075

MoDOT

DRAWN BY
KLA

CHECKED BY
KLA

SCALE
AS SHOWN

DATE
05/19/08

FIRST FLOOR HVAC PLAN
MISSOURI DEPARTMENT OF TRANSPORTATION
DISTRICT 6 TRAFFIC CONTROL CENTER
14301 SO. OUTER FORTY DR, CHESTERFIELD, MO

PROJECT NO.
08017

DRAWING NO.
M-301

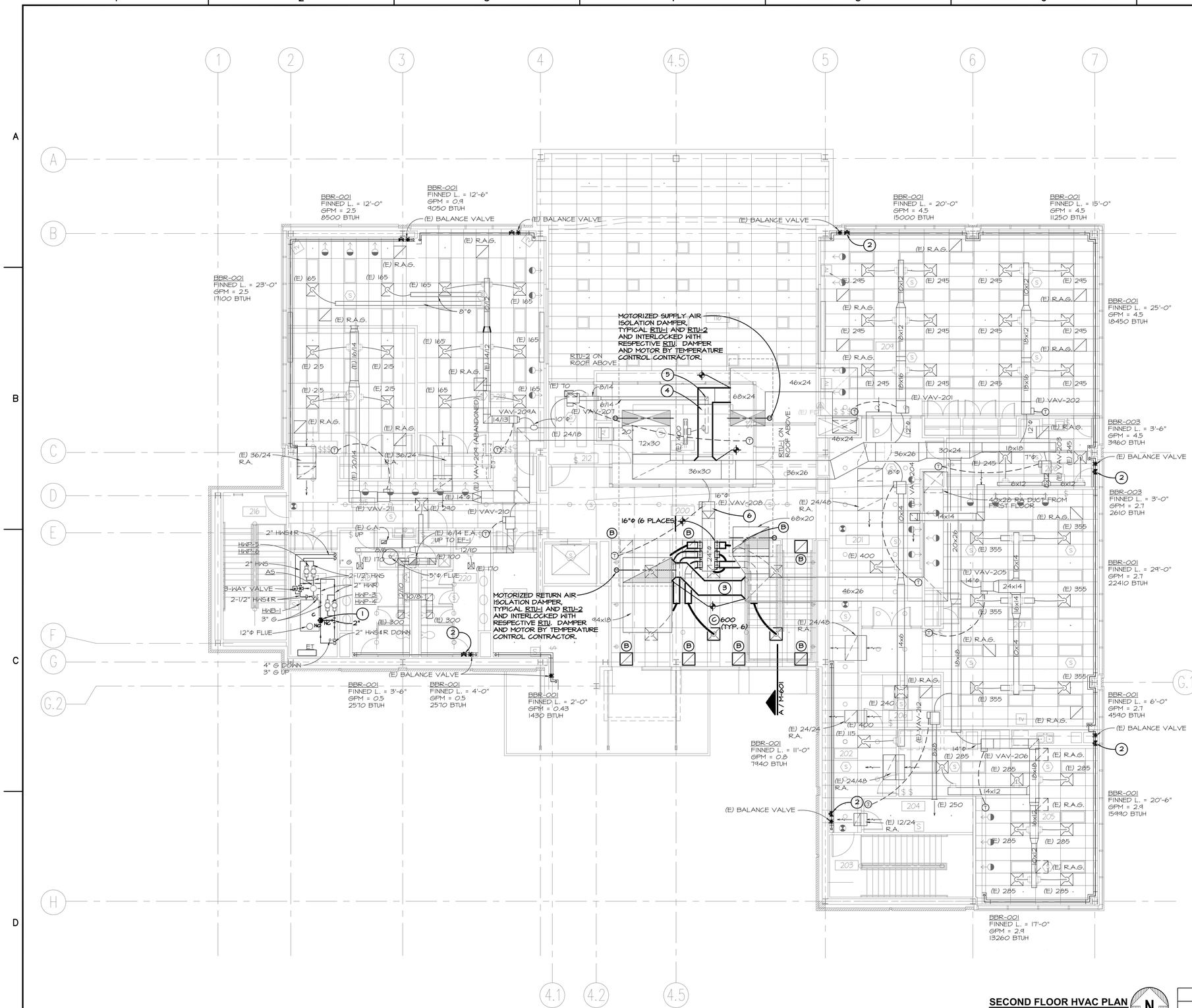

GENERAL NOTES

1. IN THE EVENT THE CONTRACTOR ENCOUNTERS WHAT HE SUSPECTS TO BE ASBESTOS, HE SHALL STOP WORK AND CONTACT THE OWNER/ARCHITECT IMMEDIATELY.
2. REMOVE FROM THE PROJECT SITE ALL EQUIPMENT, PIPING AND DUCTWORK SHOWN SHADED.
3. CONTRACTOR SHALL NOT SHUT-OFF / PUT OUT OF SERVICE ANY SYSTEMS / SERVICE WITHOUT FIRST COORDINATING 7 DAYS IN ADVANCE WITH OWNER.
4. CONTRACTOR IS RESPONSIBLE FOR FIELD VERIFICATION OF ALL CONDITIONS PRIOR TO COMMENCEMENT OF ANY WORK AND SHALL NOTIFY THE ENGINEER OF ANY DISCREPANCIES FOR RESOLUTIONS.
5. EXISTING PIPING AND DUCTWORK SHOWN LIGHT LINE WEIGHT. NEW DUCTWORK AND PIPING SHOWN HEAVY LINE WEIGHT.
6. FLEXIBLE DUCT NOT TO EXCEED 6'-0" IN LENGTH.
7. DUCT SIZES SHOWN ARE CLEAR INSIDE DIMENSIONS.
8. PROVIDE SINGLE VANES ON ALL SUPPLY DUCT ELBOWS.

KEY NOTES:

1. INSTALL NEW 3-WAY HEATING HOT WATER CONTROL VALVE ON HWR PIPING OF EXISTING BBR SYSTEM. RE: DETAIL #1 SHEET M-002.
2. INSTALL NEW 2-WAY HEATING HOT WATER CONTROL VALVE ON HWR PIPING AND UPSTREAM OF EXISTING BALANCE VALVE. RE: DETAIL #2 SHEET M-002.
3. 30/30 RETURN AIR CROSS-CONNECT DUCT INSTALLED BETWEEN RTU-1 AND RTU-2 RETURN AIR SYSTEMS. DO NOT INSTALL TURNING VANES IN CROSSOVER DUCT FITTINGS AND REMOVE EXISTING VANES IN EXISTING DUCT SYSTEMS BEING CONNECTED TO.
4. 28/28 SUPPLY AIR CROSS-CONNECT DUCT INSTALLED BETWEEN RTU-1 AND RTU-2 SUPPLY AIR SYSTEMS. DO NOT INSTALL TURNING VANES IN CROSSOVER DUCT FITTINGS. WRAP WITH 1-1/2" THICK FIBERGLASS INSULATION WITH A CONTINUOUS VAPOR BARRIER.
5. MODIFY EXISTING LP SUPPLY DUCT AS NECESSARY TO ACCOMMODATE INSTALL OF CROSSOVER DUCT.
6. REBALANCE EXISTING VAV-208 AS FOLLOWS: AND REBALANCE AIR DEVICES IN ROOM AS SHOWN: MAX. CFM = 3600 MIN. CFM = 0

SECOND FLOOR HVAC PLAN
SCALE: 1/8"=1'-0"

REV.	DATE	DESCRIPTION	APPROVED

McGRATH INCORPORATED
ENGINEERING / CONSTRUCTION MANAGEMENT
DENVER / ST. LOUIS
A Rodenberg, Bonsall, Scott & Ainsworth Company
5353 WEST DARTMOUTH AVENUE
SUITE 506
DENVER, COLORADO 80227
PH: (303) 969-0220
FAX: (303) 985-5565
1881 CRAIG ROAD
ST. LOUIS, MO 63146
PH: (314) 576-7640
FAX: (314) 576-6440

CDG ENGINEERS
CDG Engineers Architects Planners Inc.
One Campbell Plaza
St. Louis, Missouri 63139
www.cdgengineers.com
T. 314 781.7770
F. 314 781.9075

MoDOT

DRAWN BY KLA
CHECKED BY KLA
SCALE AS SHOWN
DATE 05/19/08

SECOND FLOOR HVAC PLAN
MISSOURI DEPARTMENT OF TRANSPORTATION
DISTRICT 6 TRAFFIC CONTROL CENTER
14301 SO. OUTER FORTY DR, CHESTERFIELD, MO

PROJECT NO. 08017

DRAWING NO. M-302

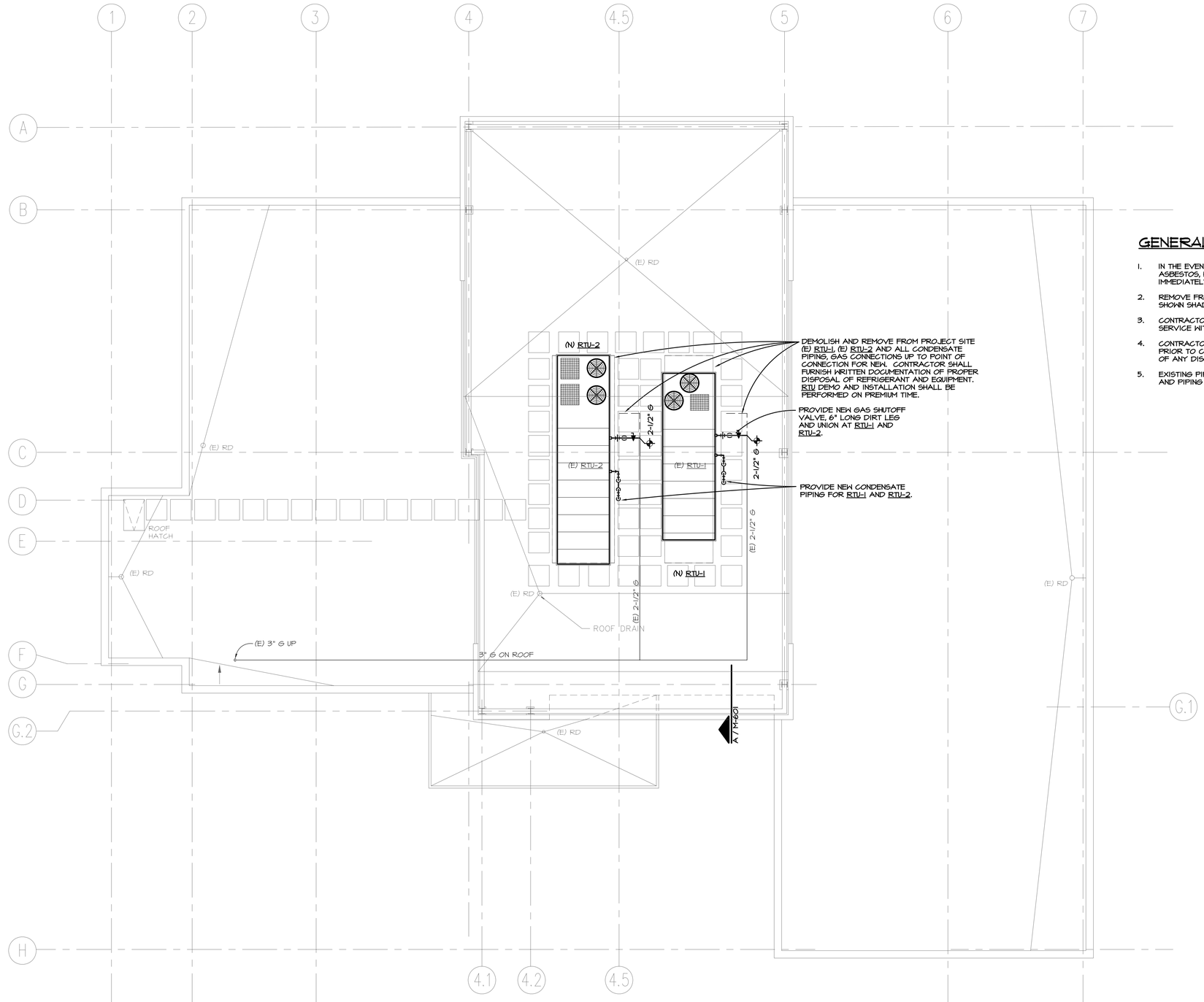

DEMOLISH AND REMOVE FROM PROJECT SITE (E) RTU-1, (E) RTU-2 AND ALL CONDENSATE PIPING, GAS CONNECTIONS UP TO POINT OF CONNECTION FOR NEW. CONTRACTOR SHALL FURNISH WRITTEN DOCUMENTATION OF PROPER DISPOSAL OF REFRIGERANT AND EQUIPMENT. RTU DEMO AND INSTALLATION SHALL BE PERFORMED ON PREMIUM TIME.

PROVIDE NEW GAS SHUTOFF VALVE, 6" LONG DIRT LEG AND UNION AT RTU-1 AND RTU-2.

PROVIDE NEW CONDENSATE PIPING FOR RTU-1 AND RTU-2.

GENERAL NOTES

1. IN THE EVENT THE CONTRACTOR ENCOUNTERS WHAT HE SUSPECTS TO BE ASBESTOS, HE SHALL STOP WORK AND CONTACT THE OWNER/ARCHITECT IMMEDIATELY.
2. REMOVE FROM THE PROJECT SITE ALL EQUIPMENT, PIPING AND DUCTWORK SHOWN SHADED.
3. CONTRACTOR SHALL NOT SHUT-OFF / PUT OUT OF SERVICE ANY SYSTEMS / SERVICE WITHOUT FIRST COORDINATING 7 DAYS IN ADVANCE WITH OWNER.
4. CONTRACTOR IS RESPONSIBLE FOR FIELD VERIFICATION OF ALL CONDITIONS PRIOR TO COMMENCEMENT OF ANY WORK AND SHALL NOTIFY THE ENGINEER OF ANY DISCREPANCIES FOR RESOLUTIONS.
5. EXISTING PIPING AND DUCTWORK SHOWN LIGHT LINE WEIGHT. NEW DUCTWORK AND PIPING SHOWN HEAVY LINE WEIGHT.

ROOF HVAC PLAN
SCALE: 1/8"=1'-0"

N

McGRATH INCORPORATED
A Rodenberg, Bonsall, Scott & Ainsworth Company
ENGINEERING / CONSTRUCTION MANAGEMENT
DENVER / ST. LOUIS
5353 WEST DARTMOUTH AVENUE
SUITE 506
DENVER, COLORADO 80227
PH: (303) 969-0220
FAX: (303) 985-5565
1881 CRAIG ROAD
ST. LOUIS, MO 63146
PH: (314) 576-7640
FAX: (314) 576-6440

REV.	DATE	DESCRIPTION	APPROVED

CDG ENGINEERS
CDG Engineers Architects Planners Inc.
One Campbell Plaza
St. Louis, Missouri 63139
www.cdgengineers.com
T. 314 781.7770
F. 314 781.9075

MoDOT

DRAWN BY KLA
CHECKED BY KLA
SCALE AS SHOWN
DATE 05/19/08

ROOF HVAC PLAN
MISSOURI DEPARTMENT OF TRANSPORTATION
DISTRICT 6 TRAFFIC CONTROL CENTER
14301 SO. OUTER FORTY DR, CHESTERFIELD, MO

PROJECT NO. 08017
DRAWING NO. M-401

FIRE PROTECTION SPECIFICATIONS

1. FIRE PROTECTION CONTRACTOR SHALL MODIFY SPRINKLER HEAD LOCATIONS TO MATCH NEW ARCHITECTURAL LAYOUT OF WALLS, FOR THE PROJECT AREA SHOWN. THE FIRE SPRINKLER SYSTEM IS EXISTING. NEW WORK SHALL COMPLY WITH DESIGN REQUIREMENTS AS DESCRIBED BELOW./
2. SYSTEM DESIGN REQUIREMENTS:

   A. VERIFY REQUIREMENTS WITH JURISDICTIONAL AUTHORITIES. PROVIDE SYSTEM COMPLETE, FUNCTIONAL AND ACCEPTABLE TO INSURANCE CARRIER WITHOUT PENALTY OF ANY TYPE TO THE INSURANCE PREMIUM RATE.

   B. SYSTEM SHALL BE PIPED SCHEDULED PER NFPA.
3. CONTRACTOR SHALL SUBMIT SHOP DRAWINGS AND CALCULATIONS TO BE REVIEWED AND ACCEPTED BY LOCAL FIRE DEPARTMENT AND THE ENGINEER.
4. PIPE AND JOINTS SHALL BE BLACK STEEL AND GALVANIZED STEEL THREADED OR ROLL GROOVED SCHEDULE 40 CONFORMING TO ANSI/ASTM A-135 AS FOLLOWS: SCHEDULE 10 FOR SIZES UP TO 5", 300 PSI MAXIMUM SYSTEM PRESSURE. ALL PIPE SHALL CONFORM TO NFPA #13, CHAPTER 3.
5. CONTRACTOR SHALL COMPLETE THE AUTOMATIC FIRE SPRINKLER READY FOR OPERATION, IN ALL RESPECTS, AS SOON AS POSSIBLE. WHEN SYSTEM IS COMPLETE AND READY FOR CONTINUOUS OPERATION, ACTIVATE THE SYSTEM FOR ITS' INTENDED USE.
6. SPRINKLER HEADS SHALL MATCH EXISTING HEAD TYPE AND SHALL BE ALIGNED IN A SYMMETRICAL PATTERN (BOTH WAYS).
7. FIRE PROTECTION CONTRACTOR SHALL COORDINATE THE LOCATION OF ALL NEW FIRE PROTECTION EQUIPMENT AND PIPING WITH ALL OTHER TRADES PRIOR TO SUBMITTAL OF SHOP DRAWINGS AND SYSTEM INSTALLATION, SO AS NOT TO INTERFERE WITH THE ROUTING OF NEW DUCTWORK, PLUMBING PIPING, ETC.
8. SEAL ALL PIPE PENETRATIONS THROUGH FIRE RATED WALLS AND CEILINGS WITH APPROVED FIRE STOP MATERIALS AS REQUIRED.
9. PROVIDE ALL FITTINGS, RISER NIPPLES, ARM-OVERS, HANGERS, ETC. TO MAINTAIN CONFORMANCE WITH APPLICABLE STANDARDS AND TO POSITION THE SPRINKLER HEADS IN THE PROPER LOCATIONS.
10. THIS CONTRACTOR IS RESPONSIBLE FOR FIELD VERIFICATION OF ALL EXISTING CONDITIONS PRIOR TO PURCHASE OF ANY MATERIALS AND THE COMMENCEMENT OF ANY WORK. CONTRACTOR SHALL NOTIFY THE CONSTRUCTION MANAGER OF ANY DISCREPANCIES FOR RESOLUTION.
11. CONTRACTOR SHALL PROVIDE "AS CONSTRUCTED" (AS-BUILT) DRAWINGS WITHIN (14) DAYS OF COMPLETION OF PROJECT.

GENERAL NOTES

1. FURNISH ALL LABOR, MATERIALS, EQUIPMENT AND SERVICES NECESSARY FOR THE INSTALLATION OF A COMPLETE AND PROPERLY FUNCTIONING FIRE PROTECTION SYSTEM
2. THE INFORMATION PRESENTED ON THESE DRAWINGS IS DIAGRAMMATIC. IT DOES NOT NECESSARILY REPRESENT ALL ELBOWS, OFFSETS, HANGERS, ETC., REQUIRED FOR A COMPLETE WORKING SYSTEM.
3. ALL FIRE PROTECTION SYSTEMS INSTALLED SHALL BE IN ACCORDANCE WITH NFPA-13 AND LOCAL BUILDING CODES AND ORDINANCES.
4. FIRE PROTECTION CONTRACTOR SHALL COORDINATE THE LOCATION OF ALL NEW FIRE PROTECTION EQUIPMENT AND PIPING WITH ALL OTHER TRADES PRIOR TO SUBMITTAL OF SHOP DRAWINGS AND SYSTEM INSTALLATION, SO AS NOT TO INTERFERE WITH THE ROUTING OF NEW DUCTWORK, PLUMBING PIPING, ETC.
5. SEAL ALL PIPE PENETRATIONS THROUGH FIRE RATED WALLS AND WITH APPROVED FIRE PROOF MATERIALS AS REQUIRED.
6. PROVIDE ALL FITTINGS, RISER NIPPLES, ARM-OVERS, HANGERS, ETC. TO MAINTAIN CONFORMANCE WITH APPLICABLE STANDARDS AND TO POSITION THE SPRINKLER HEADS IN THE PROPER LOCATIONS.
7. PROVIDE FIELD COORDINATION OF PIPING AND SPRINKLER HEAD INSTALLATIONS WITH LIGHTS, SMOKE DETECTORS, SPEAKERS, AND DIFFUSERS.

KEY NOTES (FIRE PROTECTION):

1. REMOVE EXISTING FIRE PROTECTION HEAD AND REINSTALL IN NEW GRID CEILING CENTERED AND AT ELEVATION PER ARCHITECTURAL CEILING PLANS. FURNISH NEW PIPING AND FIRE PROTECTION HEAD AS NECESSARY.

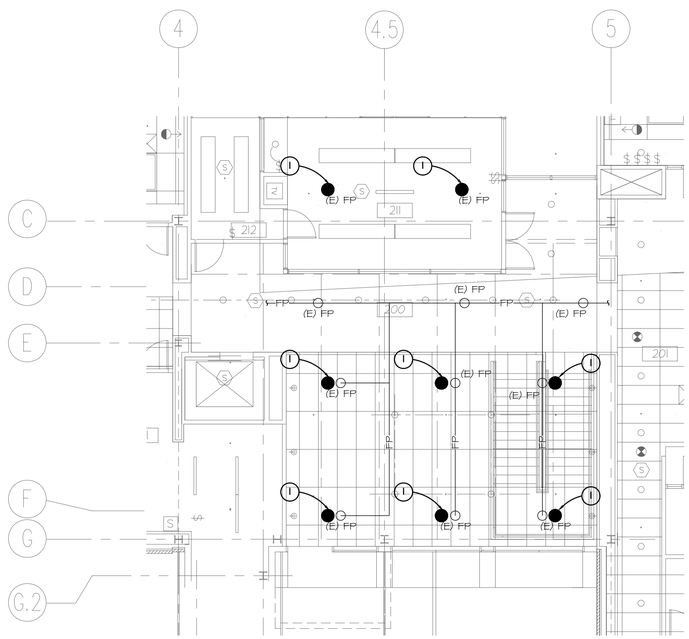

2 / M-501 **PARTIAL SECOND FLOOR FIRE PROTECTION PLAN**
SCALE: 1/8"=1'-0"

KEY NOTES (ELECTRICAL):

1. REMOVE EXISTING PENDANT LIGHT FIXTURE. BRANCH CIRCUIT WIRING SHALL REMAIN FOR EXTENSION TO NEW LIGHTS.
2. REMOVE EXISTING SMOKE DETECTOR AND REINSTALL CENTERED IN NEW GRID CEILING. EXTEND FIRE ALARM WIRING AS REQUIRED.
3. NEW 2'-0" X 4'-0, FOUR LAMP CEILING LIGHT FURNISHED MDOT AND INSTALLED BY ELECTRICAL CONTRACTOR IN NEW GRID CEILING. EXTEND EXISTING BRANCH CIRCUIT WIRING FOR CONNECTION OF NEW LIGHT AS REQUIRED.
4. REMOVE EXISTING LIGHT FIXTURES AND SPEAKER TO ACCOMMODATE NEW GRID CEILING AND DUCT INSTALLATION. REINSTALL LIGHTS AND RECONNECT WIRING AS REQUIRED.
5. REMOVE EXISTING LIGHT FIXTURES, TERMINATE WIRING AND PROVIDE COVER PLATE.

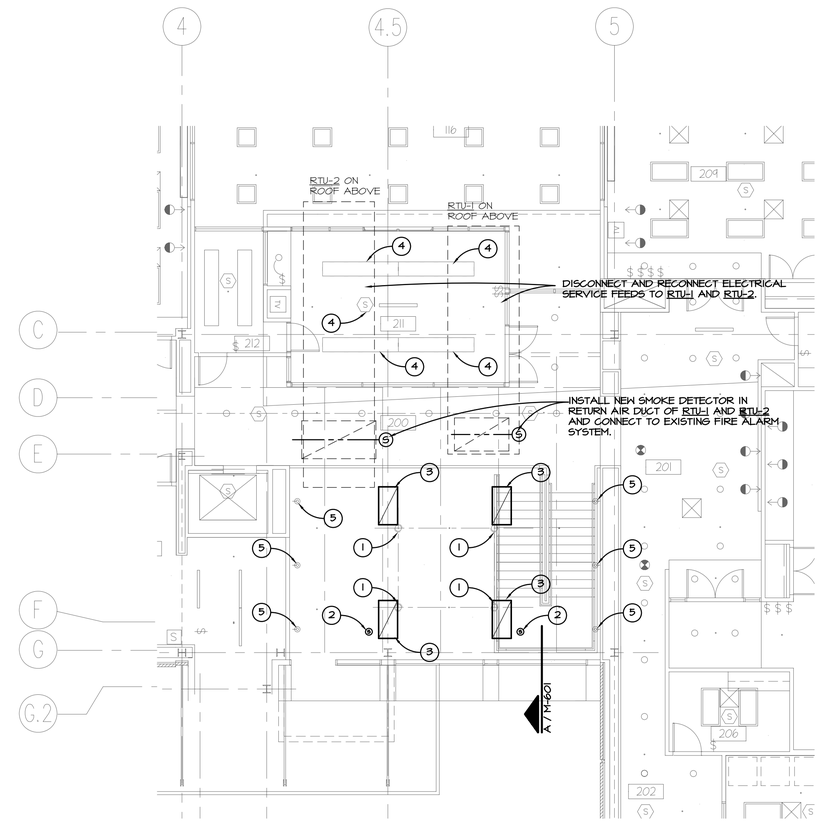

1 / M-501 **PARTIAL SECOND FLOOR ELECTRICAL PLAN**
SCALE: 1/8"=1'-0"

McGRATH INCORPORATED
A Rodenberg, Bonsall, Scott & Ainsworth Company
ENGINEERING / CONSTRUCTION MANAGEMENT
DENVER / ST. LOUIS
5353 WEST DARTMOUTH AVENUE
SUITE 506
DENVER, COLORADO 80227
PH: (303) 969-0220
FAX: (303) 985-5565
1881 CRAIG ROAD
ST. LOUIS, MO 63146
PH: (314) 576-7640
FAX: (314) 576-6440

REV.	DATE	DESCRIPTION	APPROVED

CDG ENGINEERS
CDG Engineers Architects Planners Inc.
One Campbell Plaza
St. Louis, Missouri 63139
www.cdgengineers.com
T. 314 781.7770
F. 314 781.9075

MoDOT

DRAWN BY KLA
CHECKED BY KLA
SCALE AS SHOWN
DATE 05/19/08

PARTIAL SECOND FLOOR FIRE & ELEC. PLANS
MISSOURI DEPARTMENT OF TRANSPORTATION
DISTRICT 6 TRAFFIC CONTROL CENTER
14301 SO. OUTER FORTY DR, CHESTERFIELD, MO

PROJECT NO. 08017
DRAWING NO. M-501

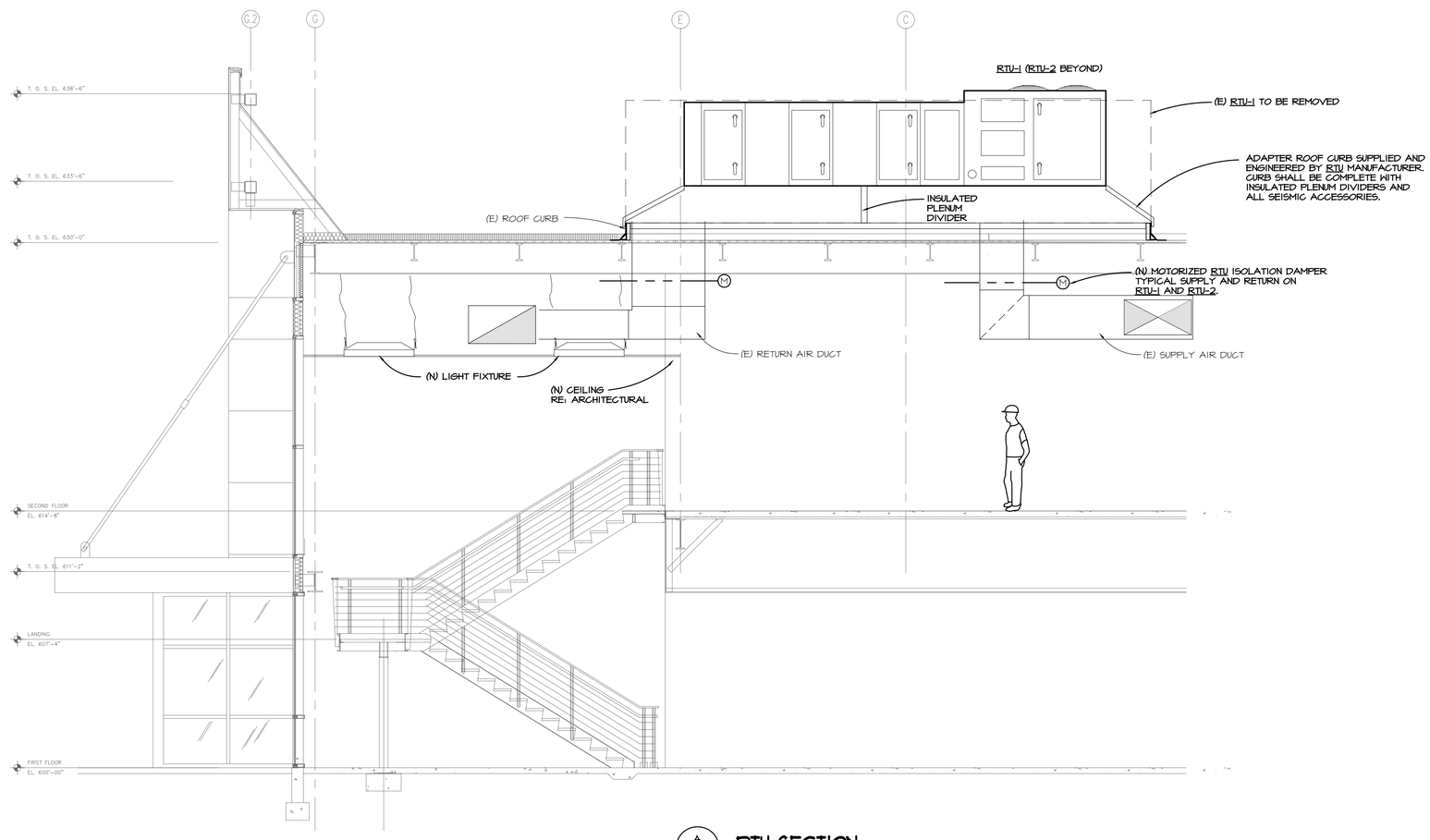

A
M-601

RTU SECTION

SCALE: 1/4" = 1'-0"

McGRATH INCORPORATED

A Rodenberg, Bonsall, Scott & Ainsworth Company

ENGINEERING / CONSTRUCTION MANAGEMENT
DENVER / ST. LOUIS

5353 WEST DARTMOUTH AVENUE
SUITE 506
DENVER, COLORADO 80227
PH: (303) 969-0220
FAX: (303) 985-5565

1881 CRAIG ROAD
ST. LOUIS, MO 63146
PH: (314) 576-7640
FAX: (314) 576-6440

REV.	DATE	DESCRIPTION	APPROVED

CDG ENGINEERS
CDG Engineers Architects Planners Inc.
One Campbell Plaza
St. Louis, Missouri 63139
www.cdgengineers.com
T. 314 781.7770
F. 314 781.9075

MoDOT

DRAWN BY
KLA

CHECKED BY
KLA

SCALE
AS SHOWN

DATE
05/19/08

HVAC SECTIONS
MISSOURI DEPARTMENT OF TRANSPORTATION
DISTRICT 6 TRAFFIC CONTROL CENTER
14301 SO. OUTER FORTY DR, CHESTERFIELD, MO

PROJECT NO.
08017

DRAWING NO.
M-601